WTC
Drawing Book 1

1-AB0-0
through
1-AB3-56

WTCI-11-LERA

DRILLING, HELLE, CHRISTIANSEN, ROBERTSON — Structural & Civil Engineers

PROJECT: THE WORLD TRADE CENTER

TITLE: DRAWING BOOK 1 - EXTERIOR WALL TO EL. 363

DATE: 10/ 6/72

REVISIONS: PRINTED 5/18/73

1-AB0- 0	5/18/73
1-AB0- 0.1	5/18/73
1-A2- 0	5/ 1/69
1-A2- 1	9/ 1/67
1-A2- 2	2/15/68
1-A2- 3	1/26/68
1-A2- 4	1/10/68
1-A2- 5	1/26/68
1-A2- 6	9/15/67
1-A2- 7	2/15/68
1-A2- 8	2/15/68
1-A2- 9	3-15-67
1-A2- 10	3-15-67
1-A2- 11	3-15-67
1-A2- 12	2/15-68
1-A2- 13	3-15-67
1-A2- 14	3-15-67
1-A2- 15	3-15-67
1-A2- 16	5-08-67
1-A2- 17	3-15-67
1-A2- 18	4-24-67
1-A2- 19	4-24-67
1-A2- 20	4-24-67
1-A2- 21	4-24-67
1-A2- 22	4-24-67
1-A2- 23	2/15/68
1-A2- 24	3-15-67
1-A2- 25	3-15-67
1-A2- 26	3-15-67
1-A2- 27	3-15-67
1-A2- 28	3-15-67
1-A2- 29	3-15-67
1-A2- 30	3-15-67
1-A2- 31	4-24-67
1-A2- 32	4-24-67
1-A2- 33	3-15-67
1-A2- 34	3-15-67
1-A2- 35	3-15-67
1-A2- 36	3-15-67
1-A2- 37	3-15-67
1-A2- 38	1/26/68
1-A2- 39	7/17/68
1-A2- 40	1/26/68
1-A2- 41	3-15-67
1-A2- 42	3-15-67
1-A2- 43	3-15-67
1-A2- 44	3-15-67
1-A2- 45	3-15-67
1-A2- 46	1/10/68
1-A2- 47	3-15-67
1-A2- 48	3-15-67
1-A2- 49	3-15-67
1-A2- 50	3-15-67
1-A2- 51	3-15-67
1-A2- 52	3-15-67
1-A2- 53	3-15-67
1-A2- 54	3-15-67
1-A2- 55	3-15-67
1-A2- 56	4-24-67
1-A2- 57	3-15-67
1-A2- 58	4-24-67
1-A2- 59	3-15-67
1-A2- 60	3-15-67
1-A2- 61	3-15-67
1-A2- 62	3-15-67
1-A2- 63	3-15-67
1-A2- 64	3-15-67
1-A2- 65	3-15-67
1-A2- 66	3-15-67
1-A2- 67	1/10/68
SA- 125	4- 7-67
SA- 126	5-08-67
SA- 127	4- 7-67
SA- 128	5/ 8/71
1-B2- 0	5/ 1/69
1-B2- 1	2/19/68
1-B2- 2	6/18/68
1-B2- 3	12/18/68
1-B2- 4	12/18/68
1-B2- 5	2/19/68
1-B2- 6	2/19/68
1-B2- 7	6/18/68
1-B2- 8	6/18/68
1-B2- 9	2/19/68
1-B2- 10	5-08-67
1-B2- 11	4-24-67
1-B2- 12	2/15/68
1-B2- 13	4-24-67
1-B2- 14	2/15/68
1-B2- 15	4-24-67
1-B2- 16	2/15/68
1-B2- 17	4-24-67
1-B2- 18	4-24-67
1-B2- 19	6/18/68
1-B2- 20	3-31-67
1-B2- 21	3-31-67
1-B2- 22	3-31-67
1-B2- 23	4-24-67
1-B2- 24	3-31-67
1-B2- 25	3-31-67
1-B2- 26	3-31-67
1-B2- 27	6/18/68
1-B2- 28	6/18/68
1-B2- 29	3-31-67
1-B2- 30	3-31-67
1-B2- 31	6/18/68
1-B2- 32	3-31-67
1-B2- 33	3-31-67
1-B2- 34	3-31-67
1-B2- 35	3-31-67
1-B2- 36	6/18/68
1-B2- 37	2/15/68
1-B2- 38	4/24/67
1-B2- 39	3-31-67
1-B2- 40	3-31-67
1-B2- 41	3-31-67
1-B2- 43	3-31-67
1-B2- 42	3-31-67
1-B2- 44	3-31-67
1-B2- 45	3-31-67
1-B2- 46	3-31-67
1-B2- 47	1/26/68
1-B2- 48	7/17/68
1-B2- 49	1/26/68
1-B2- 50	1/26/68
1-B2- 51	3-31-67
1-B2- 52	3-31-67
1-B2- 53	3-31-67
1-B2- 55	2/15/68
1-B2- 56	2/15/68
1-B2- 57	2/15/68
1-B2- 58	3-31-67
1-B2- 59	3-31-67
1-B2- 60	4-24-67
1-B2- 61	3-31-67
1-B2- 62	3-31-67
1-B2- 63	3-31-67
1-B2- 64	3-31-67
1-B2- 65	3-31-67
1-B2- 66	3-31-67
1-B2- 67	3-31-67
1-B2- 68	3-31-67
1-B2- 69	3-31-67
1-B2- 70	3-31-67
1-B2- 71	4-24-67
1-B2- 72	4-24-67
1-B2- 73	4-24-67
1-B2- 74	3-31-67
1-B2- 75	3-31-67
1-B2- 76	3-31-67
1-B2- 77	4-24-67
1-B2- 78	3-31-67
1-B2- 79	3-31-67
1-B2- 80	4-24-67
1-B2- 81	3-31-67
1-B2- 82	3-31-67
1-B2- 83	3-31-67
1-B2- 84	4-24-67
1-B2- 85	4-24-67
1-B2- 86	4-24-67
1-B2- 87	4-24-67
1-B2- 88	4-24-67
1-B2- 89	4-24-67
1-B2- 90	4-24-67
1-B2- 91	4-24-67
1-B2- 92	4-24-67
1-B2- 93	4-24-67
1-B2- 94	4-24-67
1-B2- 95	4-24-67
1-B2- 96	3-31-67
1-B2- 97	4-24-67
1-B2- 98	4-24-67
1-B2- 99	2/15/68
1-B2- 100	2/15/68
1-B2- 101	2/15/68
1-B2- 102	2/15/68
SB- 125	2/15/68
SB- 126	2/15/68
SB- 127	2/15/68
SB- 128	2/15/68
1-AB3- 0	5/ 1/69
1-AB3- 1	7/17/68
1-AB3- 2	7/17/68
1-AB3- 3	2/19/68
1-AB3- 4	5/ 7/68
1-AB3- 4.1	2/19/68
1-AB3- 5	9/ 1/67
1-AB3- 6	1/10/68
1-AB3- 7	2/19/68
1-AB3- 8	5/ 7/68
1-AB3- 9	2/19/68
1-AB3- 9.1	5/ 7/68
1-AB3-10	9/ 1/67
1-AB3-11	9/ 1/67
1-AB3-12	1/10/68
1-AB3-13	2/19/68
1-AB3-14	2/19/68
1-AB3-15	9/ 1/67
1-AB3-16	9/ 1/67
1-AB3-17	9/ 1/67
1-AB3-18	7/17/68
1-AB3-18.1	7/17/68
1-AB3-18.2	2/19/68
1-AB3-19	9/15/67
1-AB3- 20	9/15/67
1-AB3- 21	9/15/67
1-AB3- 22	9/15/67
1-AB3- 22.1	9/15/67
1-AB3- 23	9/15/67
1-AB3- 24	9/15/67
1-AB3- 25	9/15/67
1-AB3- 26	9/15/67
1-AB3- 27	9/15/67
1-AB3- 27.1	9/15/67
1-AB3- 28	9/15/67
1-AB3- 28.1	9/15/67
1-AB3- 28.2	9/15/67
1-AB3- 29	9/15/67
1-AB3- 30	9/18/67
1-AB3- 30.1	9/15/67
1-AB3- 31	9/15/67
1-AB3- 32.1	9/15/67
1-AB3- 32	9/15/67
1-AB3- 33	9/15/67
1-AB3- 33.1	9/15/67
1-AB3- 34	9/18/67
1-AB3- 35	9/15/67
1-AB3-36	2/19/68
1-AB3-37	5/ 7/68
1-AB3-38	2/19/68
1-AB3-39	5/ 7/68
1-AB3-40	2/19/68
1-AB3-41	2/19/68
1-AB3-42	5/ 7/68
1-AB3-43	2/19/68
1-AB3-44	2/19/68
1-AB3-45	2/19/68
1-AB3-49	9/ 1/67
1-AB3-50	2/19/68
1-AB3- 51	1/10/68
1-AB3- 52	2/19/68
1-AB3- 53	1/10/68
1-AB3- 54	1/10/68
1-AB3- 55	7/17/68
1-AB3- 56	1/10/68

LICENSED PROFESSIONAL ENGINEER — LESLIE E. ROBERTSON — No. 34960 — STATE OF NEW YORK

1-AB3-X

SKILLING, HELLE, CHRISTIANSEN, ROBERTSON — Structural & Civil Engineers

PROJECT	TITLE	DATE
THE WORLD TRADE CENTER	DRAWING BOOK 1 - EXTERIOR WALL TO EL. 363	10/ 6/72

REVISIONS

PRINTED 5/18/73

1-AB3- 57 1/10/68
1-AB3- 58 1/10/68
1-AB3- 58.1 1/10/68
1-AB3- 58.2 1/10/68
1-AB3- 60 2/19/68
1-AB3- 8.1 2/19/68
1-AB3- 60.1 2/19/68
1-AB3- 60.2 2/19/68
1-AB3- 60.3 2/19/68
1-AB3- 60.4 2/19/68
1-AB3- 60.5 2/19/68
1-AB3- 60.6 2/19/68
1-AB3- 60.7 2/19/68
1-AB3- 60.8 2/19/68
1-AB3- 60.912/18/68
1-AB3- 61 2/19/68
1-AB3- 62 1/10/68
1-AB3- 63 2/19/68
1-AB3- 64 1/10/68
1-AB3- 65 2/19/68
1-AB3- 65.1 2/19/68
1-AB3-65.2 2/19/68
1-AB3-65.3 2/19/68
1-AB3- 66 2/19/68

LICENSED PROFESSIONAL ENGINEER LESLIE E. ROBERTSON NO. 34060 STATE OF NEW YORK

SKILLING, HELLE, CHRISTIANSEN, ROBERTSON — Structural & Civil Engineers

PROJECT	TITLE	DATE
THE WORLD TRADE CENTER	EXTERIOR WALL TO EL.363 - INDEX	4/ 1/69

REVISIONS

Printed 5-1-69

1-A2- 1 COLUMN SCHEDULE - NOTES
1-A2- 2 COLUMN SCHEDULE
1-A2- 3 COLUMN SCHEDULE
1-A2- 4 COLUMN SCHEDULE
1-A2- 5 COLUMN SCHEDULE
1-A2- 6 COLUMN SCHEDULE - NOTES
1-A2- 7 COLUMN SCHEDULE
1-A2- 8 COLUMN SCHEDULE
1-A2- 9 SPANDREL, STRUT, BRACING SCHEDULE
1-A2-10 SPANDREL AND STRUT SCHEDULE
1-A2-11 BRACING SCHEDULE
1-A2-12 SPANDREL AND STRUT SCHEDULE
1-A2-13 BRACING SCHEDULE
1-A2-14 SPANDREL AND STRUT SCHEDULE
1-A2-15 BRACING SCHEDULE
1-A2-16 SPANDREL AND STRUT SCHEDULE
1-A2-17 BRACING SCHEDULE
1-A2-18 COLUMN TYPE 1000,8000,2000
1-A2-19 COLUMN TYPE 1000
1-A2-20 COLUMN TYPE 8000
1-A2-21 COLUMN TYPE 8000
1-A2-22 COLUMN TYPE 2000
1-A2-23 COLUMN TYPE 5000,6000,7000
1-A2-24 COLUMN TYPE 5000
1-A2-25 COLUMN TYPE 5000
1-A2-26 COLUMN TYPE 5000
1-A2-27 COLUMN TYPE 6000
1-A2-28 COLUMN TYPE 6000
1-A2-29 COLUMN TYPE 6000
1-A2-30 COLUMN TYPE 7000
1-A2-31 COLUMN TYPE 7000
1-A2-32 COLUMN TYPE 7000
1-A2-33 COLUMN TYPE 7000
1-A2-34 COLUMN SPLICE DETAIL 101
1-A2-35 COLUMN SPLICE DETAILS 200
1-A2-36 COLUMN SPLICE DETAIL 501
1-A2-37 COLUMN SPLICE DETAILS 700
1-A2-38 SPANDREL SPLICE DETAIL A
1-A2-39 SPANDREL SPLICE DETAIL A
1-A2-40 SPANDREL SPLICE DETAIL B
1-A2-41 SECTION A-A
1-A2-42 SECTION B-B
1-A2-43 SECTION C-C
1-A2-44 GENERAL NOTES
1-A2-45 SPANDREL TYPE C
1-A2-46 SPANDREL TYPE C
1-A2-47 SPANDREL TYPE D
1-A2-48 SPANDREL TYPE D
1-A2-49 STRUT TYPE E
1-A2-50 STRUT TYPE E
1-A2-51 STRUT TYPE F
1-A2-52 STRUT TYPE F
1-A2-53 STRUT TYPE F
1-A2-54 STRUT TYPE H
1-A2-55 STRUT TYPE H
1-A2-56 BRACING TYPE G
1-A2-57 BRACING TYPE G
1-A2-58 SPANDREL EL.350 -BENDING DETAILS
1-A2-59 SPANDREL EL.350 -DETAIL PLATE 5
1-A2-60 DETAILS 1, 2, 3
1-A2-61 DETAILS 4, 5, 6
1-A2-62 DETAILS 7, 8, 9, 10
1-A2-63 DETAILS 11, 12, 13, 14
1-A2-64 DETAILS 15, 16, 17, 18
1-A2-65 DETAILS 19, 20
1-A2-66 DETAILS 21, 22, 23
1-A2-67 SPANDREL TYPE C

LICENSED PROFESSIONAL ENGINEER
LESLIE E. ROBERTSON
No. 34360
UNIVERSITY OF THE STATE OF NEW YORK

100

SKILLING-HELLE-CHRISTIANSEN-ROBERTSON — **Civil & Structural Engineers**

PROJECT	TITLE	DATE
THE WORLD TRADE CENTER	EXTERIOR WALL TO EL.363 - COLUMN SCHEDULE	9-1-67

REVISIONS

COLUMN NUMBER	UPPER SPLICE ELEV.	LOWER SPLICE ELEV.	COLUMN					SEAT DETAILS								
			TYPE	FY1	FY2	UCS	LCS	EL.	TWR	PLZ	EL.	TWR	PLZ	EL.	TWR	PLZ	FL.	TWR	PLZ
(1)	(2)	(3)	(4)	(5)	(6)	(7)	(8)	(9)	(10)	(11)	(9)	(10)	(11)	(9)	(10)	(11)	(9)	(10)	(11)

NOTES -
(1) COLUMN NUMBER A INDICATES TOWER A B INDICATES TOWER B
(2) ELEVATION IN FEET OF UPPER COLUMN SPLICE
(3) ELEVATION IN FEET OF LOWER COLUMN SPLICE
(4) COLUMN TYPE - FOR DIMENSIONS , PLATE THICKNESS , AND WELDS SEE PAGES 1-A2-18 THRU 27
(5) REQUIRED YIELD STRENGTH FOR PLATE NO. 1 (KSI)
(6) REQUIRED YIELD STRENGTH FOR PLATE NO. 2 (KSI)
(7) DETAIL NUMBER FOR UPPER COLUMN SPLICE - SEE PAGES 1-A2-34 THRU 37
(8) DETAIL NUMBER FOR LOWER COLUMN SPLICE - SEE PAGES 1-A2-34 THRU 37
(9) REFERENCE ELEVATION FOR SEAT DETAILS INDICATED IN (10) AND (11)
(10) DETAIL NUMBER FOR SEAT DETAIL ON TOWER FACE OF COLUMN - SEE PAGES 1-AB3- 1 THRU 18
(11) DETAIL NUMBER FOR SEAT DETAIL ON PLAZA BUILDING FACE OF COLUMN - SEE PAGES 1-AB3-50 THRU 66

LICENSED PROFESSIONAL ENGINEER
LESLIE E. ROBERTSON
No. 34350
UNIVERSITY OF THE STATE OF N.Y.

SKILLING-HELLE-CHRISTIANSEN-ROBERTSON — Civil & Structural Engineers

PROJECT: THE WORLD TRADE CENTER | TITLE: EXTERIOR WALL TO EL.363 - COLUMN SCHEDULE | DATE: 01-10-68

REVISIONS
2-15-68

COLUMN NUMBER	UPPER SPLICE ELEV.	LOWER SPLICE ELEV.	COLUMN TYPE	FY1	FY2	UCS	LCS	SEAT DETAILS EL.	TWR	PLZ	EL.	TWR	PLZ	EL.	TWR	PLZ	EL.	TWR	PLZ
101A	287.00	240.67	1002	45	45	101		253	753A	P01F	264	738A	-	274	753D	P05C	284	758A	P07A
101A	318.00	287.00	8003	45	45	501	101	294	759A	P07B	310	765A	P10A	-	-	-	-	-	-
103A	287.00	240.67	2009	42	42	204		253	756C	P01B	264	733A	-	274	750B	P03D	284	756B	-
103A	318.00	287.00	2009	42	42	702	204	294	760B	P08A	310	767A	P20A	-	-	-	-	-	-
106A	287.00	240.67	2013	36	36	206		253	-	P01A	264	734B	-	274	751B	P03C	284	756B	-
106A	318.00	287.00	2013	36	36	703	206	294	760B	P08A	310	767A	-	311	-	P40A	-	-	-
109A	287.00	240.67	2016	36	36	208		253	-	P01B	264	733A	-	274	752B	P03D	284	756B	-
109A	318.00	287.00	2016	36	36	704	208	294	760B	P08A	310	767A	-	313	-	P40B	-	-	-
112A	287.00	240.67	2017	36	36	208		253	-	P01A	264	733A	-	274	751B	P03C	284	757B	-
112A	318.00	287.00	2017	36	36	704	208	294	761B	P08A	310	766A	-	317	-	P40C	-	-	-
115A	287.00	240.67	2017	36	36	208		253	-	P01B	264	733A	-	274	752B	P03D	284	756B	-
115A	318.00	287.00	2017	36	36	704	208	294	760B	P08A	310	767A	-	-	-	-	-	-	-
118A	287.00	240.67	2017	36	36	208		253	-	P01A	264	735A	-	274	751B	P03C	284	756B	-
118A	318.00	287.00	2017	36	36	704	208	294	760B	P08A	310	767A	P11A	-	-	-	-	-	-
121A	287.00	240.67	2017	36	36	208		253	-	P01B	264	733A	-	274	752B	P03D	284	756B	-
121A	318.00	287.00	2017	36	36	704	208	294	760B	P08A	310	767A	-	-	-	-	-	-	-
124A	287.00	240.67	2017	36	36	208		253	-	P01A	264	733A	-	274	751B	P03C	284	757B	-
124A	318.00	287.00	2017	36	36	704	208	294	761B	P08A	310	766A	-	-	-	-	-	-	-
127A	287.00	240.67	2018	36	36	208		253	-	P01B	264	733A	-	274	752B	P03D	284	756B	-
127A	318.00	287.00	2018	36	36	704	208	294	760B	P08A	310	767A	P11A	-	-	-	-	-	-
130A	287.00	240.67	2019	36	36	208		253	-	P01A	264	735A	-	274	751B	P03C	284	756B	-
130A	318.00	287.00	2019	36	36	704	208	294	760B	P08A	310	767A	-	-	-	-	-	-	-
133A	287.00	240.67	2019	36	36	208		253	-	P01B	264	733A	-	274	752B	P03D	284	756B	-
133A	318.00	287.00	2019	36	36	704	208	294	760B	P08A	310	767A	-	-	-	-	-	-	-
136A	287.00	240.67	2019	36	36	208		253	-	P01A	264	733A	-	274	751B	P03C	284	757B	-
136A	318.00	287.00	2019	36	36	704	208	294	761B	P08A	310	766A	P35A	-	-	-	-	-	-
139A	287.00	240.67	2019	36	36	208		253	-	P01B	264	733A	-	274	752B	P03D	284	756B	-
139A	318.00	287.00	2019	36	36	704	208	294	760B	P08A	310	767A	-	-	-	-	-	-	-
142A	287.00	240.67	2018	36	36	208		253	-	P01A	264	735A	-	274	751B	P03C	284	756B	-
142A	318.00	287.00	2018	42	42	704	208	294	760B	P08A	310	767A	P11C	-	-	-	-	-	-
145A	287.00	240.67	2017	36	36	208		253	-	P01B	264	733A	-	274	752B	P03D	284	756B	-
145A	318.00	287.00	2017	36	36	704	208	294	760B	P08A	310	767A	P11A	-	-	-	-	-	-
148A	287.00	240.67	2017	36	36	208		253	-	P01C	264	733A	-	274	751B	P03C	284	756B	-
148A	318.00	287.00	2017	36	36	704	208	294	761B	P08A	310	766A	-	-	-	-	-	-	-
151A	287.00	240.67	2016	36	36	208		253	755A	P01D	264	733A	-	274	752B	P03D	284	757B	-
151A	318.00	287.00	2016	42	42	704	208	294	760B	P08A	310	767A	P11B	-	-	-	-	-	-
154A	287.00	240.67	2013	36	36	206		253	753B	P01E	264	734A	-	274	751B	P03A	284	756B	-
154A	318.00	287.00	2013	42	42	703	206	294	760B	P08A	310	767A	P12A	-	-	-	-	-	-
157A	287.00	240.67	2009	42	42	204		253	755B	P01D	264	733A	-	274	750B	P03G	284	756B	-
157A	318.00	287.00	2009	42	42	702	204	294	760B	-	310	767A	P12B	-	-	-	-	-	-
159A	287.00	240.67	1002	45	45	101		253	-	P01E	264	738A	-	274	753D	P03F	284	758A	-
159A	318.00	287.00	8003	45	45	501	101	294	759A	-	310	765A	P13A	-	-	-	-	-	-

LICENSED PROFESSIONAL ENGINEER LESLIE E. ROBERTSON No. 34560 UNIVERSITY OF THE STATE OF NEW YORK

SKILLING-HELLE-CHRISTIANSEN-ROBERTSON — Civil & Structural Engineers

PROJECT: THE WORLD TRADE CENTER | TITLE: EXTERIOR WALL TO EL.363 - COLUMN SCHEDULE | DATE: 1-10-68

REVISIONS: 1-26-68

COLUMN NUMBER	UPPER SPLICE ELEV.	LOWER SPLICE ELEV.	COLUMN TYPE	FY1	FY2	UCS	LCS	SEAT DETAILS EL.	TWR	PLZ	EL.	TWR	PLZ	EL.	TWR	PLZ	EL.	TWR	PLZ
201A	287.00	240.67	1001	45	45	101		253	-	P02C	264	738A	-	274	753D	P03F	284	758A	-
201A	318.00	287.00	8023	45	45	501	101	294	771A	-	310	765A	-	-	-	-	-	-	-
203A	287.00	240.67	2004	42	42	201		253	-	P02A	264	736A	-	274	750A	P03G	284	756A	-
203A	318.00	287.00	2004	42	42	701	201	294	760A	-	310	770A	P14D	-	-	-	-	-	-
206A	287.00	240.67	2005	36	36	201		253	-	P02A	264	737A	-	274	751A	P03A	284	756A	-
206A	318.00	287.00	2005	42	42	701	201	294	760A	-	310	770A	P14D	-	-	-	-	-	-
209A	287.00	240.67	2005	36	36	201		253	-	P02B	264	736A	-	274	752A	P03B	284	756A	-
209A	318.00	287.00	2005	42	42	701	201	294	760A	-	310	770A	P14A	-	-	-	-	-	-
212A	287.00	240.67	2006	36	36	202		253	-	P02A	264	736A	-	274	751A	P03A	284	757A	-
212A	318.00	287.00	2006	42	42	701	202	294	761A	-	310	769A	P14B	-	-	-	-	-	-
215A	287.00	240.67	2007	36	36	203		253	-	P02B	264	736A	-	274	752A	P03B	284	756A	-
215A	318.00	287.00	2007	42	42	701	203	294	760C	-	310	770A	P14A	-	-	-	-	-	-
218A	287.00	240.67	2011	36	36	205		253	-	P02A	264	735A	-	274	751A	P03A	284	756A	-
218A	318.00	287.00	2011	42	42	702	205	294	760A	-	310	770A	P14A	-	-	-	-	-	-
221A	287.00	240.67	2010	36	36	205		253	-	P02B	264	733B	-	274	752A	P03B	284	756A	-
221A	318.00	287.00	2010	42	42	702	205	294	760B	-	310	767B	P14A	-	-	-	-	-	-
224A	287.00	240.67	2008	36	36	203		253	-	P02A	264	733B	-	274	751B	P03A	284	757B	-
224A	318.00	287.00	2008	42	42	701	203	294	761B	-	310	766B	P14B	-	-	-	-	-	-
227A	287.00	240.67	2008	36	36	203		253	-	P02B	264	733B	-	274	752B	P03B	284	756B	-
227A	318.00	287.00	2008	42	42	701	203	294	760B	-	310	767B	P14A	-	-	-	-	-	-
230A	287.00	240.67	2008	36	36	203		253	-	P02A	264	735B	-	274	751B	P03A	284	756B	-
230A	318.00	287.00	2008	45	45	701	203	294	760B	-	310	770A	P14A	-	-	-	-	-	-
233A	287.00	240.67	2008	36	36	203		253	-	P02B	264	733B	-	274	752B	P03B	284	756B	-
233A	318.00	287.00	2008	45	45	701	203	294	760B	-	310	767B	P14A	-	-	-	-	-	-
236A	287.00	240.67	2008	36	36	203		253	-	P02A	264	733B	-	274	751B	P03A	284	757B	-
236A	318.00	287.00	2008	45	45	701	203	294	761B	-	310	766B	P14B	-	-	-	-	-	-
239A	287.00	240.67	2010	36	36	205		253	-	P02B	264	733B	-	274	752B	P03B	284	756B	-
239A	318.00	287.00	2010	45	45	702	205	294	760B	-	310	767B	P14A	-	-	-	-	-	-
242A	287.00	240.67	2011	36	36	205		253	-	P02A	264	735A	-	274	751B	P03A	284	756B	-
242A	318.00	287.00	2011	50	50	702	205	294	760B	-	310	770A	P14A	-	-	-	-	-	-
245A	287.00	240.67	2007	36	36	203		253	-	P02B	264	733A	-	274	752B	P03B	284	756B	-
245A	318.00	287.00	2007	45	45	701	203	294	760B	-	310	770A	P14A	-	-	-	-	-	-
248A	287.00	240.67	2006	36	36	202		253	-	P02A	264	733A	-	274	751B	P03A	284	757B	-
248A	318.00	287.00	2006	45	45	701	202	294	761A	-	310	769A	P14B	-	-	-	-	-	-
251A	287.00	240.67	2005	36	36	201		253	-	P02B	264	733A	-	274	752B	P03B	284	756B	-
251A	318.00	287.00	2005	50	50	701	201	294	760B	-	310	770A	P14A	-	-	-	-	-	-
254A	287.00	240.67	2005	42	42	201		253	-	P02A	264	734A	-	274	751B	P03A	284	756B	-
254A	318.00	287.00	2005	50	50	701	201	294	760A	-	310	770A	P14A	-	-	-	-	-	-
257A	287.00	240.67	2004	45	45	201		253	-	P02B	264	733A	-	274	750A	P03G	284	756B	-
257A	318.00	287.00	2004	50	50	701	201	294	760A	-	310	770A	P14A	-	-	-	-	-	-
259A	287.00	240.67	1001	55	55	101		253	-	P02F	264	738A	-	274	753D	P03F	284	758A	-
259A	318.00	287.00	8023	50	50	501	101	294	759A	-	310	765A	P14C	-	-	-	-	-	-

LICENSED PROFESSIONAL ENGINEER — LESLIE E. ROBERTSON — No. 34360 — UNIVERSITY OF THE STATE OF NEW YORK

SKILLING-HELLE-CHRISTIANSEN-ROBERTSON — **Civil & Structural Engineers**

PROJECT: THE WORLD TRADE CENTER

TITLE: EXTERIOR WALL TO EL.363 - COLUMN SCHEDULE

DATE: 1-10-68

REVISIONS

COLUMN NUMBER	UPPER SPLICE ELEV.	LOWER SPLICE ELEV.	COLUMN TYPE	FY1	FY2	UCS	LCS	SEAT DETAILS EL.	TWR	PLZ	EL.	TWR	PLZ	EL.	TWR	PLZ	EL.	TWR	PLZ
301A	287.00	240.67	1002	50	50	101		253	-	P02E	264	738A	-	274	753D	P03F	284	758A	P06D
301A	318.00	287.00	8003	50	50	501	101	294	759A	P09A	310	765A	P30A	-	-	-	-	-	-
303A	287.00	240.67	2009	42	42	204		253	-	P02B	264	736A	-	274	753D	P03G	284	758A	P06E
303A	318.00	287.00	2009	45	45	702	204	294	760B	-	310	770A	-	-	-	-	-	-	-
306A	287.00	240.67	2013	42	42	206		253	-	P02A	264	734A	-	274	751B	P03A	284	756B	P06F
306A	318.00	287.00	2013	45	45	703	206	294	760B	-	310	767A	-	-	-	-	-	-	-
309A	287.00	240.67	2016	42	42	208		253	-	P02B	264	733A	-	274	752B	P03B	284	756B	-
309A	318.00	287.00	2016	42	42	704	208	294	760B	-	310	767A	-	-	-	-	-	-	-
312A	287.00	240.67	2017	36	36	208		253	-	P02A	264	733A	-	274	751B	P03A	284	757B	-
312A	318.00	287.00	2017	42	42	704	208	294	761B	P09B	310	766A	P31A	-	-	-	-	-	-
315A	287.00	240.67	2017	36	36	208		253	-	P02B	264	733A	-	274	752B	P03B	284	756B	-
315A	318.00	287.00	2017	42	42	704	208	294	760B	P08A	310	767A	-	-	-	-	-	-	-
318A	287.00	240.67	2017	36	36	208		253	-	P02A	264	735A	-	274	751B	P03A	284	756B	-
318A	318.00	287.00	2017	42	42	704	208	294	760B	P08A	310	767A	-	-	-	-	-	-	-
321A	287.00	240.67	2017	36	36	208		253	-	P02B	264	733A	-	274	752B	P03B	284	756B	-
321A	318.00	287.00	2017	36	36	704	208	294	760B	P08A	310	767A	P31C	-	-	-	-	-	-
324A	287.00	240.67	2017	36	36	208		253	-	P02A	264	733A	-	274	751B	P03A	284	757B	-
324A	318.00	287.00	2017	36	36	704	208	294	761B	P08A	310	766A	-	-	-	-	-	-	-
327A	287.00	240.67	2018	36	36	208		253	-	P02B	264	733A	-	274	752B	P03B	284	756B	-
327A	318.00	287.00	2018	36	36	704	208	294	760B	P08A	310	767A	-	-	-	-	-	-	-
330A	287.00	240.67	2019	36	36	208		253	-	P02A	264	735A	-	274	751B	P03A	284	756B	-
330A	318.00	287.00	2019	36	36	704	208	294	760B	P08A	310	767A	P31C	-	-	-	-	-	-
333A	287.00	240.67	2019	36	36	208		253	-	P02B	264	733A	-	274	752B	P03B	284	756B	-
333A	318.00	287.00	2019	36	36	704	208	294	760B	P08A	310	767A	-	-	-	-	-	-	-
336A	287.00	240.67	2019	36	36	208		253	-	P02A	264	733A	-	274	751B	P03A	284	757B	-
336A	318.00	287.00	2019	36	36	704	208	294	761B	P08A	310	766A	-	-	-	-	-	-	-
339A	287.00	240.67	2019	36	36	208		253	-	P02B	264	733A	-	274	752B	P03B	284	756B	-
339A	318.00	287.00	2019	36	36	704	208	294	760B	P08A	310	767A	P31D	-	-	-	-	-	-
342A	287.00	240.67	2018	36	36	208		253	-	P02A	264	735A	-	274	751B	P03A	284	756B	-
342A	318.00	287.00	2018	36	36	704	208	294	760B	P08A	310	767A	-	-	-	-	-	-	-
345A	287.00	240.67	2017	36	36	208		253	-	P02B	264	733A	-	274	752B	P03B	284	756B	-
345A	318.00	287.00	2017	42	42	704	208	294	760B	P08A	310	767A	-	-	-	-	-	-	-
348A	287.00	240.67	2017	36	36	208		253	-	P02A	264	733A	-	274	751B	P03A	284	757B	-
348A	318.00	287.00	2017	42	42	704	208	294	761B	P08A	310	766A	-	317	-	P40C	-	-	-
351A	287.00	240.67	2016	42	42	208		253	-	P02B	264	733A	-	274	752B	P03B	284	756B	-
351A	318.00	287.00	2016	42	42	704	208	294	760B	P08A	310	767A	P31E	313	-	P40B	-	-	-
354A	287.00	240.67	2013	36	36	206		253	-	P02A	264	734A	-	274	751B	P03A	284	756B	-
354A	318.00	287.00	2013	42	42	703	206	294	760B	P08A	310	767A	-	311	-	P40A	-	-	-
357A	287.00	240.67	2009	42	42	204		253	-	P02B	264	733A	-	274	750B	P03D	284	756B	-
357A	318.00	287.00	2009	42	42	702	204	294	760B	P08A	310	767A	P16A	-	-	-	-	-	-
359A	287.00	240.67	1002	45	45	101		253	-	P02D	264	738A	-	274	753D	P03E	264	758A	-
359A	318.00	287.00	8003	45	45	501	101	294	759A	P08B	310	765A	P15A	-	-	-	-	-	-

LICENSED PROFESSIONAL ENGINEER LESLIE E. ROBERTSON No. 34360 UNIVERSITY OF THE STATE OF NEW YORK

SKILLING-HELLE-CHRISTIANSEN-ROBERTSON — **Civil & Structural Engineers**

PROJECT: THE WORLD TRADE CENTER | TITLE: EXTERIOR WALL TO EL.363 - COLUMN SCHEDULE | DATE: 1-12-68

REVISIONS: 1-26-68

COLUMN NUMBER	UPPER SPLICE ELEV.	LOWER SPLICE ELEV.	COLUMN TYPE	COLUMN FY1	COLUMN FY2	COLUMN UCS	COLUMN LCS	SEAT DETAILS EL.	TWR	PLZ	EL.	TWR	PLZ	EL.	TWR	PLZ	EL.	TWR	PLZ
401A	287.00	240.67	1001	45	45	101		253	-	P01H	264	738A	-	274	753D	P03F	284	758A	-
401A	318.00	287.00	8023	50	50	501	101	294	759A	P08B	310	765A	-	-	-	-	-	-	-
403A	287.00	240.67	2004	42	42	201		253	-	P01B	264	736A	-	274	750A	P03D	284	756A	-
403A	318.00	287.00	2004	50	50	701	201	294	760A	P08A	310	770A	P21A	-	-	-	-	-	-
406A	287.00	240.67	2005	42	42	201		253	-	P01A	264	737A	-	274	751A	P03C	284	756A	-
406A	318.00	287.00	2005	50	50	701	201	294	760A	P08A	310	770A	-	-	-	-	-	-	-
409A	287.00	240.67	2005	36	36	201		253	-	P01B	264	736A	-	274	752A	P03D	284	756A	-
409A	318.00	287.00	2005	45	45	701	201	294	760A	P08A	310	770A	-	-	-	-	-	-	-
412A	287.00	240.67	2006	36	36	202		253	-	P01A	264	736A	-	274	751A	P03C	284	757A	-
412A	318.00	287.00	2006	45	45	701	202	294	761A	P08A	310	769A	P22A	-	-	-	-	-	-
415A	287.00	240.67	2007	36	36	203		253	-	P01B	264	736A	-	274	752A	P03D	284	756A	-
415A	318.00	287.00	2007	45	45	701	203	294	760A	P08A	310	770A	-	-	-	-	-	-	-
418A	287.00	240.67	2011	36	36	205		253	753C	P01A	264	735A	-	274	751A	P03C	284	756A	-
418A	318.00	287.00	2011	45	45	702	205	294	760A	P08A	310	770A	-	-	-	-	-	-	-
421A	287.00	240.67	2010	36	36	205		253	753C	P01B	264	736A	-	274	752B	P03D	284	756B	-
421A	318.00	287.00	2010	42	42	702	205	294	760B	P08A	310	767B	P22B	-	-	-	-	-	-
424A	287.00	240.67	2008	36	36	203		253	753C	P01A	264	733B	-	274	751B	P03C	284	757B	-
424A	318.00	287.00	2008	42	42	701	203	294	761B	P08A	310	766B	--	-	-	-	-	-	-
427A	287.00	240.67	2008	36	36	203		253	753C	P01B	264	733B	-	274	752B	P03D	284	756B	-
427A	318.00	287.00	2008	42	42	701	203	294	760B	P08A	310	767A	-	-	-	-	-	-	-
430A	287.00	240.67	2008	36	36	203		253	753C	P01A	264	735B	-	274	751B	P03C	284	756B	-
430A	318.00	287.00	2008	45	45	701	203	294	760B	P08A	310	772A	P23A	-	-	-	-	-	-
433A	287.00	240.67	2008	36	36	203		253	753C	P01B	264	733B	-	274	752B	P03D	284	756B	-
433A	318.00	287.00	2008	42	42	701	203	294	760B	P08A	310	767A	-	-	-	-	-	-	-
436A	287.00	240.67	2008	36	36	203		253	753C	P01A	264	733B	-	274	751B	P03C	284	757B	-
436A	318.00	287.00	2008	42	42	701	203	294	761B	P08A	310	772A	P24A	-	-	-	-	-	-
439A	207.00	240.67	2010	36	36	205		253	753C	P01B	264	736A	-	274	752B	P03D	284	756B	-
439A	318.00	287.00	2010	42	42	702	205	294	760B	P08A	310	766A	-	-	-	-	-	-	-
442A	287.00	240.67	2011	36	36	205		253	753C	P01A	264	735A	-	274	751A	P03C	284	756A	-
442A	318.00	287.00	2011	42	42	702	205	294	760A	P08A	310	770A	-	-	-	-	-	-	-
445A	287.00	240.67	2007	36	36	203		253	753A	P01B	264	736A	-	274	752A	P03D	284	756A	-
445A	318.00	287.00	2007	42	42	701	203	294	760A	P08A	310	770A	P25A	-	-	-	-	-	-
448A	287.00	240.67	2006	36	36	202		253	753A	P01A	264	736A	-	274	751A	P03C	284	757A	-
448A	318.00	287.00	2006	42	42	701	202	294	761A	P08A	310	769A	-	-	-	-	-	-	-
451A	287.00	240.67	2005	36	36	201		253	763A	P01B	264	736A	-	274	752A	P03D	284	756A	-
451A	318.00	287.00	2005	42	42	701	201	294	760A	P08A	310	770A	-	-	-	-	-	-	-
454A	287.00	240.67	2005	36	36	201		253	753A	P01A	264	737A	-	274	751A	P05D	284	756A	P06A
454A	318.00	287.00	2005	45	45	701	201	294	760A	P04E	310	770A	P26A	-	-	-	-	-	-
457A	287.00	240.67	2004	42	42	201		253	753A	P01B	264	736A	-	274	750A	P03D	284	756A	-
457A	318.00	287.00	2004	42	42	701	201	294	760A	P08A	310	770A	-	-	-	-	-	-	-
459A	287.00	240.67	1001	42	42	101		253	753A	P01F	264	738A	-	274	753A	P03F	284	758A	-
459A	318.00	287.00	8023	45	45	501	101	294	759A	P08B	310	765A	P17A	-	-	-	-	-	-

LICENSED PROFESSIONAL ENGINEER LESLIE E. ROBERTSON No. 34360 UNIVERSITY OF THE STATE OF NEW YORK

SKILLING-HELLE-CHRISTIANSEN-ROBERTSON — **Civil & Structural Engineers**

PROJECT	TITLE	DATE
THE WORLD TRADE CENTER	EXTERIOR WALL TO EL.363 - COLUMN SCHEDULE	9-15-67

REVISIONS

COLUMN NUMBER	UPPER SPLICE ELEV.	LOWER SPLICE ELEV.	COLUMN					SPANDREL EL. 350						SPANDREL EL. 332						SEAT
			TYPE	FY1	FY2	UCS	LCS	FY5	FY6	FY7	SCL	SCR	WELD 6	FY8	FY9	FY10	SCL	SCR	WELD 5	SDT	PLZ
(1)	(2)	(3)	(4)	(5)	(6)	(7)	(8)	(9)	(10)	(11)	(12)	(13)	(14)	(15)	(16)	(17)	(18)	(19)	(20)	(21)	(22)

NOTES -
(1) COLUMN NUMBER A INDICATES TOWER A B INDICATES TOWER B
(2) ELEVATION IN FEET OF UPPER COLUMN SPLICE
(3) ELEVATION IN FEET OF LOWER COLUMN SPLICE
(4) COLUMN TYPE - FOR DIMENSIONS , PLATE THICKNESS , AND WELDS SEE PAGES 1-A2-23 THRU 33
(5) REQUIRED YIELD STRENGTH FOR PLATE NO. 1 (KSI)
(6) REQUIRED YIELD STRENGTH FOR PLATE NO. 2 (KSI)
(7) DETAIL NUMBER FOR UPPER COLUMN SPLICE - SEE PAGES 1-A2-34 THRU 37
(8) DETAIL NUMBER FOR LOWER COLUMN SPLICE - SEE PAGES 1-A2-34 THRU 37
(9) REQUIRED YIELD STRENGTH FOR PLATE NO. 5 (KSI)
(10) REQUIRED YIELD STRENGTH FOR PLATE NO. 6 (KSI)
(11) REQUIRED YIELD STRENGTH FOR PLATE NO. 7 (KSI)
(12) DETAIL NUMBER FOR LEFT SPANDREL CONNECTION - NOTE (22) - SEE PAGES 1-A2-38 AND 39
(13) DETAIL NUMBER FOR RIGHT SPANDREL CONNECTION - NOTE (22) - SEE PAGES 1-A2-38 AND 39
(14) WELD 6 (INCHES) SEE 1-A2-25,28,31,32 FOR LOCATION AND TYPE
(15) REQUIRED YIELD STRENGTH FOR PLATE NO. 8 (KSI)
(16) REQUIRED YIELD STRENGTH FOR PLATE NO. 9 (KSI)
(17) REQUIRED YIELD STRENGTH FOR PLATE NO.10 (KSI)
(18) DETAIL NUMBER FOR LEFT SPANDREL CONNECTION - NOTE (22) - SEE PAGE 1-A2-40
(19) DETAIL NUMBER FOR RIGHT SPANDREL CONNECTION - NOTE (22) - SEE PAGE 1-A2-40
(20) WELD 5 (INCHES) SEE 1-A2-26,29,33 FOR LOCATION AND TYPE
(21) DETAIL NUMBER FOR SEAT DETAIL ON TOWER FACE OF COLUMN - SEE PAGES 1-AB3-19 THRU 35
(22) DETAIL NUMBER FOR SEAT DETAIL ON PLAZA BUILDING FACE OF COLUMN - SEE PAGES 1-AB3-65 AND 66
(23) ALL COLUMNS ARE SHOWN FROM INSIDE OF THE TOWER LOOKING OUT

SKILLING-HELLE-CHRISTIANSEN-ROBERTSON — Civil & Structural Engineers

PROJECT: THE WORLD TRADE CENTER | TITLE: EXTERIOR WALL TO EL.363 - COLUMN SCHEDULE | DATE: 01-10-68

REVISIONS
2-15-68

COLUMN NUMBER	UPPER SPLICE ELEV.	LOWER SPLICE ELEV.	COLUMN TYPE	COLUMN FY1	COLUMN FY2	COLUMN UCS	COLUMN LCS	SPANDREL EL. 350 FY5	SPANDREL EL. 350 FY6	SPANDREL EL. 350 FY7	SPANDREL EL. 350 SCL	SPANDREL EL. 350 SCR	SPANDREL EL. 350 WELD 6	SPANDREL EL. 332 FY8	SPANDREL EL. 332 FY9	SPANDREL EL. 332 FY10	SPANDREL EL. 332 SCL	SPANDREL EL. 332 SCR	SPANDREL EL. 332 WELD 5	SPANDREL EL. 332 SDT	SEAT PLZ
101A	363.00	318.00	5003	60	60	501	501	60	36	36	-	A14	3/4	36	36	36	-	B11	3/4	850A	-
103A	363.00	318.00	6009	45	45	702	702	45	36	36	A14	A12	7/8	36	36	36	B11	B12	3/4	844A	-
106A	363.00	318.00	7013	45	45	703	703	45	36	36	A12	A12	7/8	36	36	36	B12	B12	3/4	843A	-
109A	363.00	318.00	7016	42	42	704	704	42	36	36	A12	A12	1-1/16	36	36	36	B12	B12	13/16	842A	X
112A	363.00	318.00	7217	42	42	704	704	42	36	36	A12	A12	1-1/8	36	36	36	B12	B12	F.P.	841B	-
115A	363.00	318.00	7217	42	42	704	704	42	36	36	A12	A11	1-3/16	36	36	36	B12	B11	F.P.	840D	P40D
118A	363.00	318.00	7217	42	42	704	704	42	36	36	A11	A11	1-1/4	36	36	36	B11	B11	F.P.	840C	P40E
121A	363.00	318.00	7217	42	42	704	704	42	36	36	A11	A11	1-5/16	36	36	36	B11	B11	F.P.	840A	P40E
124A	363.00	318.00	7217	42	42	704	704	42	36	36	A11	A11	1-5/16	36	36	36	B11	B11	F.P.	840A	P41B
127A	363.00	318.00	7318	42	42	704	704	42	36	36	A11	A11	1-5/16	36	36	36	B11	B11	F.P.	840A	P40K
130A	363.00	318.00	7419	42	42	704	704	42	36	36	A11	A11	1-5/16	36	36	36	B11	B11	F.P.	839A	P40K
133A	363.00	318.00	7419	42	42	704	704	42	36	36	A11	A11	1-5/16	36	36	36	B11	B11	F.P.	840A	P40K
136A	363.00	318.00	7419	42	42	704	704	42	36	36	A11	A11	1-5/16	36	36	36	B11	B11	F.P.	840A	P40K
139A	363.00	318.00	7419	45	45	704	704	45	36	36	A11	A11	1-5/16	36	36	36	B11	B11	F.P.	840A	P40K
142A	363.00	318.00	7318	45	45	704	704	45	36	36	A11	A11	1-1/4	36	36	36	B11	B11	F.P.	840B	P40K
145A	363.00	318.00	7217	45	45	704	704	45	36	36	A11	A12	1-3/16	36	36	36	B11	B12	F.P.	840D	P40K
148A	363.00	318.00	7217	50	50	704	704	50	36	36	A12	A12	1-1/8	36	36	36	B12	B12	F.P.	841A	P40K
151A	363.00	318.00	7016	50	50	704	704	50	36	36	A12	A12	1-1/16	36	36	36	B12	B12	13/16	842B	P40K
154A	363.00	318.00	7013	50	50	703	703	50	36	36	A12	A12	15/16	36	36	36	B12	B11	3/4	843A	P40K
157A	363.00	318.00	6009	50	50	702	702	50	36	36	A12	A14	7/8	36	36	36	B11	B11	3/4	844A	P40K
159A	363.00	318.00	5003	60	60	501	501	60	36	36	A14	-	7/8	36	36	36	B11	-	3/4	850A	P42D
◆201A	363.00	318.00	5022	60	60	504	504	60	36	36	-	A14	3/4	36	36	36	-	B11	3/4	850A	P42A
203A	363.00	318.00	6004	50	50	701	701	50	36	36	A14	A12	3/4	36	36	36	B11	B12	3/4	848A	P40J
206A	363.00	318.00	7005	50	50	701	701	50	36	36	A12	A13	3/4	36	36	36	B12	B13	3/4	851A	P40J
209A	363.00	318.00	7005	50	50	701	701	50	36	36	A13	A13	3/4	36	36	36	B13	B13	3/4	861A	P40J
212A	363.00	318.00	7006	50	50	701	701	50	36	36	A13	A12	13/16	36	36	36	B13	B13	3/4	851F	P40J
215A	363.00	318.00	7006	50	50	701	701	50	36	36	A12	A12	15/16	36	36	36	B13	B12	3/4	867A	P40J
218A	363.00	318.00	7011	50	50	702	702	50	36	36	A12	A12	1-1/16	36	36	36	B12	B12	7/8	851E	P40J
221A	363.00	318.00	7010	50	50	702	702	50	36	36	A12	A12	1-1/16	36	36	36	B12	B12	7/8	851E	P40J
224A	363.00	318.00	7008	55	55	701	701	55	36	36	A12	A12	1-1/16	36	36	36	B12	B12	7/8	852C	P40J
227A	363.00	318.00	7008	55	55	701	701	55	36	36	A12	A11	1-1/8	36	36	36	B12	B11	15/16	870A	P40J
230A	363.00	318.00	7008	60	60	701	701	60	36	36	A11	A11	1-1/8	36	36	36	B11	B11	15/16	851B	P40J
233A	363.00	318.00	7008	60	60	701	701	60	36	36	A11	A12	1-1/8	36	36	36	B11	B11	15/16	851D	P40J
236A	363.00	318.00	7008	60	60	701	701	60	36	36	A12	A12	1-1/8	36	36	36	B11	B11	15/16	872A	P40J
239A	363.00	318.00	7010	60	60	702	702	60	36	36	A12	A12	1-1/8	36	36	36	B11	B11	1	851B	P40J
242A	363.00	318.00	7011	60	60	702	702	60	36	36	A12	A12	1-1/8	36	36	36	B11	B11	1	855B	P40J
◆245A	363.00	318.00	7028	60	60	701	701	60	36	36	A12	A12	1-1/16	36	36	36	B11	B12	13/16	851A	P40J
◆248A	363.00	318.00	7027	60	60	701	701	60	36	36	A12	A13	7/8	36	36	36	B12	B13	3/4	854A	P40J
◆251A	363.00	318.00	7026	60	60	701	701	60	36	36	A13	A13	13/16	36	36	36	B13	B13	3/4	852A	P40J
◆254A	363.00	318.00	7026	60	60	701	701	60	36	36	A13	A12	13/16	36	36	36	B13	B11	3/4	851A	P40J
◆257A	363.00	318.00	6025	60	60	701	701	60	36	36	A12	A14	13/16	36	36	36	B11	B11	3/4	848A	P40J
◆259A	363.00	318.00	5023	60	60	501	501	60	36	36	A14	-	3/4	36	36	36	B11	-	3/4	850A	P42B

◆ Indicates column type and Fy revisions per approved Fabricator's request.

1-A2-7

LICENSED PROFESSIONAL ENGINEER — LESLIE E. ROBERTSON — No. 34360 — STATE OF NEW YORK

SKILLING-HELLE-CHRISTIANSEN-ROBERTSON — Civil & Structural Engineers

PROJECT THE WORLD TRADE CENTER | TITLE EXTERIOR WALL TO EL.363 - COLUMN SCHEDULE | DATE 01-10-68

REVISIONS

2-15-68

COLUMN NUMBER	UPPER SPLICE ELEV.	LOWER SPLICE ELEV.	COLUMN TYPE	COLUMN FY1	COLUMN FY2	COLUMN UCS	COLUMN LCS	SPANDREL EL. 350 FY5	SPANDREL EL. 350 FY6	SPANDREL EL. 350 FY7	SPANDREL EL. 350 SCL	SPANDREL EL. 350 SCR	SPANDREL EL. 350 WELD 6	SPANDREL EL. 332 FY8	SPANDREL EL. 332 FY9	SPANDREL EL. 332 FY10	SPANDREL EL. 332 SCL	SPANDREL EL. 332 SCR	SPANDREL EL. 332 WELD 5	SPANDREL EL. 332 SDT	SEAT PLZ
301A	363.00	318.00	5003	55	55	501	501	55	36	36	-	A14	3/4	36	36	36	-	B11	3/4	850A	P42C
303A	363.00	318.00	6009	60	60	702	702	60	36	36	A14	A12	13/16	36	36	36	B11	B11	3/4	844A	P40H
306A	363.00	318.00	7013	60	60	703	703	60	36	36	A12	A12	15/16	36	36	36	B11	B12	3/4	843A	P40H
309A	363.00	318.00	7016	55	55	704	704	55	36	36	A12	A12	1-1/16	36	36	36	B12	B12	13/16	842A	P40H
312A	363.00	318.00	7217	55	55	704	704	55	36	36	A12	A12	1-1/8	36	36	36	B12	B12	F.P.	841B	P40H
315A	363.00	318.00	7217	55	55	704	704	55	36	36	A12	A11	1-3/16	36	36	36	B12	B11	F.P.	840D	P40H
318A	363.00	318.00	7217	50	50	704	704	50	36	36	A11	A11	1-1/4	36	36	36	B11	B11	F.P.	840C	P40H
321A	363.00	318.00	7217	50	50	704	704	50	36	36	A11	A11	1-5/16	36	36	36	B11	B11	F.P.	840A	P40H
324A	363.00	318.00	7217	50	50	704	704	50	36	36	A11	A11	1-5/16	36	36	36	B11	B11	F.P.	840A	P40H
327A	363.00	318.00	7318	45	45	704	704	45	36	36	A11	A11	1-5/16	36	36	36	B11	B11	F.P.	840A	P40H
330A	363.00	318.00	7419	42	42	704	704	42	36	36	A11	A11	1-5/16	36	36	36	B11	B11	F.P.	839A	P40H
333A	363.00	318.00	7419	42	42	704	704	42	36	36	A11	A11	1-5/16	36	36	36	B11	B11	F.P.	840A	P41A
336A	363.00	318.00	7419	42	42	704	704	42	36	36	A11	A11	1-5/16	36	36	36	B11	B11	F.P.	840A	P40G
339A	363.00	318.00	7419	45	45	704	704	45	36	36	A11	A11	1-5/16	36	36	36	B11	B11	F.P.	840A	P40F
342A	363.00	318.00	7318	45	45	704	704	45	36	36	A11	A11	1-1/4	36	36	36	B11	B11	F.P.	840B	P40E
345A	363.00	318.00	7217	45	45	704	704	45	36	36	A11	A12	1-3/16	36	36	36	B11	B12	F.P.	840D	P40D
348A	363.00	318.00	7217	50	50	704	704	50	36	36	A12	A12	1-1/8	36	36	36	B12	B12	F.P.	841A	-
351A	363.00	318.00	7016	50	50	704	704	50	36	36	A12	A12	1-1/16	36	36	36	B12	B12	13/16	842A	-
354A	363.00	318.00	7013	50	50	703	706	50	36	36	A12	A12	15/16	36	36	36	B12	B12	3/4	843A	-
357A	363.00	318.00	6009	55	55	702	702	55	36	36	A12	A14	13/16	36	36	36	B12	B11	3/4	844A	-
359A	363.00	318.00	5003	55	55	501	501	55	36	36	A14	-	3/4	36	36	36	B11	-	3/4	850A	-
◈401A	363.00	318.00	5024	60	60	501	501	60	36	36	-	A14	3/4	36	36	36	-	B11	3/4	850A	-
◈403A	363.00	318.00	6025	60	60	701	701	60	36	36	A14	A12	13/16	36	36	36	B11	B11	3/4	848A	-
406A	363.00	318.00	7005	60	60	701	701	60	36	36	A12	A13	13/16	36	36	36	B11	B13	3/4	851A	-
409A	363.00	318.00	7005	60	60	701	701	60	36	36	A13	A13	13/16	36	36	36	B13	B13	3/4	852A	-
412A	363.00	318.00	7006	60	60	701	701	60	36	36	A13	A12	7/8	36	36	36	B13	B12	3/4	854A	-
415A	363.00	318.00	7007	60	60	701	701	60	36	36	A12	A12	1-1/16	36	36	36	B12	B11	13/16	851A	-
418A	363.00	318.00	7011	60	60	702	702	60	36	36	A12	A12	1-1/8	36	36	36	B11	B11	1	855A	-
421A	363.00	318.00	7010	55	55	702	702	55	36	36	A12	A12	1-1/8	36	36	36	B11	B11	1	851B	-
424A	363.00	318.00	7008	55	55	701	701	55	36	36	A12	A12	1-1/8	36	36	36	B11	B11	1	858A	-
427A	363.00	318.00	7008	55	55	701	701	55	36	36	A12	A11	1-1/8	36	36	36	B11	B11	1	851C	-
430A	363.00	318.00	7008	55	55	701	701	55	36	36	A11	A11	1-1/8	36	36	36	B11	B11	15/16	852B	-
433A	363.00	318.00	7008	50	50	701	701	50	36	36	A11	A12	1-1/8	36	36	36	B11	B12	15/16	851A	-
436A	363.00	318.00	7008	50	50	701	701	50	36	36	A12	A12	1-1/16	36	36	36	B12	B12	15/16	858A	-
439A	363.00	318.00	7010	50	50	701	701	50	36	36	A12	A12	1-1/16	36	36	36	B12	B12	15/16	851B	-
442A	363.00	318.00	7011	50	50	702	702	50	36	36	A12	A12	1-1/16	36	36	36	B12	B12	15/16	855A	-
445A	363.00	318.00	7007	50	50	701	701	50	36	36	A12	A12	1	36	36	36	B12	B13	3/4	851A	-
448A	363.00	318.00	7006	50	50	701	701	50	36	36	A12	A13	13/16	36	36	36	B13	B13	3/4	854A	-
451A	363.00	318.00	7005	50	50	701	701	50	36	36	A13	A13	13/16	36	36	36	B13	B13	3/4	852A	-
454A	363.00	318.00	7005	50	50	701	701	50	36	36	A13	A12	3/4	36	36	36	B13	B12	3/4	851A	-
457A	363.00	318.00	6004	55	55	701	701	55	36	36	A12	A14	3/4	36	36	36	B12	B11	3/4	848A	-
◈459A	363.00	318.00	5022	60	60	501	501	60	36	36	A14	-	3/4	36	36	36	B11	-	3/4	850A	-

◈ Indicates column type and Fy revisions per approved Fabricator's request.

1-A2- 8

LICENSED PROFESSIONAL ENGINEER LESLIE E. ROBERTSON No. 34360 UNIVERSITY OF THE STATE OF NEW YORK

WORTHINGTON, SKILLING, HELLE & JACKSON — Civil & Structural Engineers

PROJECT THE WORLD TRADE CENTER | TITLE EXTERIOR WALL TO EL.363 - SPANDREL,STRUT + BRACING SCH | DATE 2-17-67

REVISIONS

* REV 3-15-67

MEMBER NUMBER	LENGTH FT	LENGTH INCHES	MEMBER TYPE	MEMBER FY1	MEMBER FY2	CONN DET LFT	CONN DET RGT	WELD NO. 1 CNO	WELD NO. 1 SIZE	CNO	SIZE	CNO	SIZE	CNO	SIZE	CNO	SIZE
(1)	(2)		(3)	(4)	(5)	(6)	(7)	(8)	(9)	(8)	(9)	(8)	(9)	(8)	(9)	(8)	(9)

NOTES -
(1) MEMBER NUMBER - SEE DRAWINGS SA-125,SA-126,SA-127 AND SA-128 FOR LOCATION OF MEMBERS
(2) LENGTH OF MEMBER - LENGTH INDICATED IS CENTER LINE TO CENTER LINE OF COLUMN OR WORKPOINT TO WORK POINT
(3) MEMBER TYPE - FOR DIMENSIONS, PLATE THICKNESS AND WELDS SEE PAGES 1-A2-45 THRU 57
(4) REQUIRED YIELD STRENGTH OF PLATE NO. 1 (KSI)
(5) REQUIRED YIELD STRENGTH OF PLATE NO. 2 (KSI)
*(6) DETAIL NUMBER FOR CONNECTION AT LEFT END OF MEMBER - SEE PAGES 1-A2-60 THRU 66
(NOTE - MEMBERS ARE SHOWN FROM INSIDE OF TOWER LOOKING OUT)
*(7) DETAIL NUMBER FOR CONNECTION AT RIGHT END OF MEMBER - SEE PAGES 1-A2-60 THRU 66
(8) COLUMN NUMBER AT WHICH WELD NO. 1 OF SIZE SHOWN IN (9) APPLIES . SEE MEMBER TYPE FOR DETAILS OF WELD NO. 1
(9) SIZE OF WELD NO. 1 AT LOCATION INDICATED IN (8)

LICENSED PROFESSIONAL ENGINEER
LESLIE E. ROBERTSON
No. 34360
UNIVERSITY OF THE STATE OF NEW YORK

WORTHINGTON, SKILLING, HELLE & JACKSON — Civil & Structural Engineers

PROJECT THE WORLD TRADE CENTER | TITLE EXTERIOR WALL TO EL.363 - SPANDREL AND STRUT SCHEDULE | DATE 2-17-67

REVISIONS | REV 3-15-67

MEMBER NUMBER	LENGTH FT	LENGTH INCHES	MEMBER TYPE	MEMBER FY1	MEMBER FY2	CONN DET LFT	CONN DET RGT	WELD NO. 1 CNO	WELD NO. 1 SIZE	CNO	SIZE	CNO	SIZE	CNO	SIZE	CNO	SIZE
C101A	36	8	C41	36	36	1	3	101	1/2	103	1/2	106	11/16	109	3/4	112	3/4
C102A	40	0	C41	36	36	3	3	112	3/4	115	7/8	118	1-1/8	121	1	124	13/16
C103A	40	0	C41	36	36	3	3	124	13/16	127	1	130	1-3/16	133	1	136	13/16
C104A	40	0	C41	36	36	3	3	136	13/16	139	7/8	142	1	145	7/8	148	11/16
C105A	36	8	C41	36	36	3	1	148	11/16	151	3/4	154	11/16	157	1/2	159	1/2
D101A	36	8	D41	42	36	4	6	101	1/2	103	1/2	106	9/16	109	1/2	112	9/16
D102A	40	0	D41	42	36	6	6	112	9/16	115	1/2	118	11/16	121	9/16	124	9/16
D103A	40	0	D41	42	36	6	6	124	9/16	127	9/16	130	11/16	133	9/16	136	9/16
D104A	40	0	D41	42	36	6	6	136	9/16	139	9/16	142	11/16	145	9/16	148	9/16
D105A	36	8	D41	42	36	6	5	148	9/16	151	1/2	154	9/16	157	1/2	159	1/2
E101A	36	8	E41	36	36	11	13	101	5/8	103	3/8	106	3/8	109	3/8	112	5/8
E102A	40	0	E42	36	36	13	13	112	5/8	115	1/2	118	1/2	121	1/2	124	5/8
E103A	40	0	E42	36	36	13	14	124	5/8	127	1/2	130	1/2	133	1/2	136	5/8
E104A	40	0	E42	36	36	14	14	136	5/8	139	1/2	142	1/2	145	1/2	148	5/8
E105A	36	8	E41	36	36	14	12	148	5/8	151	3/8	154	3/8	157	3/8	159	5/8
F101A	16	8	F21	36	36	15	17	101	5/16	103	5/16	-	-	-	-	-	-
F102A	40	0	F41	36	36	17	19	-	-	109	3/8	112	1/2	115	1/2	-	-
F103A	40	0	F41	36	36	19	20	-	-	121	1/2	124	1/2	127	1/2	-	-
F104A	40	0	F41	36	36	20	20	-	-	133	1/2	136	1/2	139	1/2	-	-
F105A	40	0	F41	36	36	20	18	-	-	145	1/2	148	1/2	151	3/8	-	-
F106A	16	8	F22	36	36	18	16	-	-	157	5/16	159	5/16	-	-	-	-
H101A	36	8	H41	36	36	21	23	-	-	103	3/8	106	3/8	109	3/8	-	-
H102A	40	0	H41	36	36	23	23	-	-	115	1/2	118	1/2	121	1/2	-	-
H103A	40	0	H41	36	36	23	23	-	-	127	1/2	130	1/2	133	1/2	-	-
H104A	40	0	H41	36	36	23	23	-	-	139	1/2	142	1/2	145	1/2	-	-
H105A	36	8	H41	36	36	23	22	-	-	151	3/8	154	3/8	157	3/8	-	-

LICENSED PROFESSIONAL ENGINEER LESLIE E. ROBERTSON No. 34360 STATE OF NEW YORK

1-A2- 10

WORTHINGTON, SKILLING, HELLE & JACKSON Civil & Structural Engineers

PROJECT THE WORLD TRADE CENTER | TITLE EXTERIOR WALL TO EL.363 . BRACING SCHEDULE | DATE 2-17-67

REVISIONS

REV 3-15-67

MEMBER NUMBER	LENGTH FT	LENGTH INCHES	MEMBER TYPE	MEMBER FY1	MEMBER FY2	CONN DET LFT	CONN DET RGT	WELD NO. 1 CNO	WELD NO. 1 SIZE	CNO	SIZE	CNO	SIZE	CNO	SIZE	CNO	SIZE
G101A	26	5-13/16	G21	36	36	11	17	101	5/8	103	3/8	106	3/8	-	-	-	-
G102A	43	0- 9/16	G31	50	36	17	10	106	3/8	109	3/8	112	5/8	115	1/2	-	-
G103A	28	8- 3/8	G21	45	36	13	19	112	5/8	115	1/2	118	1/2	-	-	-	-
G104A	43	0- 9/16	G31	45	36	19	10	118	1/2	121	1/2	124	5/8	127	9/16	-	-
G105A	28	8- 3/8	G21	50	36	13	20	124	5/8	127	1/2	130	1/2	-	-	-	-
G106A	28	8- 3/8	G21	42	36	20	14	130	1/2	133	1/2	136	5/8	-	-	-	-
G107A	43	0- 9/16	G32	50	36	9	19	133	9/16	136	5/8	139	1/2	142	1/2	-	-
G108A	28	8- 3/8	G21	36	36	19	14	142	1/2	145	1/2	148	5/8	-	-	-	-
G109A	43	0- 9/16	G33	50	36	9	18	145	9/16	148	5/8	151	3/8	154	3/8	-	-
G110A	26	5-13/16	G21	36	36	18	12	154	3/8	157	3/8	159	5/8	-	-	-	-
G111A	12	3- 1/8	G11	36	36	11	7	101	5/8	103	1/2	-	-	-	-	-	-
G112A	14	4- 3/16	G11	42	36	9	13	109	1/2	112	5/8	-	-	-	-	-	-
G113A	14	4- 3/16	G11	45	36	9	13	121	9/16	124	5/8	-	-	-	-	-	-
G114A	14	4- 3/16	G11	42	36	14	10	136	5/8	139	9/16	-	-	-	-	-	-
G115A	14	4- 3/16	G11	36	36	14	10	148	5/8	151	1/2	-	-	-	-	-	-
G116A	12	3- 1/8	G11	36	36	8	12	157	1/2	159	5/8	-	-	-	-	-	-
G117A	26	7- 3/8	G21	50	36	21	17	-	-	103	3/8	106	3/8	-	-	-	-
G118A	28	9-13/16	G21	36	36	17	23	106	3/8	109	3/8	-	-	-	-	-	-
G119A	28	9-13/16	G21	45	36	23	19	-	-	115	1/2	118	1/2	-	-	-	-
G120A	28	9-13/16	G21	45	36	19	23	118	1/2	121	1/2	-	-	-	-	-	-
G121A	28	9-13/16	G21	42	36	23	20	-	-	127	1/2	130	1/2	-	-	-	-
G122A	28	9-13/16	G21	50	36	20	23	130	1/2	133	1/2	-	-	-	-	-	-
G123A	28	9-13/16	G21	36	36	23	19	-	-	139	1/2	142	1/2	-	-	-	-
G124A	28	9-13/16	G22	50	36	19	23	142	1/2	145	1/2	-	-	-	-	-	-
G125A	28	9-13/16	G21	36	36	23	18	-	-	151	3/8	154	3/8	-	-	-	-
G126A	26	7- 3/8	G23	50	36	18	22	154	3/8	157	3/8	-	-	-	-	-	-

LICENSED PROFESSIONAL ENGINEER LESLIE E. ROBERTSON No. 34360 THE STATE OF NEW YORK

1-A2- 11

SKILLING-HELLE-CHRISTIANSEN-ROBERTSON — Civil & Structural Engineers

PROJECT THE WORLD TRADE CENTER | TITLE EXTERIOR WALL TO EL.363 - SPANDREL AND STRUT SCHEDULE | DATE 2-17-67

REVISIONS
5-8-67
2-15-68

MEMBER NUMBER	LENGTH FT	LENGTH INCHES	MEMBER TYPE	MEMBER FY1	MEMBER FY2	CONN DET LFT	CONN DET RGT	WELD NO. 1 CNO	WELD NO. 1 SIZE	CNO	SIZE	CNO	SIZE	CNO	SIZE	CNO	SIZE
C201A	36	8	C411	36	36	1	3	201	1/2	203	1/2	206	5/8	209	5/8	212	5/8
C202A	40	0	C41	42	36	3	3	212	5/8	215	3/4	218	13/16	221	13/16	224	3/4
C203A	40	0	C41	45	36	3	3	224	3/4	227	13/16	230	15/16	233	7/8	236	3/4
C204A	40	0	C41	42	36	3	3	236	3/4	239	13/16	242	15/16	245	13/16	248	5/8
C205A	36	8	C41	36	36	3	1	248	5/8	251	5/8	254	5/8	257	1/2	259	1/2
D201A	36	8	D41	42	36	4	6	201	5/8	203	1/2	206	5/8	209	1/2	212	1/2
D202A	40	0	D41	42	36	6	6	212	1/2	215	1/2	218	11/16	221	9/16	224	9/16
D203A	40	0	D41	42	36	6	6	224	9/16	227	9/16	230	3/4	233	5/8	236	9/16
D204A	40	0	D41	42	36	6	6	236	9/16	239	5/8	242	3/4	245	5/8	248	9/16
D205A	36	8	D41	42	36	6	5	248	9/16	251	1/2	254	9/16	257	1/2	259	5/8
E201A	36	8	E41	36	36	11	13	201	5/8	203	3/8	206	3/8	209	3/8	212	1/2
E202A	40	0	E42	36	36	13	13	212	1/2	215	3/8	218	3/8	221	3/8	224	1/2
E203A	40	0	E42	36	36	13	14	224	1/2	227	3/8	230	3/8	233	3/8	236	1/2
E204A	40	0	E42	36	36	14	14	236	1/2	239	3/8	242	3/8	245	3/8	248	1/2
E205A	36	8	E41	36	36	14	12	248	1/2	251	3/8	254	3/8	257	3/8	259	5/8
F201A	16	8	F21	36	36	15	17	201	5/16	203	5/16	-	-	-	-	-	-
F202A	40	0	F41	36	36	17	19	-	-	209	5/16	212	5/16	215	5/16	-	-
F203A	40	0	F41	36	36	19	20	-	-	221	5/16	224	5/16	227	5/16	-	-
F204A	40	0	F41	36	36	20	20	-	-	233	5/16	236	5/16	239	5/16	-	-
F205A	40	0	F41	36	36	20	18	-	-	245	5/16	248	5/16	251	5/16	-	-
F206A	16	8	F22	36	36	18	16	-	-	257	5/16	259	5/16	-	-	-	-
H201A	36	8	H41	36	36	21	23	-	-	203	3/8	206	3/8	209	3/8	-	-
H202A	40	0	H41	36	36	23	23	-	-	215	3/8	218	3/8	221	3/8	-	-
H203A	40	0	H41	36	36	23	23	-	-	227	3/8	230	3/8	233	3/8	-	-
H204A	40	0	H41	36	36	23	23	-	-	239	3/8	242	3/8	245	3/8	-	-
H205A	36	8	H41	36	36	23	22	-	-	251	3/8	254	3/8	257	3/8	-	-

LICENSED PROFESSIONAL ENGINEER
LESLIE E. ROBERTSON
No. 34360
UNIVERSITY OF THE STATE OF NEW YORK

WORTHINGTON, SKILLING, HELLE & JACKSON Civil & Structural Engineers

PROJECT THE WORLD TRADE CENTER | TITLE EXTERIOR WALL TO EL.363 . BRACING SCHEDULE | DATE 2-17-67

REVISIONS

REV 3-15-67

MEMBER NUMBER	LENGTH FT	LENGTH INCHES	MEMBER TYPE	MEMBER FY1	MEMBER FY2	CONN DET LFT	CONN DET RGT	WELD NO. 1 CNO	WELD NO. 1 SIZE	CNO	SIZE	CNO	SIZE	CNO	SIZE	CNO	SIZE
G201A	26	5-13/16	G21	36	36	11	17	201	5/8	203	3/8	206	3/8	-	-	-	-
G202A	43	0- 9/16	G31	50	36	17	10	206	3/8	209	3/8	212	1/2	215	3/8	-	-
G203A	28	8- 3/8	G21	42	36	13	19	212	1/2	215	3/8	218	3/8	-	-	-	-
G204A	28	8- 3/8	G21	45	36	19	14	218	3/8	221	3/8	224	1/2	-	-	-	-
G205A	43	0- 9/16	G32	50	36	9	19	221	9/16	224	1/2	227	3/8	230	3/8	-	-
G206A	28	8- 3/8	G21	42	36	19	14	230	3/8	233	3/8	236	1/2	-	-	-	-
G207A	43	0- 9/16	G32	50	36	9	19	233	5/8	236	1/2	239	3/8	242	3/8	-	-
G208A	28	8- 3/8	G21	36	36	19	14	242	3/8	245	3/8	248	1/2	-	-	-	-
G209A	43	0- 9/16	G33	50	36	9	18	245	5/8	248	1/2	251	3/8	254	3/8	-	-
G210A	26	5-13/16	G21	36	36	18	12	254	3/8	257	3/8	259	5/8	-	-	-	-
G211A	12	3- 1/8	G11	36	36	11	7	201	5/8	203	1/2	-	-	-	-	-	-
G212A	14	4- 3/16	G11	42	36	9	13	209	1/2	212	1/2	-	-	-	-	-	-
G213A	14	4- 3/16	G11	45	36	14	10	224	1/2	227	9/16	-	-	-	-	-	-
G214A	14	4- 3/16	G11	36	36	14	10	236	1/2	239	5/8	-	-	-	-	-	-
G215A	14	4- 3/16	G11	36	36	14	10	248	1/2	251	1/2	-	-	-	-	-	-
G216A	12	3- 1/8	G11	36	36	8	12	257	1/2	259	5/8	-	-	-	-	-	-
G217A	26	7- 3/8	G21	50	36	21	17	-	-	203	3/8	206	3/8	-	-	-	-
G218A	28	9-13/16	G21	36	36	17	23	206	3/8	209	3/8	-	-	-	-	-	-
G219A	28	9-13/16	G21	45	36	23	19	-	-	215	3/8	218	3/8	-	-	-	-
G220A	28	9-13/16	G21	42	36	19	23	218	3/8	221	3/8	-	-	-	-	-	-
G221A	28	9-13/16	G21	42	36	23	19	-	-	227	3/8	230	3/8	-	-	-	-
G222A	28	9-13/16	G22	50	36	19	23	230	3/8	233	3/8	-	-	-	-	-	-
G223A	28	9-13/16	G21	36	36	23	19	-	-	239	3/8	242	3/8	-	-	-	-
G224A	28	9-13/16	G22	50	36	19	23	242	3/8	245	3/8	-	-	-	-	-	-
G225A	28	9-13/16	G21	36	36	23	18	-	-	251	3/8	254	3/8	-	-	-	-
G226A	26	7- 3/8	G23	50	36	18	22	254	3/8	257	3/8	-	-	-	-	-	-

LICENSED PROFESSIONAL ENGINEER LESLIE E. ROBERTSON No. 34360 UNIVERSITY OF THE STATE OF NEW YORK

1-A2- 13

WORTHINGTON, SKILLING, HELLE & JACKSON Civil & Structural Engineers

PROJECT THE WORLD TRADE CENTER | TITLE EXTERIOR WALL TO EL.363 - SPANDREL AND STRUT SCHEDULE | DATE 2-17-67

REVISIONS

REV 3-15-67

MEMBER NUMBER	LENGTH FT	LENGTH INCHES	MEMBER TYPE	MEMBER FY1	MEMBER FY2	CONN DET LFT	CONN DET RGT	WELD NO. 1 CNO	WELD NO. 1 SIZE	CNO	SIZE	CNO	SIZE	CNO	SIZE	CNO	SIZE
C301A	36	8	C41	36	36	1	3	301	1/2	303	1/2	306	11/16	309	11/16	312	11/16
C302A	40	0	C41	45	36	3	3	312	11/16	315	7/8	318	1	321	15/16	324	13/16
C303A	40	0	C41	50	36	3	3	324	13/16	327	1	330	1-3/16	333	1	336	13/16
C304A	40	0	C41	45	36	3	3	336	13/16	339	1	342	1-1/8	345	15/16	348	3/4
C305A	36	8	C41	36	36	3	1	348	3/4	351	3/4	354	11/16	357	1/2	359	1/2
D301A	36	8	D41	42	36	4	6	301	1/2	303	1/2	306	1/2	309	1/2	312	1/2
D302A	40	0	D41	42	36	6	6	312	1/2	315	9/16	318	5/8	321	9/16	324	9/16
D303A	40	0	D41	42	36	6	6	324	9/16	327	5/8	330	11/16	333	9/16	336	9/16
D304A	40	0	D41	42	36	6	6	336	9/16	339	9/16	342	11/16	345	9/16	348	9/16
D305A	36	8	D41	42	36	6	5	348	9/16	351	1/2	354	9/16	357	1/2	359	1/2
E301A	36	8	E41	36	36	11	13	301	5/8	303	3/8	306	3/8	309	3/8	312	5/8
E302A	40	0	E42	36	36	13	13	312	5/8	315	1/2	318	1/2	321	1/2	324	5/8
E303A	40	0	E42	36	36	13	14	324	5/8	327	1/2	330	1/2	333	1/2	336	5/8
E304A	40	0	E42	36	36	14	14	336	5/8	339	1/2	342	1/2	345	1/2	348	5/8
E305A	36	8	E41	36	36	14	12	348	5/8	351	3/8	354	3/8	357	3/8	359	5/8
F301A	16	8	F21	36	36	15	17	301	5/16	303	5/16	-	-	-	-	-	-
F302A	40	0	F41	36	36	17	19	-	-	309	3/8	312	1/2	315	1/2	-	-
F303A	40	0	F41	36	36	19	20	-	-	321	1/2	324	1/2	327	1/2	-	-
F304A	40	0	F41	36	36	20	20	-	-	333	1/2	336	1/2	339	1/2	-	-
F305A	40	0	F41	36	36	20	18	-	-	345	1/2	348	1/2	351	3/8	-	-
F306A	16	8	F22	36	36	18	16	-	-	357	5/16	359	5/16	-	-	-	-
H301A	36	8	H41	36	36	21	23	-	-	303	3/8	306	3/8	309	3/8	-	-
H302A	40	0	H41	36	36	23	23	-	-	315	1/2	318	1/2	321	1/2	-	-
H303A	40	0	H41	36	36	23	23	-	-	327	1/2	330	1/2	333	1/2	-	-
H304A	40	0	H41	36	36	23	23	-	-	339	1/2	342	1/2	345	1/2	-	-
H305A	36	8	H41	36	36	23	22	-	-	351	3/8	354	3/8	357	3/8	-	-

LICENSED PROFESSIONAL ENGINEER LESLIE E. ROBERTSON No. 34360 UNIVERSITY OF THE STATE OF NEW YORK

WORTHINGTON, SKILLING, HELLE & JACKSON Civil & Structural Engineers

PROJECT THE WORLD TRADE CENTER | TITLE EXTERIOR WALL TO EL.363 . BRACING SCHEDULE | DATE 2-17-67

REVISIONS | REV 3-15-67

MEMBER NUMBER	LENGTH FT	LENGTH INCHES	MEMBER TYPE	MEMBER FY1	MEMBER FY2	CONN DET LFT	CONN DET RGT	WELD NO. 1 CNO	WELD NO. 1 SIZE	CNO	SIZE	CNO	SIZE	CNO	SIZE	CNO	SIZE
G301A	26	5-13/16	G21	36	36	11	17	301	5/8	303	3/8	306	3/8	-	-	-	-
G302A	43	0- 9/16	G33	50	36	17	10	306	3/8	309	3/8	312	5/8	315	9/16	-	-
G303A	28	8- 3/8	G21	42	36	13	20	312	5/8	315	1/2	318	1/2	-	-	-	-
G304A	43	0- 9/16	G32	50	36	20	10	318	1/2	321	1/2	324	5/8	327	5/8	-	-
G305A	28	8- 3/8	G21	45	36	13	20	324	5/8	327	1/2	330	1/2	-	-	-	-
G306A	28	8- 3/8	G21	50	36	20	14	330	1/2	333	1/2	336	5/8	-	-	-	-
G307A	43	0- 9/16	G31	50	36	9	20	333	9/16	336	5/8	339	1/2	342	1/2	-	-
G308A	28	8- 3/8	G21	45	36	20	14	342	1/2	345	1/2	348	5/8	-	-	-	-
G309A	43	0- 9/16	G32	50	36	9	18	345	9/16	348	5/8	351	3/8	354	3/8	-	-
G310A	26	5-13/16	G21	36	36	18	12	354	1/2	357	1/2	359	5/8	-	-	-	-
G311A	12	3- 1/18	G11	36	36	11	7	301	5/8	303	1/2	-	-	-	-	-	-
G312A	14	4- 3/16	G11	36	36	9	13	309	1/2	312	5/8	-	-	-	-	-	-
G313A	14	4- 3/16	G11	42	36	9	13	321	9/16	324	5/8	-	-	-	-	-	-
G314A	14	4- 3/16	G11	45	36	14	10	336	5/8	339	9/16	-	-	-	-	-	-
G315A	14	4- 3/16	G11	42	36	14	10	348	5/8	351	1/2	-	-	-	-	-	-
G316A	12	3- 1/8	G11	36	36	8	12	357	1/2	359	5/8	-	-	-	-	-	-
G317A	26	7- 3/8	G23	50	36	21	17	-	-	303	3/8	306	3/8	-	-	-	-
G318A	28	9-13/16	G21	36	36	17	23	306	3/8	309	3/8	-	-	-	-	-	-
G319A	28	9-13/16	G21	50	36	23	20	-	-	315	1/2	318	1/2	-	-	-	-
G320A	28	9-13/16	G21	42	36	20	23	318	1/2	321	1/2	-	-	-	-	-	-
G321A	28	9-13/16	G21	50	36	23	20	-	-	327	1/2	330	1/2	-	-	-	-
G322A	28	9-13/16	G21	45	36	20	23	330	1/2	333	1/2	-	-	-	-	-	-
G323A	28	9-13/16	G21	45	36	23	20	-	-	339	1/2	342	1/2	-	-	-	-
G324A	28	9-13/16	G21	50	36	20	23	342	1/2	345	1/2	-	-	-	-	-	-
G325A	28	9-13/16	G21	36	36	23	18	-	-	351	3/8	354	3/8	-	-	-	-
G326A	26	7- 3/8	G22	50	36	18	22	354	3/8	357	3/8	-	-	-	-	-	-

X

LICENSED PROFESSIONAL ENGINEER LESLIE E. ROBERTSON No. 34360 UNIVERSITY OF THE STATE OF NEW YORK

1-A2- 15

WORTHINGTON, SKILLING, HELLE & JACKSON Civil & Structural Engineers

PROJECT: THE WORLD TRADE CENTER | TITLE: EXTERIOR WALL TO EL.363 - SPANDREL AND STRUT SCHEDULE | DATE: 2-17-67

REVISIONS

* REV 5-08-67

MEMBER NUMBER	LENGTH FT	LENGTH INCHES	MEMBER TYPE	FY1	FY2	CONN DET LFT	CONN DET RGT	WELD NO. 1 CNO	SIZE	CNO	SIZE	CNO	SIZE	CNO	SIZE	CNO	SIZE
C401A	36	8	C41	36	36	1	3	401	1/2	403	1/2	406	5/8	409	5/8	412	5/8
C402A	40	0	C412	42	36	3	3	412	5/8	415	13/16	418	15/16	421	7/8	424	3/4
C403A	40	0	C413	42	36	3	3	424	3/4	427	7/8	430	15/16	433	13/16	436	3/4
C404A	40	0	C414	42	36	3	3	436	3/4	439	13/16	442	7/8	445	3/4	448	5/8
C405A	36	8	C41	36	36	3	1	448	5/8	451	5/8	454	5/8	457	1/2	459	1/2
D401A	36	8	D41	42	36	4	6	401	1/2	403	1/2	406	9/16	409	1/2	412	9/16
D402A	40	0	D41	42	36	6	6	412	9/16	415	11/16	418	3/4	421	9/16	424	9/16
D403A	40	0	D41	42	36	6	6	424	9/16	427	9/16	430	3/4	433	9/16	436	9/16
D404A	40	0	D41	42	36	6	6	436	9/16	439	9/16	442	11/16	445	1/2	448	5/8
D405A	36	8	D41	42	36	6	5	448	5/8	451	1/2	454	5/8	457	1/2	459	5/8
E401A	36	8	E41	36	36	11	13	401	5/8	403	3/8	406	3/8	409	3/8	412	1/2
E402A	40	0	E42	36	36	13	13	412	1/2	415	3/8	418	3/8	421	3/8	424	1/2
E403A	40	0	E42	36	36	13	14	424	1/2	427	3/8	430	3/8	433	3/8	436	1/2
E404A	40	0	E42	36	36	14	14	436	1/2	439	3/8	442	3/8	445	3/8	448	1/2
E405A	36	8	E41	36	36	14	12	448	1/2	451	3/8	454	3/8	457	3/8	459	5/8
F401A	16	8	F21	36	36	15	17	401	5/16	403	5/16	-	-	-	-	-	-
F402A	40	0	F41	36	36	17	19	-	-	409	5/16	412	5/16	415	5/16	-	-
F403A	40	0	F41	36	36	19	20	-	-	421	5/16	424	5/16	427	5/16	-	-
F404A	40	0	F41	36	36	20	20	-	-	433	5/16	436	5/16	439	5/16	-	-
F405A	40	0	F41	36	36	20	18	-	-	445	5/16	448	5/16	451	5/16	-	-
F406A	16	8	F22	36	36	18	16	-	-	457	5/16	459	5/16	-	-	-	-
H401A	36	8	H41	36	36	21	23	-	-	403	3/8	406	3/8	409	3/8	-	-
H402A	40	0	H41	36	36	23	23	-	-	415	3/8	418	3/8	421	3/8	-	-
H403A	40	0	H41	36	36	23	23	-	-	427	3/8	430	3/8	433	3/8	-	-
H404A	40	0	H41	36	36	23	23	-	-	439	3/8	442	3/8	445	3/8	-	-
H405A	36	8	H41	36	36	23	22	-	-	451	3/8	454	3/8	457	3/8	-	-

LICENSED PROFESSIONAL ENGINEER LESLIE E. ROBERTSON No. 34360 UNIVERSITY OF THE STATE OF NEW YORK

1-82-16

WORTHINGTON, SKILLING, HELLE & JACKSON — Civil & Structural Engineers

PROJECT THE WORLD TRADE CENTER | TITLE EXTERIOR WALL TO EL.363 . BRACING SCHEDULE | DATE 2-17-67

REVISIONS

REV 3-15-67

MEMBER NUMBER	LENGTH FT	LENGTH INCHES	MEMBER TYPE	MEMBER FY1	MEMBER FY2	CONN DET LFT	CONN DET RGT	WELD NO. 1 CNO	WELD NO. 1 SIZE	CNO	SIZE	CNO	SIZE	CNO	SIZE	CNO	SIZE
G401A	26	5-13/16	G21	36	36	11	17	401	5/8	403	3/8	406	3/8	-	-	-	-
G402A	43	0- 9/16	G33	50	36	17	10	406	3/8	409	3/8	412	1/2	415	11/16	-	-
G403A	28	8- 3/8	G21	36	36	13	20	412	1/2	415	3/8	418	3/8	-	-	-	-
G404A	43	0- 9/16	G32	50	36	20	10	418	3/8	421	3/8	424	1/2	427	9/16	-	-
G405A	28	8- 3/8	G21	42	36	13	20	424	1/2	427	3/8	430	3/8	-	-	-	-
G406A	28	8- 3/8	G21	50	36	20	14	430	3/8	433	3/8	436	1/2	-	-	-	-
G407A	43	0- 9/16	G31	50	36	9	20	433	9/16	436	1/2	439	3/8	442	3/8	-	-
G408A	28	8- 3/8	G21	42	36	20	14	442	3/8	445	3/8	448	1/2	-	-	-	-
G409A	43	0- 9/16	G32	50	36	9	18	445	1/2	448	1/2	451	3/8	454	3/8	-	-
G410A	26	5-13/16	G21	36	36	18	12	454	3/8	457	3/8	459	5/8	-	-	-	-
G411A	12	3- 1/8	G11	36	36	11	7	401	5/8	403	1/2	-	-	-	-	-	-
G412A	14	4- 3/16	G11	36	36	9	13	409	1/2	412	1/2	-	-	-	-	-	-
G413A	14	4- 3/16	G11	42	36	9	13	421	9/16	424	1/2	-	-	-	-	-	-
G414A	14	4- 3/16	G11	42	36	14	10	436	1/2	439	9/16	-	-	-	-	-	-
G415A	14	4 3/16	G11	42	36	14	10	448	1/2	451	1/2	-	-	-	-	-	-
G416A	12	3- 1/8	G11	36	36	8	12	457	1/2	459	5/8	-	-	-	-	-	-
G417A	26	7- 3/8	G23	50	36	21	17	-	-	403	3/8	406	3/8	-	-	-	-
G418A	28	9-13/16	G21	50	36	17	23	406	3/8	409	3/8	-	-	-	-	-	-
G419A	28	9-13/16	G22	50	36	23	20	-	-	415	3/8	418	3/8	-	-	-	-
G420A	28	9-13/16	G21	36	36	20	23	418	3/8	421	3/8	-	-	-	-	-	-
G421A	28	9-13/16	G21	50	36	23	20	-	-	427	3/8	430	3/8	-	-	-	-
G422A	28	9-13/16	G21	42	36	20	23	430	3/8	433	3/8	-	-	-	-	-	-
G423A	28	9-13/16	G21	42	36	23	20	-	-	439	3/8	442	3/8	-	-	-	-
G424A	28	9-13/16	G21	50	36	20	23	442	3/8	445	3/8	-	-	-	-	-	-
G425A	28	9-13/16	G21	36	36	23	18	-	-	451	3/8	454	3/8	-	-	-	-
G426A	26	7- 3/8	G22	50	36	18	22	454	3/8	457	3/8	-	-	-	-	-	-

LICENSED PROFESSIONAL ENGINEER
LESLIE E. ROBERTSON
No. 34360
UNIVERSITY OF THE STATE OF NEW YORK

WORTHINGTON, SKILLING, HELLE & JACKSON — Civil & Structural Engineers

PROJECT: THE WORLD TRADE CENTER | TITLE: EXTERIOR WALL TO EL.363 - COLUMN TYPE 1000, 8000, 2000 | DATE: 2-17-67

REVISIONS

* REV 4-24-67

COLUMN TYPE	PLATE 1 T1	PLATE 2 T2	WELD 1	*WELD 2	PLATE 1A T1A	PLATE 2A T2A
*1001	1-1/8	3/4	5/8			
1002	1-3/8	3/4	5/8			
8003	1-3/8	3/4	5/8		1-3/4	5/8
*8023	1-1/8	3/4	5/8		1-7/16	5/8
2004	2-1/4	1	5/8	3/4		
2005	2-3/8	1	5/8	3/4		
2006	2-5/8	1-1/8	5/8	3/4		
2007	3-1/4	1-3/8	5/8	3/4		
2008	3-3/8	1-3/8	5/8	7/8		
2009	3-3/8	1-1/2	11/16	7/8		
2010	3-1/2	1-1/2	11/16	7/8		
2011	3-5/8	1-1/2	11/16	7/8		
2013	4-1/4	1-7/8	3/4	7/8		
2016	4-3/4	2-1/4	3/4	7/8		
2017	5	2-3/4	7/8	1		
2018	5	2-7/8	7/8	1		
2019	5	3	7/8	1		

LICENSED PROFESSIONAL ENGINEER
LESLIE E. ROBERTSON
No. 34360
REGISTERED TO PRACTICE IN THE STATE OF NEW YORK

1-A2- 18

WORTHINGTON, SKILLING, HELLE & JACKSON — Civil & Structural Engineers

PROJECT THE WORLD TRADE CENTER | TITLE EXT. WALL TO EL. 363' - COLUMN TYPE 1000 | DATE 2-17-67

REVISIONS

3-15-67
4-24-67

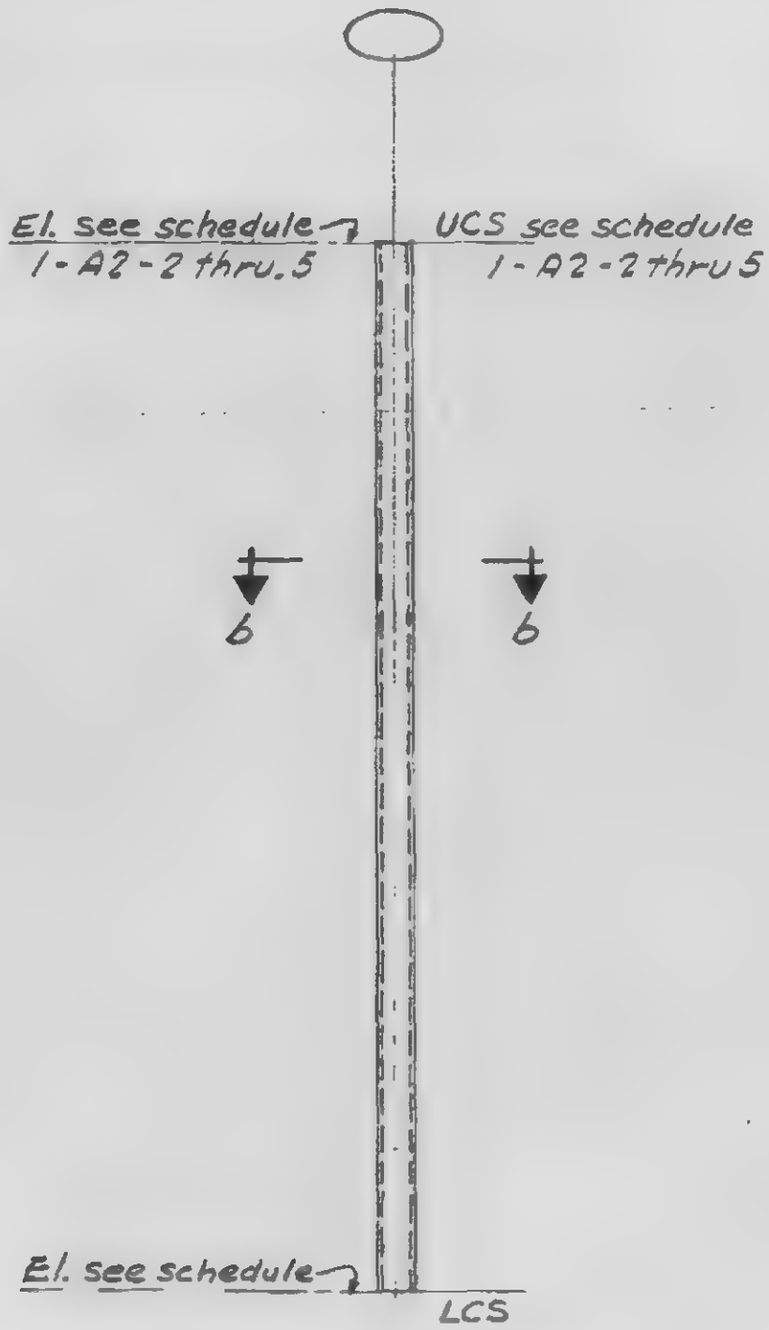

Elevation

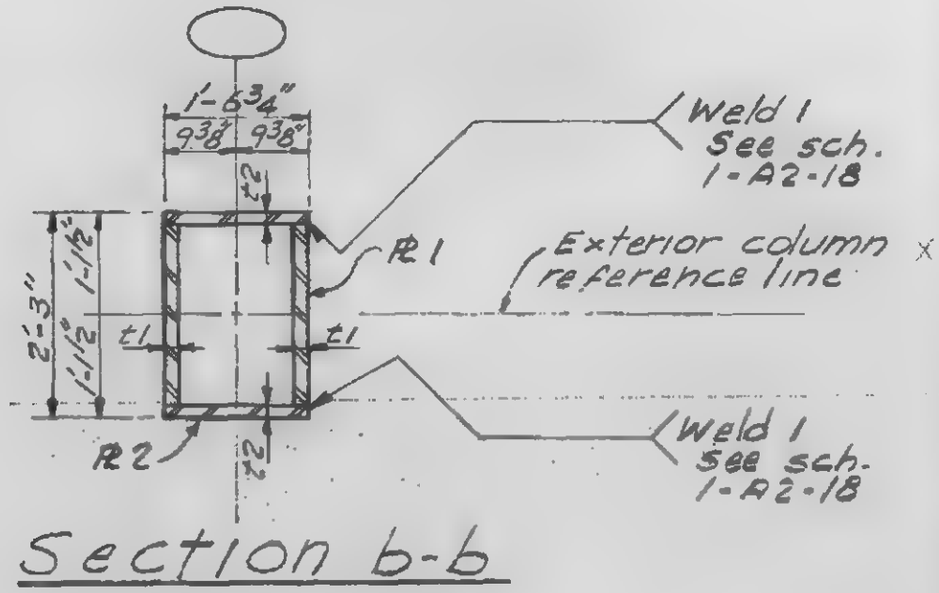

Section 6-6

LICENSED PROFESSIONAL ENGINEER
LESLIE E. ROBERTSON
No. 34360
UNIVERSITY OF THE STATE OF NEW YORK

1-A2-19

WORTHINGTON, SKILLING, HELLE & JACKSON — Civil & Structural Engineers

PROJECT THE WORLD TRADE CENTER | TITLE EXT. WALL TO EL. 363' - COLUMN TYPE 8000 | DATE 2-17-67

REVISIONS

3-15-67
4-24-67

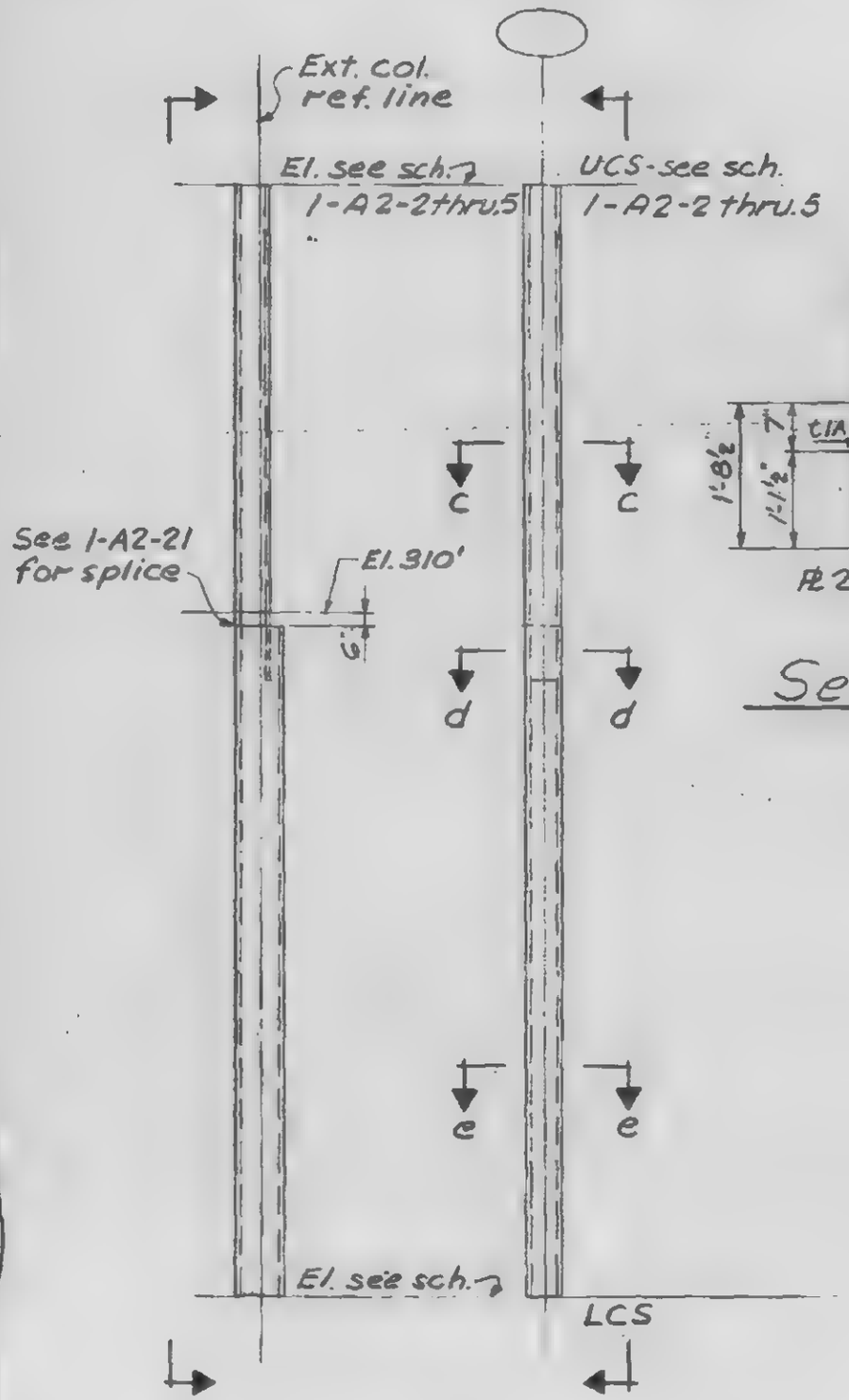

Elev. a-a Elev. b-b

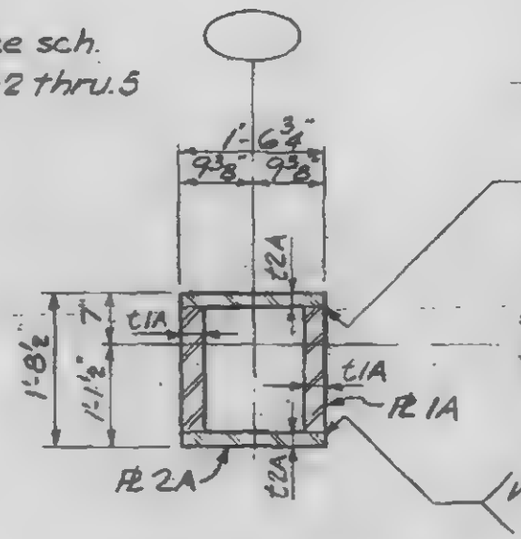

Section c-c

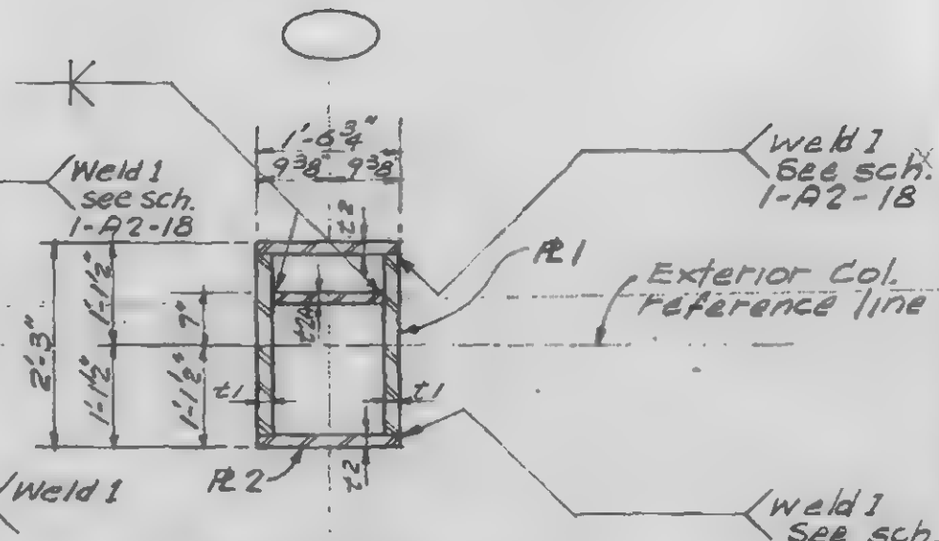

Section d-d

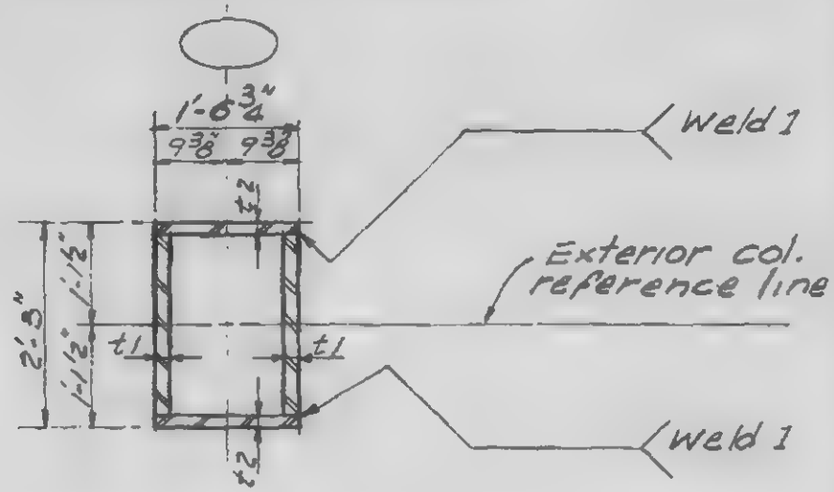

Section e-e

LICENSED PROFESSIONAL ENGINEER
LESLIE E. ROBERTSON
No. 34360
UNIVERSITY OF THE STATE OF NEW YORK

1-A2-20

WORTHINGTON, SKILLING, HELLE & JACKSON — Civil & Structural Engineers

PROJECT THE WORLD TRADE CENTER | TITLE Ext. WALL TO EL 363'- COLUMN TYPE 8000 | DATE 2-17-67

REVISIONS
3-15-67
4-24-67

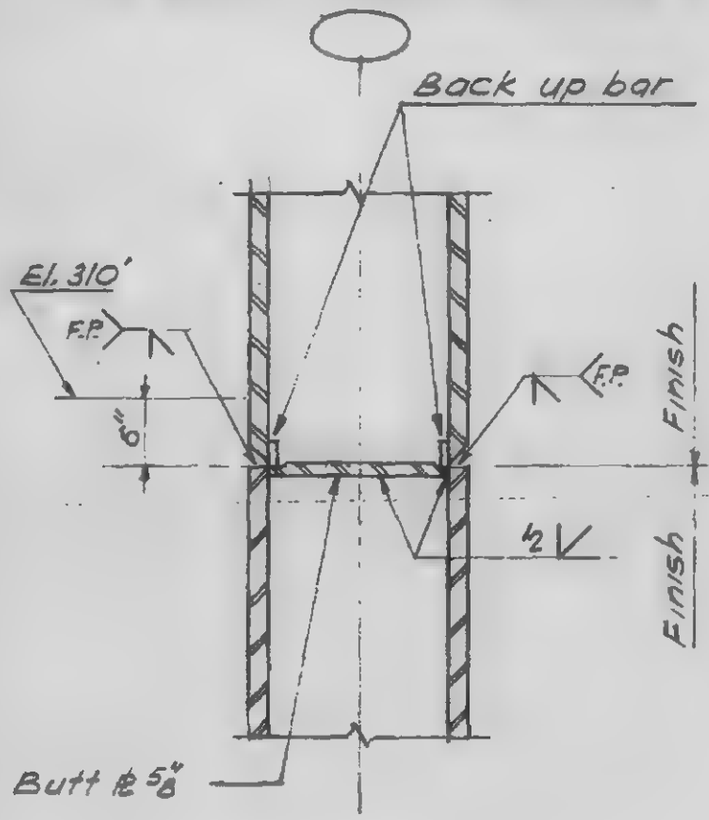

Section a-a

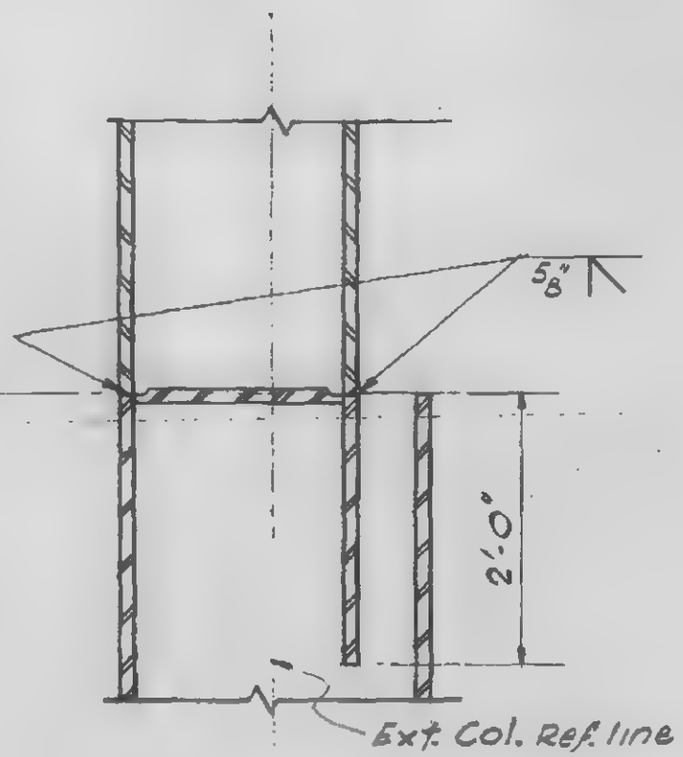

Section b-b

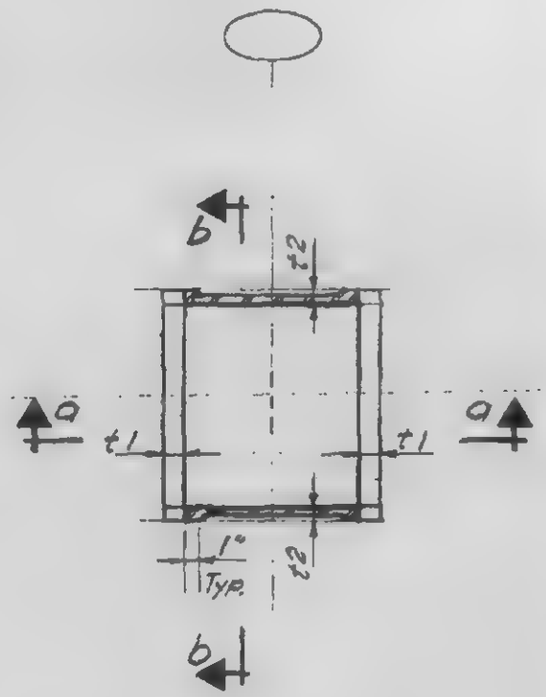

Plan
Weld preparation

SPLICE DETAIL

REGISTERED PROFESSIONAL ENGINEER
LESLIE E. ROBERTSON
34300
UNIVERSITY OF THE STATE OF NEW YORK

1-A2-21

WORTHINGTON, SKILLING, HELLE & JACKSON — Civil & Structural Engineers

PROJECT THE WORLD TRADE CENTER | TITLE EXT. WALL TO EL. 363' - COLUMN TYPE 2000 | DATE 2-17-67

REVISIONS

3-15-67
4-24-67

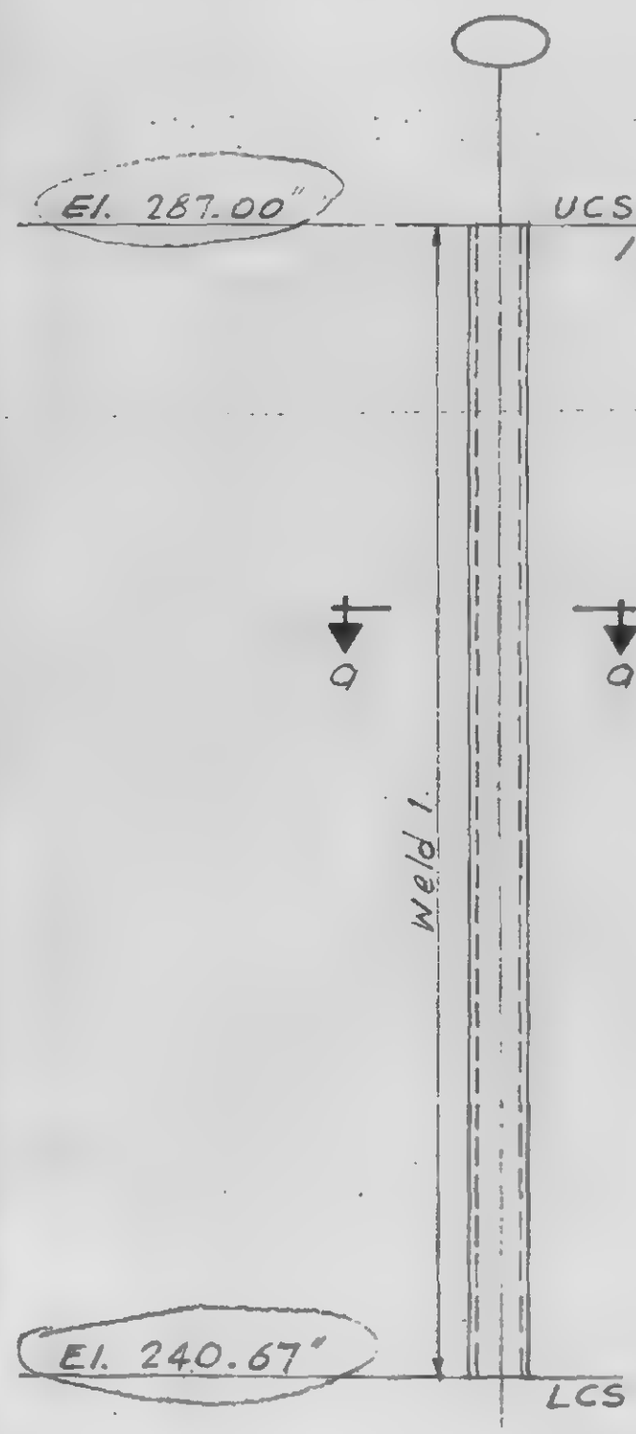

Elevation

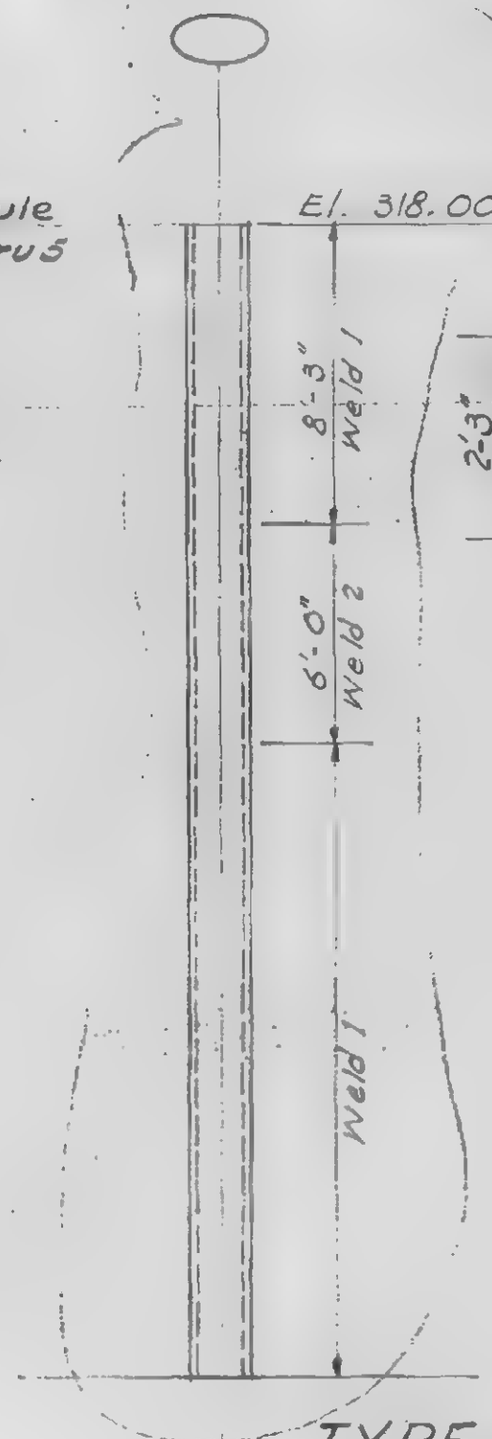

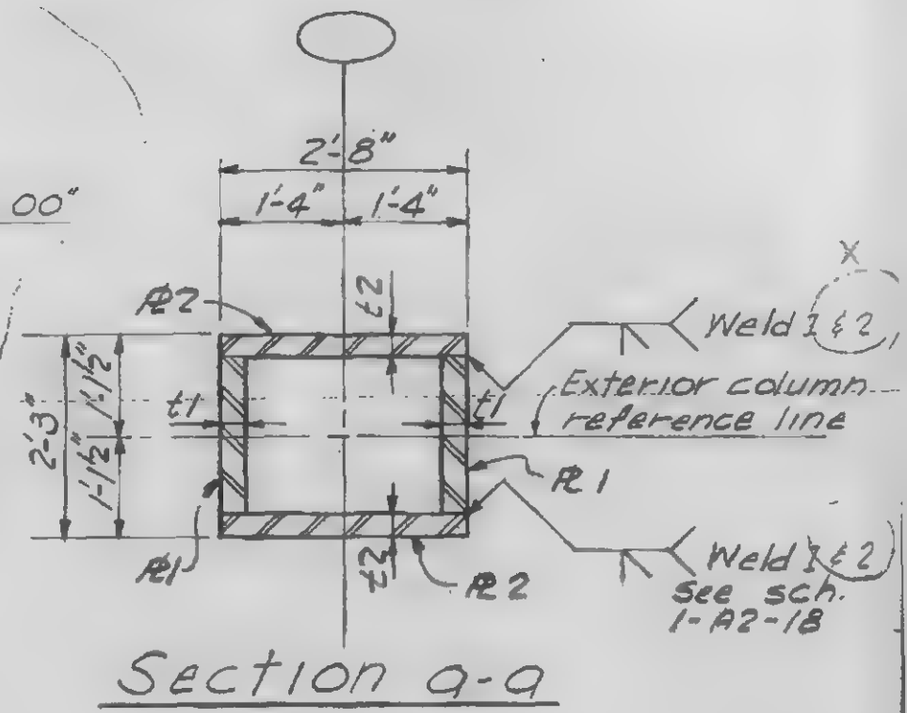

Section a-a

TYPE 2004 thru 2021

LICENSED PROFESSIONAL ENGINEER
LESLIE E. ROBERTSON
No. 34360
UNIVERSITY OF THE STATE OF NEW YORK

1-A2-22

SKILLING-HELLE-CHRISTIANSEN-ROBERTSON — **Civil & Structural Engineers**

PROJECT: THE WORLD TRADE CENTER | TITLE: EXTERIOR WALL TO EL.363 - COLUMN TYPE 5000, 6000, 7000 | DATE: 2-17-67

REVISIONS
4-24-67
2-15-68

COLUMN TYPE	PLATE 1 T1	PLATE 2 T2	PLATE 5 T5	PLATE 6 T6	PLATE 7 T7	PLATE 8 T8	PLATE 9 T9	PLATE 10 T10	WELD 1	WELD 2
5001	1-7/16	5/8	2-1/4	2-1/2	2-1/2	2	2	1-3/4	5/8	1
5003	1-3/4	5/8	2-1/4	2-1/2	2-1/2	2	2	1-5/8	5/8	1
6004	2-1/4	1	2-1/4	2-1/2	2-1/2	2	2	1-1/2	5/8	1-1/8
6009	3-3/8	1-1/2	2-1/4	2-1/2	2-1/2	2	2	1-3/8	11/16	1-1/4
7005	2-3/8	1	2-1/4	2-1/2	2-1/2	2	2	1-1/2	5/8	1-1/8
7006	2-5/8	1-1/8	2-1/4	2-1/2	2-1/2	2	2	1-1/2	5/8	1-1/4
7007	3-1/4	1-3/8	2-1/4	2-1/2	2-1/2	2	2	1-3/8	5/8	1-3/8
7008	3-3/8	1-3/8	2-1/4	2-1/2	2-1/2	2	2	1-3/8	5/8	1-3/8
7010	3-1/2	1-1/2	2-1/4	2-1/2	2-1/2	2	2	1-3/8	11/16	1-3/8
7011	3-5/8	1-1/2	2-1/4	2-1/2	2-1/2	2	2	1-1/4	11/16	1-3/8
7013	4-1/4	1-7/8	2-1/4	2-1/2	2-1/2	2	2	1-1/4	3/4	1-3/8
7016	4-3/4	2-1/4	2-1/4	2-1/2	2-1/2	2	2	1-1/4	3/4	1-1/2
7217	5	2-3/4	2-3/4	2	2	2	2	1-1/4	7/8	1-1/2
7318	5	2-7/8	2-7/8	1-7/8	1-7/8	2	2	1-1/4	7/8	1-1/2
7419	5	3	3	1-3/4	1-3/4	2	2	1-1/4	7/8	1-1/2
5022	1-1/2	11/16	2-1/4	2-1/2	2-1/2	2	2	1-3/4	5/8	1
5023	1-5/8	3/4	2-1/4	2-1/2	2-1/2	2	2	1-3/4	5/8	1
5024	1-5/8	11/16	2-1/4	2-1/2	2-1/2	2	2	1-3/4	5/8	1
6025	2-3/8	1-1/16	2-1/4	2-1/2	2-1/2	2	2	1-1/2	5/8	1-1/8
7026	2-1/2	1-1/16	2-1/4	2-1/2	2-1/2	2	2	1-1/2	5/8	1-1/8
7027	2-3/4	1-3/16	2-1/4	2-1/2	2-1/2	2	2	1-1/2	5/8	1-1/4
7028	3-1/2	1-7/16	2-1/4	2-1/2	2-1/2	2	2	1-3/8	11/16	1-3/8

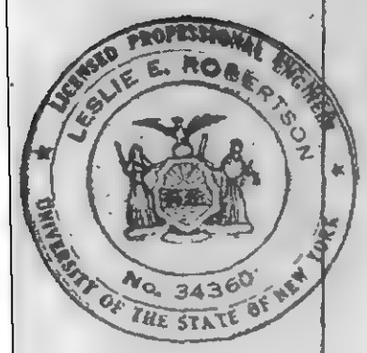

WORTHINGTON, SKILLING, HELLE & JACKSON — Civil & Structural Engineers

PROJECT: THE WORLD TRADE CENTER | TITLE: EXT. WALL TO EL. 363 - COLUMN TYPE 5000 | DATE: 2-17-67

REVISIONS
3-15-67

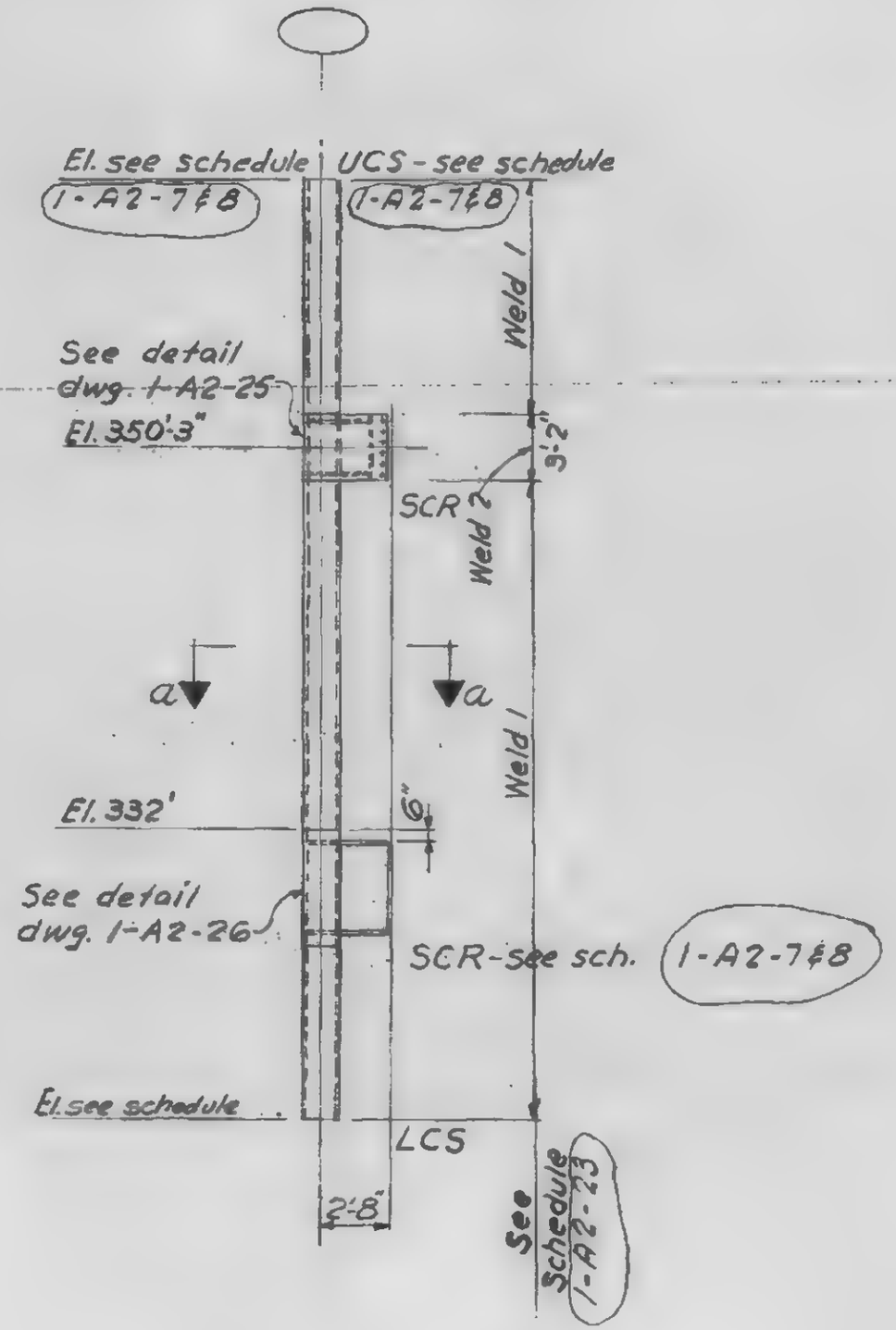

Elevation

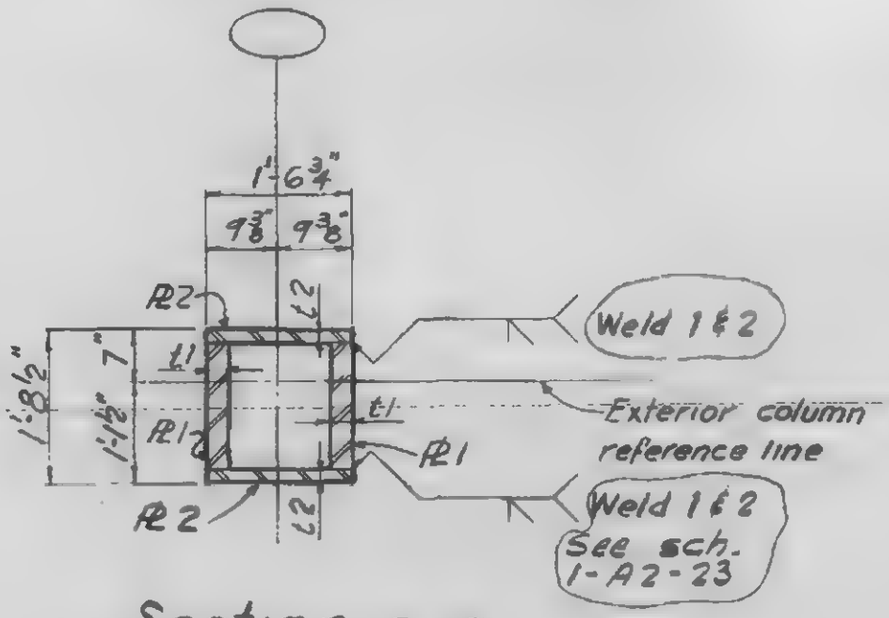

Section a-a

COLUMN TYPE 5001 & 5003

LICENSED PROFESSIONAL ENGINEER
LESLIE E. ROBERTSON
No. 34360
UNIVERSITY OF THE STATE OF NEW YORK

1-A2-24

WORTHINGTON, SKILLING, HELLE & JACKSON — Civil & Structural Engineers

PROJECT THE WORLD TRADE CENTER | TITLE EXT. WALL TO EL. 363-COLUMN TYPE 5000 | DATE 2-17-67

REVISIONS

3-15-67

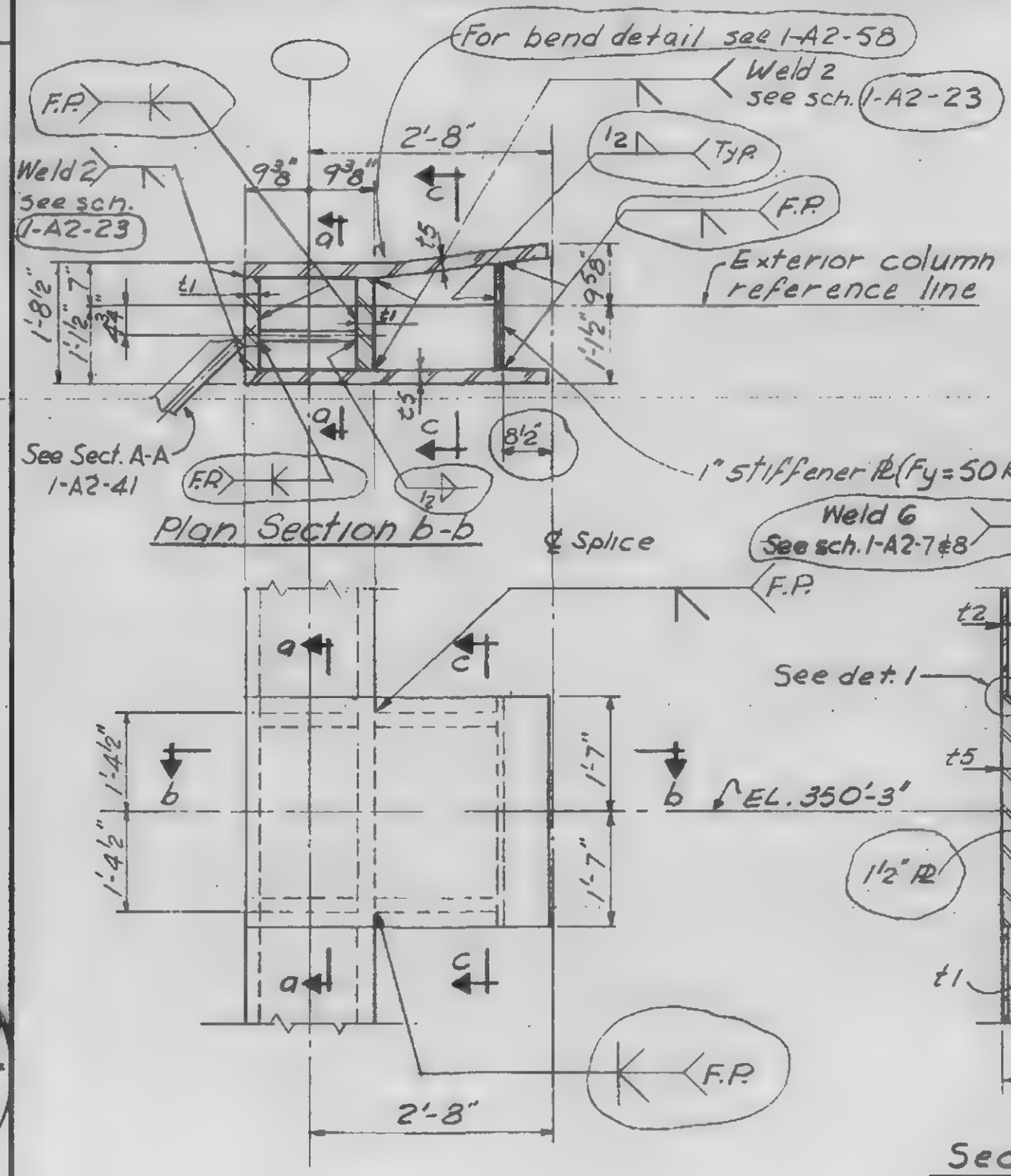

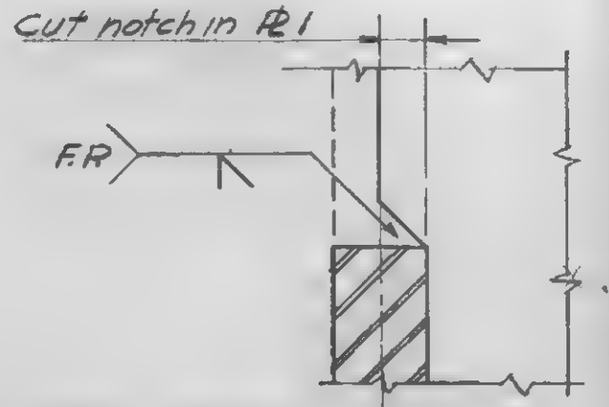

Detail 1

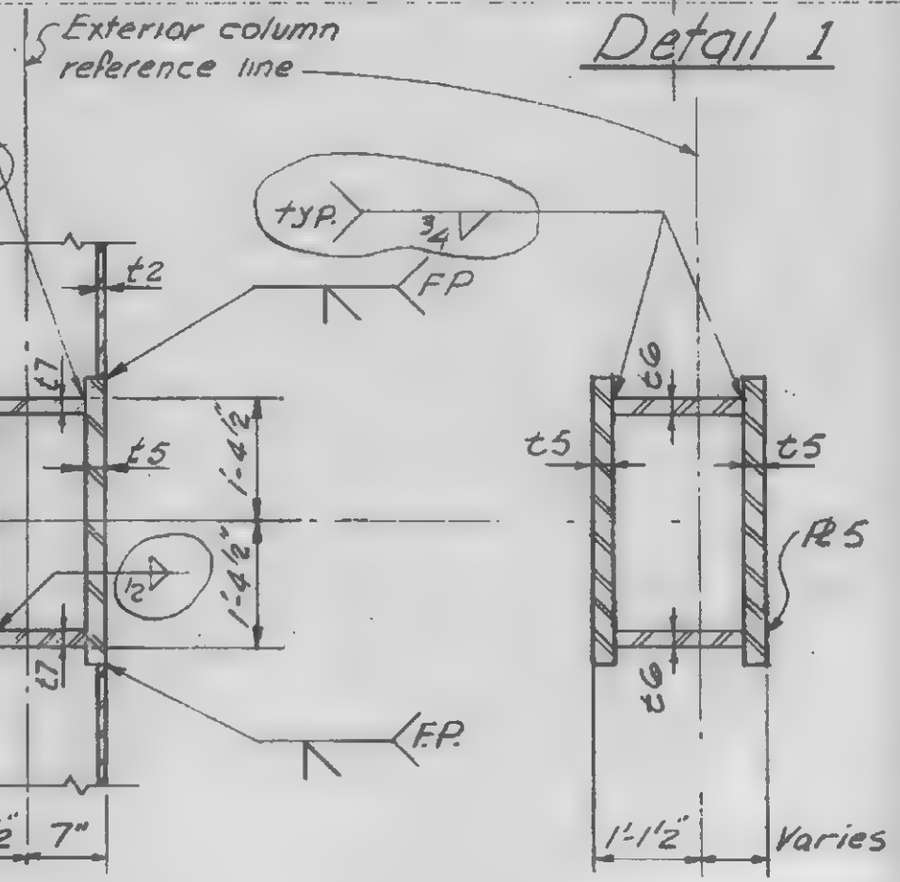

Section a-a

Section c-c

Note: Column PL 1 material shall be free of laminations within 2'-2" of the ℄ of the spandrel.

SPANDREL AT EL. 350 DETAILS

1-A2-25

LICENSED PROFESSIONAL ENGINEER
LESLIE E. ROBERTSON
No. 34360
UNIVERSITY OF THE STATE OF N.Y.

WORTHINGTON, SKILLING, HELLE & JACKSON — Civil & Structural Engineers

PROJECT: THE WORLD TRADE CENTER | TITLE: EXT. WALL TO EL. 363 - COLUMN TYPE 5000 | DATE: 2-17-67

REVISIONS

3-15-67

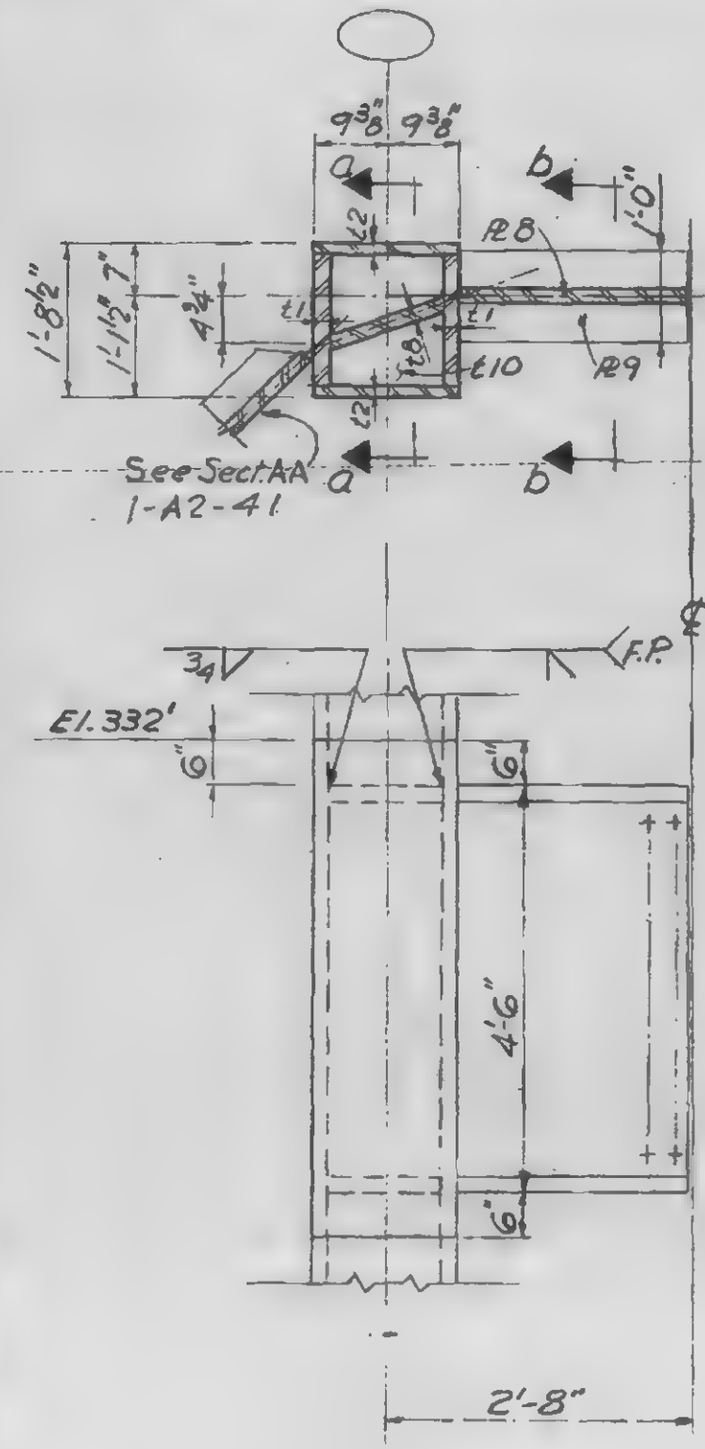

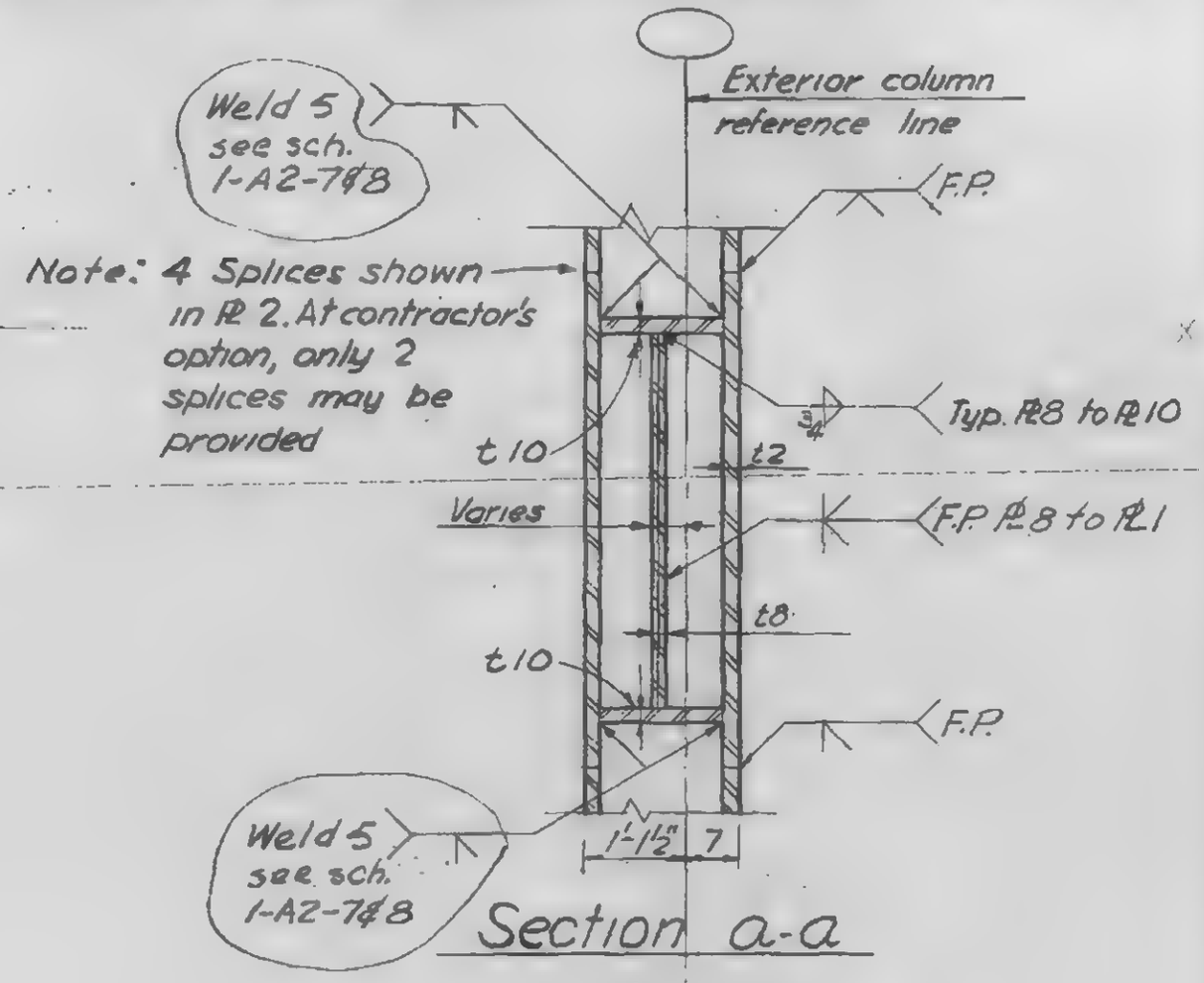

Section a-a

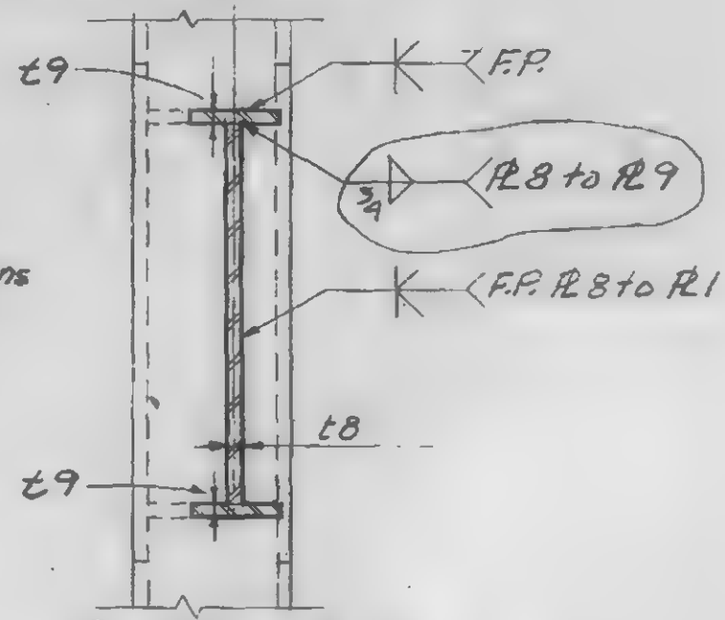

Section b-b

Note: 4 Splices shown in R2. At contractor's option, only 2 splices may be provided

NOTE
Column R1 material shall be free of laminations within 2'-9" of the ℄ of the spandrel

SPANDREL AT EL. 332 DETAILS

1-A2-26

LICENSED PROFESSIONAL ENGINEER — LESLIE E. ROBERTSON — No. 34360 — UNIVERSITY OF THE STATE OF NEW YORK

WORTHINGTON, SKILLING, HELLE & JACKSON — Civil & Structural Engineers

PROJECT THE WORLD TRADE CENTER | TITLE EXT. WALL TO EL. 363' - COLUMN TYPE 6000 | DATE 2-17-67

REVISIONS

3-15-67

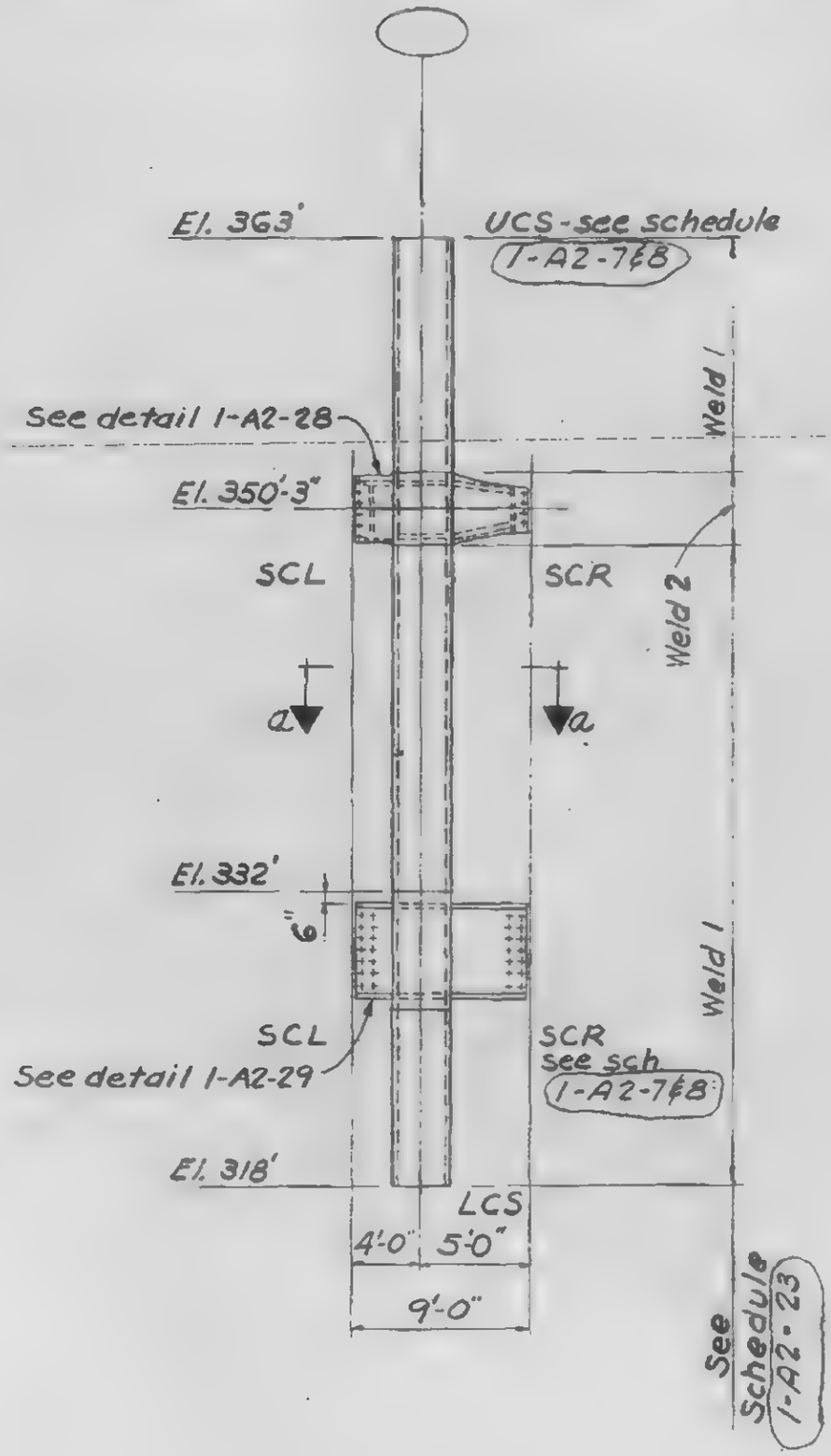

Elevation

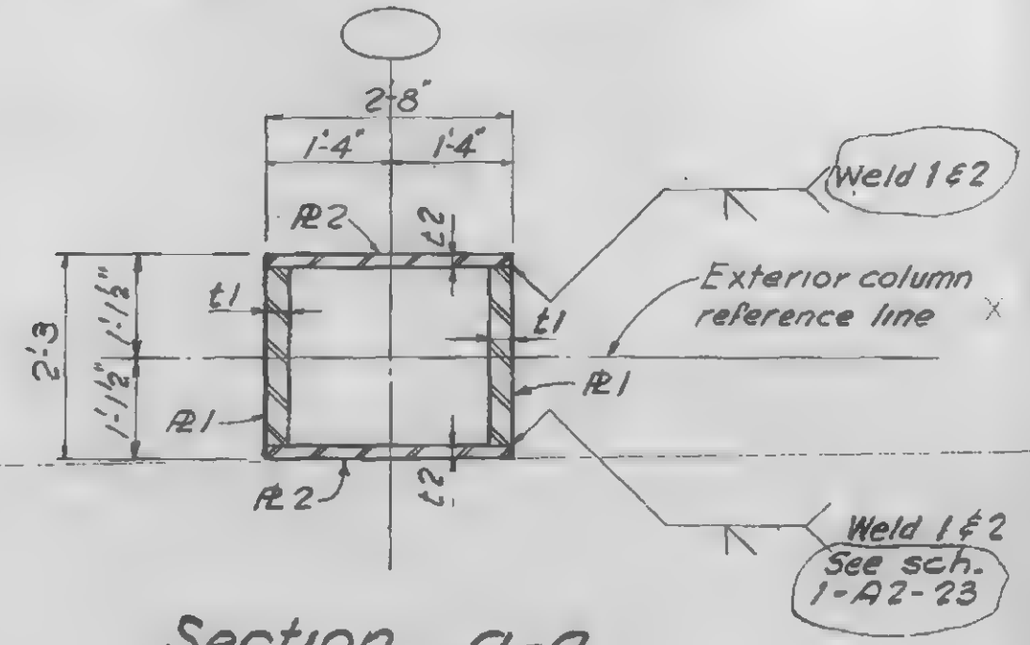

Section a-a

COLUMN TYPES 6004 & 6009

LICENSED PROFESSIONAL ENGINEER
LESLIE E. ROBERTSON
No. 34360
UNIVERSITY OF THE STATE OF NEW YORK

1-A2-27

WORTHINGTON, SKILLING, HELLE & JACKSON — Civil & Structural Engineers

PROJECT: THE WORLD TRADE CENTER | TITLE: EXT. WALL TO EL.363' - COLUMN TYPE 6000 | DATE: 2-17-67

REVISIONS

3-15-67

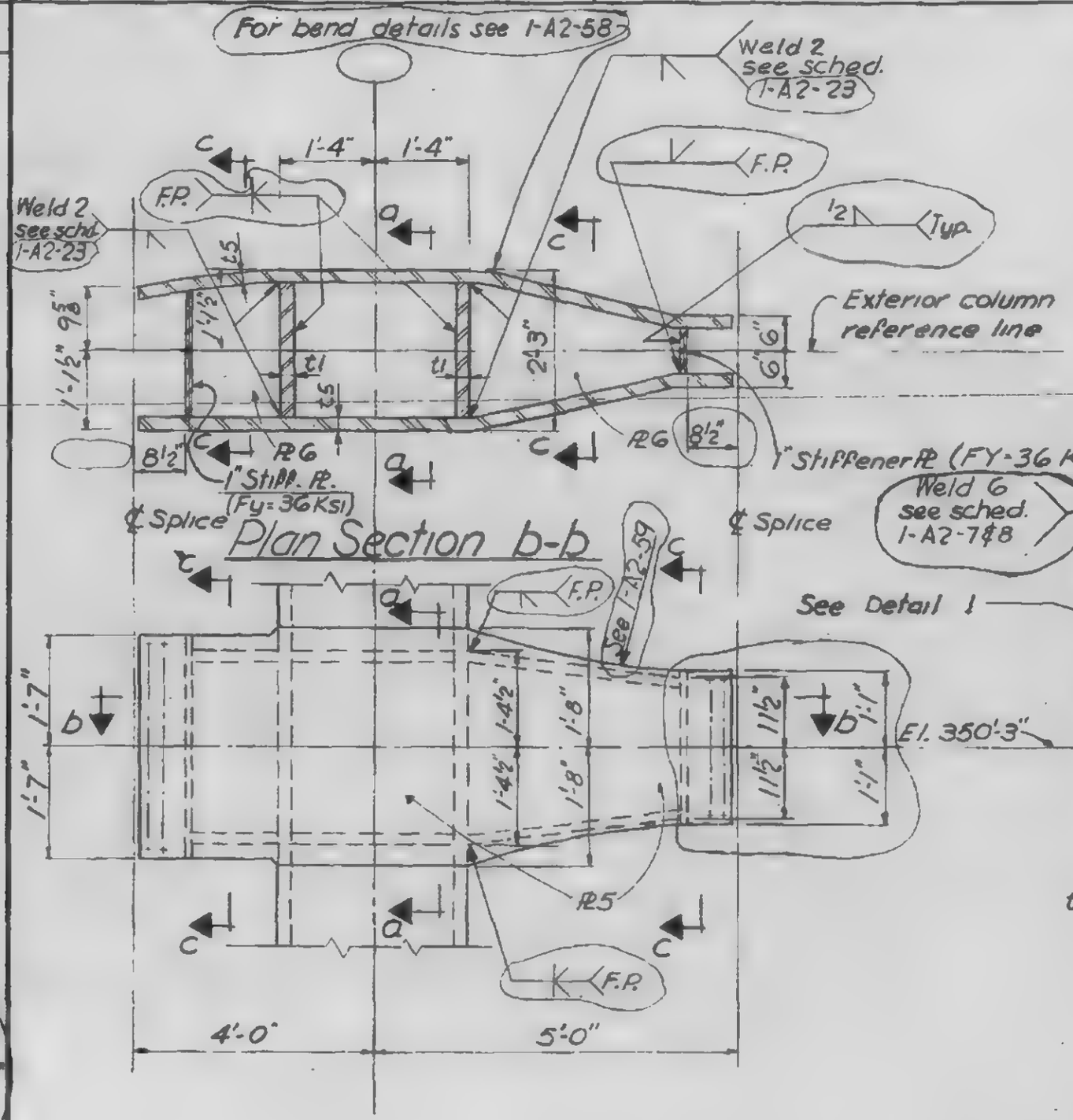

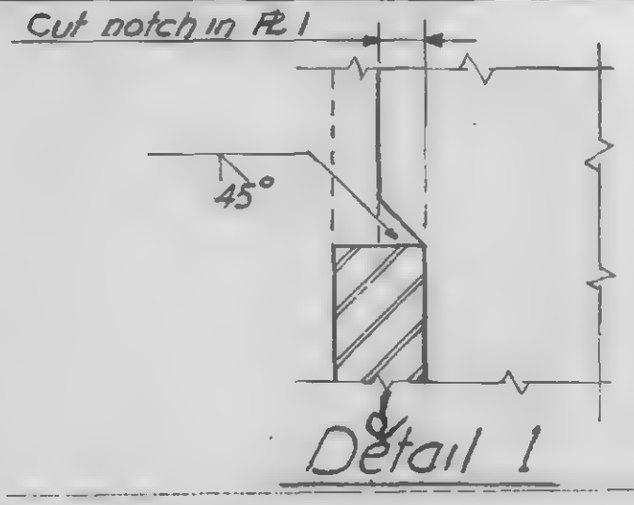

Detail 1

Section a-a

Section c-c

Note: Column Pl 1 material shall be free of laminations within 2'-2" of the ℄ of the spandrel.

SPANDREL AT EL.350' DETAILS

1-A2-28

LICENSED PROFESSIONAL ENGINEER
LESLIE E. ROBERTSON
No. 34360
UNIVERSITY OF THE STATE OF NEW YORK

WORTHINGTON, SKILLING, HELLE & JACKSON — Civil & Structural Engineers

PROJECT: THE WORLD TRADE CENTER | TITLE: EXT. WALL TO EL. 363' - COLUMN TYPE 6000 | DATE: 2-17-67

REVISIONS

3-15-67

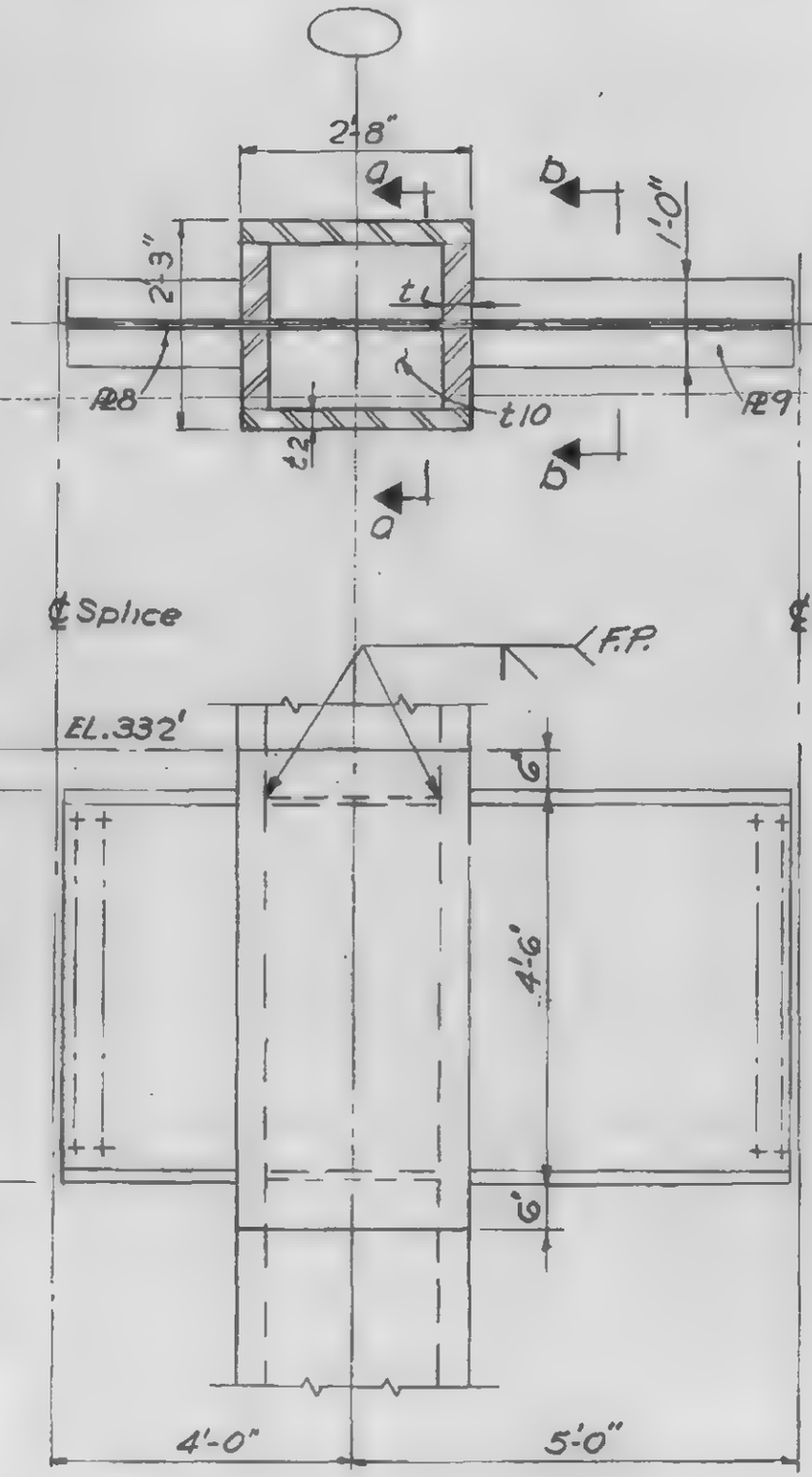

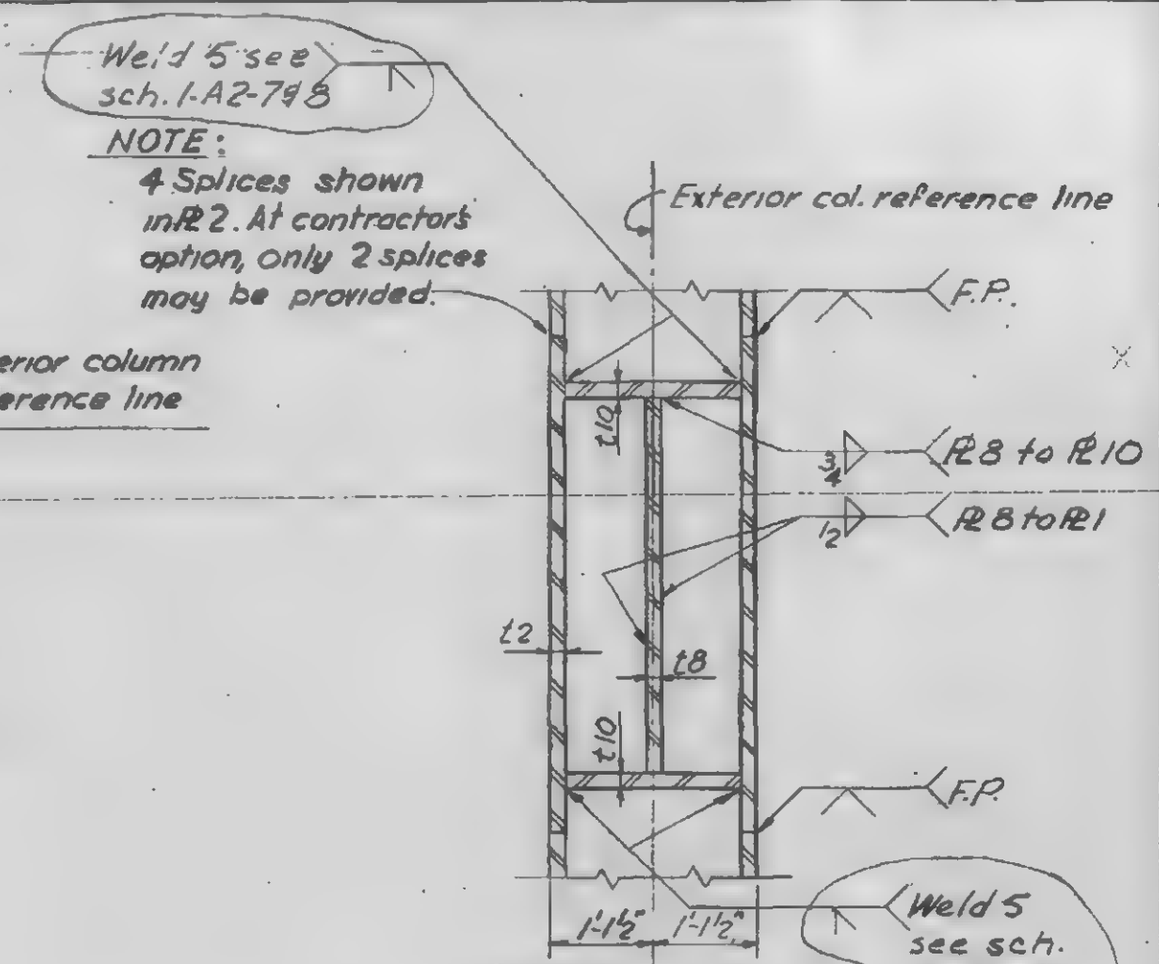

NOTE:
4 Splices shown in PL2. At contractor's option, only 2 splices may be provided.

Section a-a

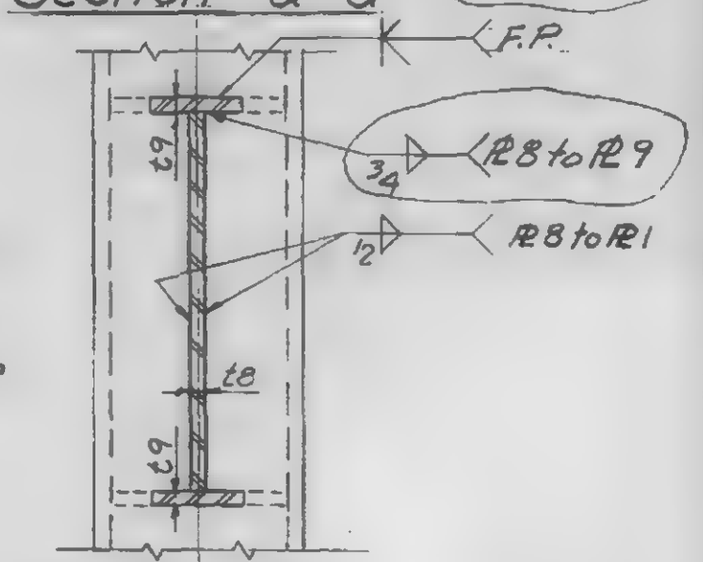

Section b-b

NOTE:
Column PL 1 material shall be free of laminations within 2'-9" of the ℄ of the spandrel.

SPANDREL AT EL. 332' DETAILS

1-A2-29

LICENSED PROFESSIONAL ENGINEER — LESLIE E. ROBERTSON — No. 34360 — UNIVERSITY OF THE STATE OF NEW YORK

WORTHINGTON, SKILLING, HELLE & JACKSON — Civil & Structural Engineers

PROJECT THE WORLD TRADE CENTER | TITLE EXT. WALL TO EL. 363 COLUMN TYPE 7000 | DATE 2-17-67

REVISIONS

3-15-67

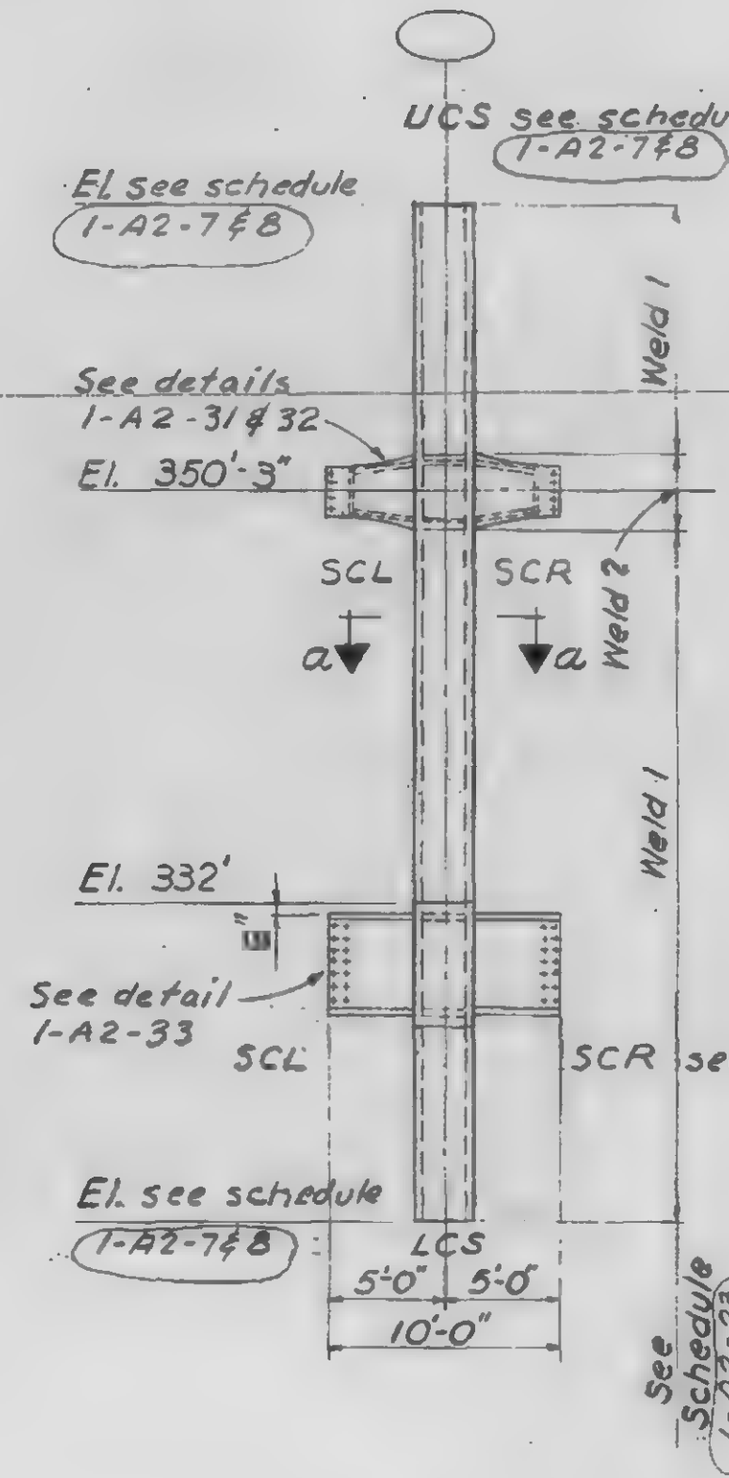

Elevation

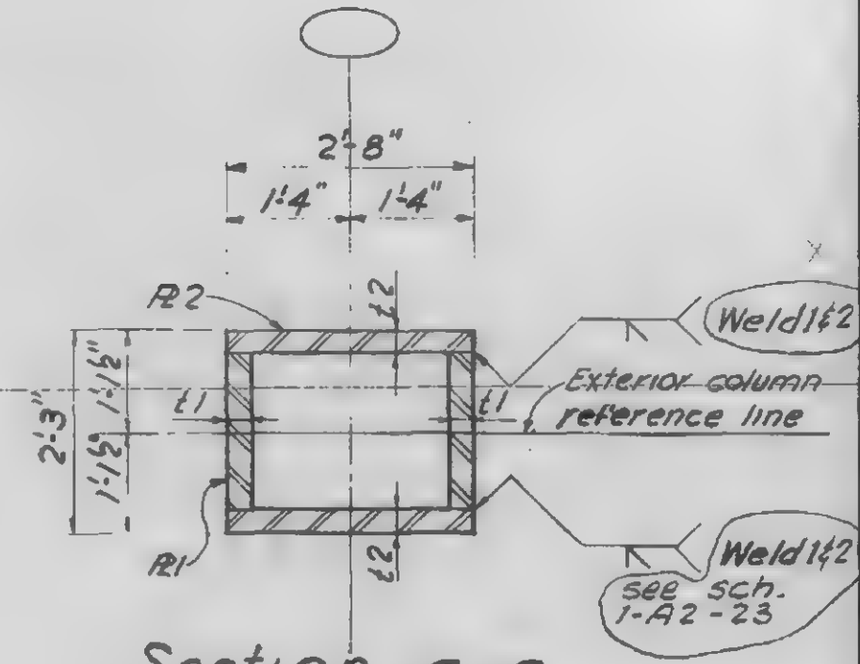

Section a-a

COLUMN TYPES 7005 THRU 7419

1-A2-30

LICENSED PROFESSIONAL ENGINEER
LESLIE E. ROBERTSON
No. 34360
UNIVERSITY OF THE STATE OF NE. YORK

WORTHINGTON, SKILLING, HELLE & JACKSON — Civil & Structural Engineers

PROJECT: THE WORLD TRADE CENTER | TITLE: EXT. WALL TO EL. 363-COLUMN TYPE 7000 | DATE: 2-17-67

REVISIONS

3-15-67
4-24-67

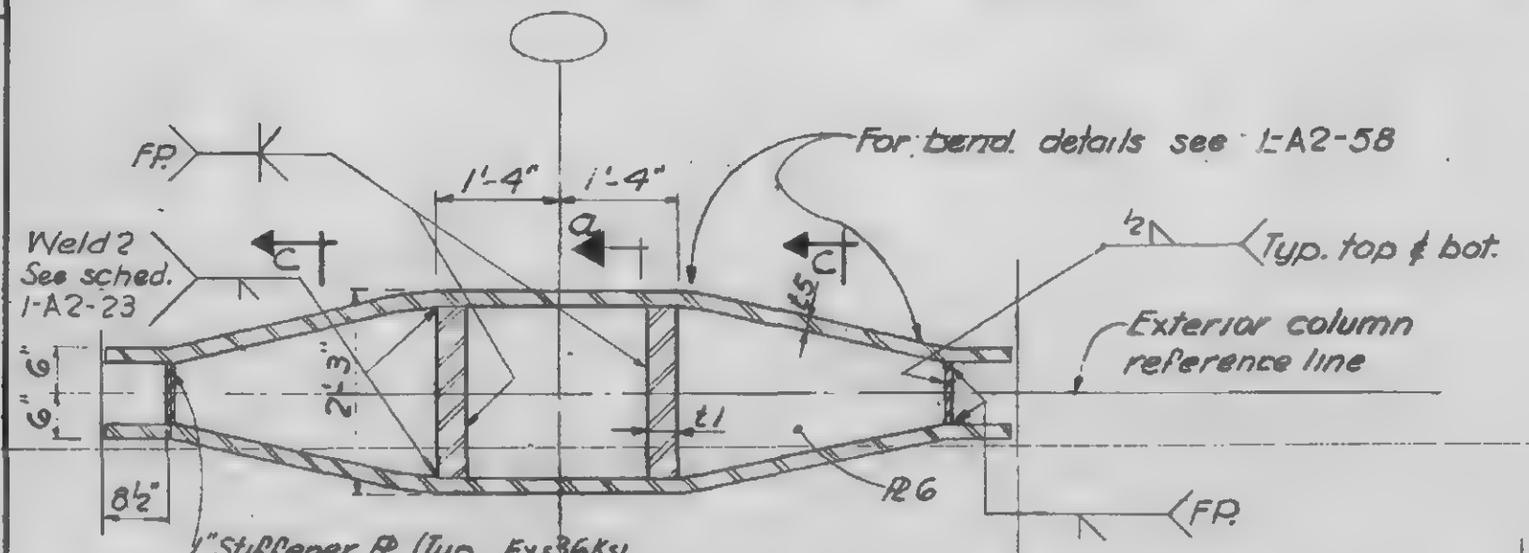

℄ Splice — ℄ Splice

Plan Section b-b

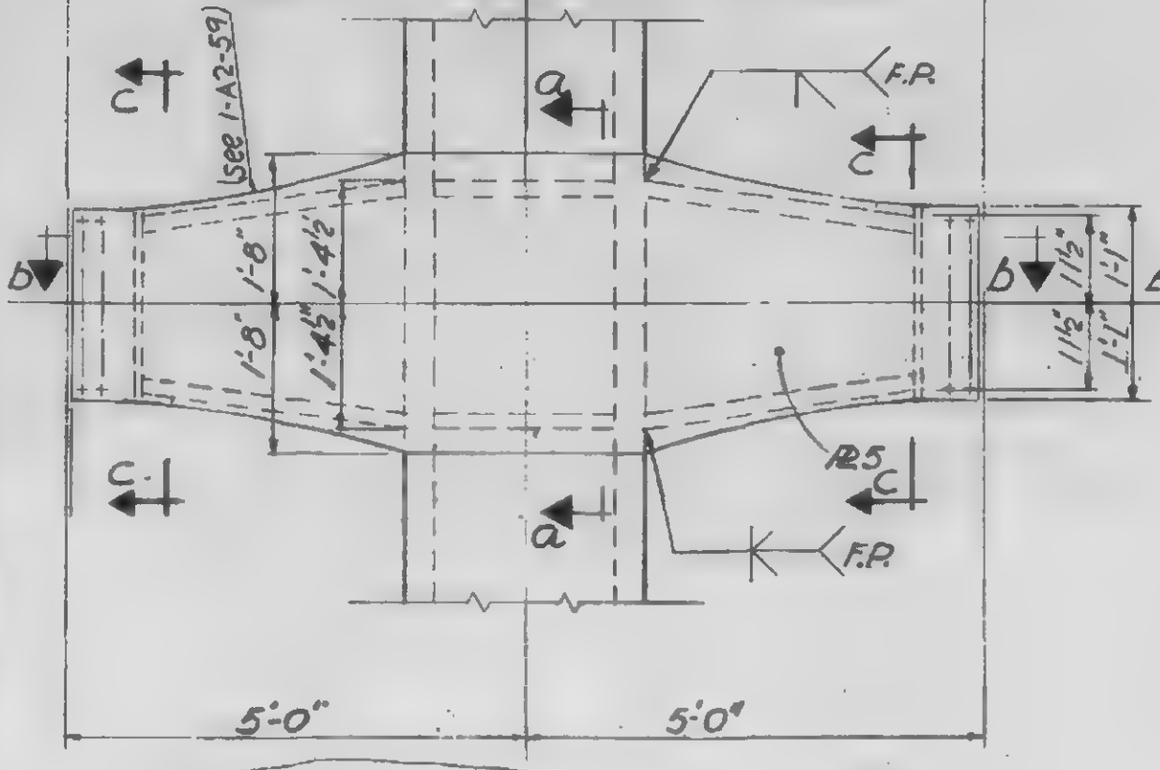

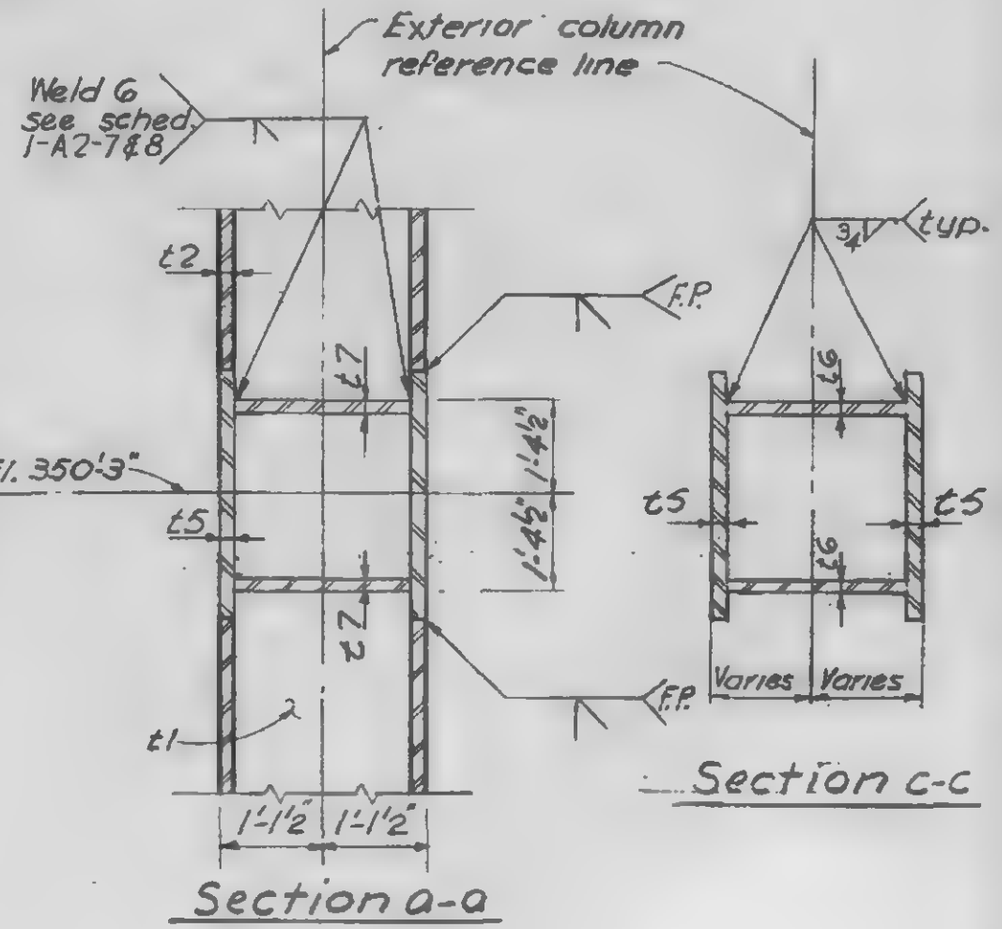

Section c-c

Section a-a

Note:
Column Pl 1 material shall be free of laminations within 2'-2" of the ℄ of the spandrel.

SPANDREL AT EL. 350 DETAILS
COLUMN TYPE 7016, 7217, 7318, 7419

1-A2-31

LICENSED PROFESSIONAL ENGINEER — LESLIE E. ROBERTSON — No. 34360 — STATE OF ILLINOIS

WORTHINGTON, SKILLING, HELLE & JACKSON — Civil & Structural Engineers

PROJECT: THE WORLD TRADE CENTER | TITLE: EXT. WALL TO EL. 363 COLUMN TYPE 7000 | DATE: 2-17-67

REVISIONS

3-15-67
4-24-67

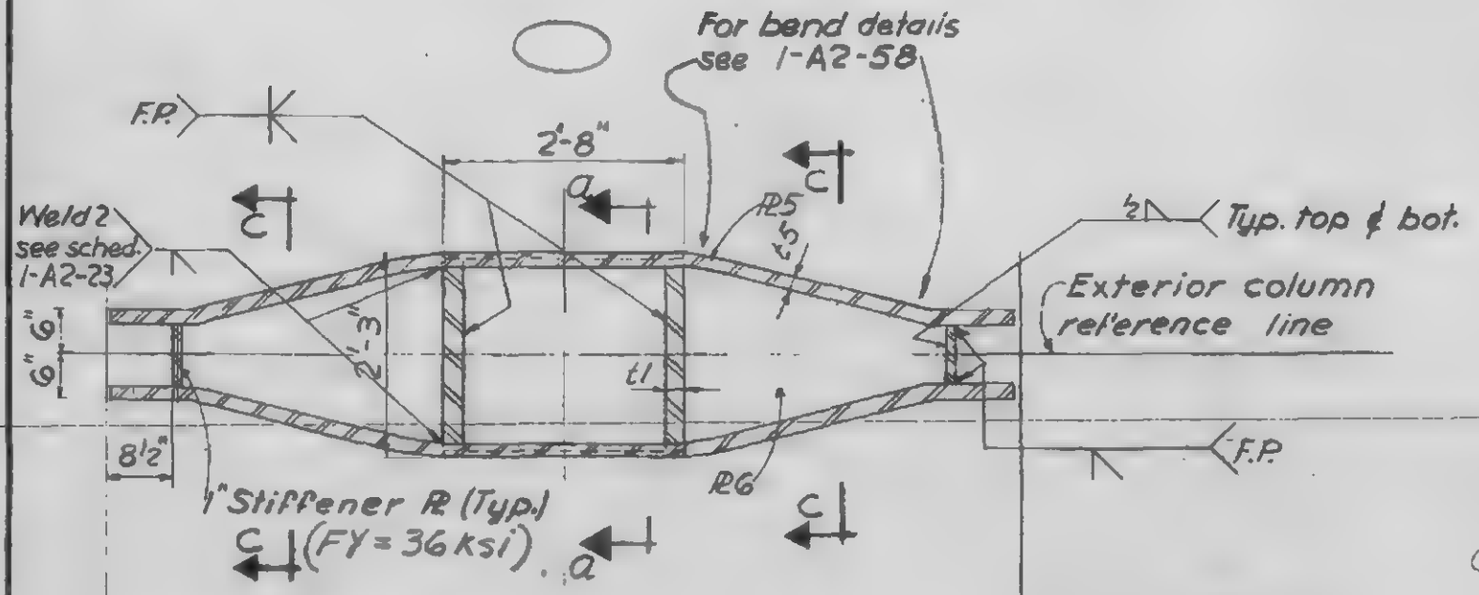

¢ Splice — Plan Section b-b

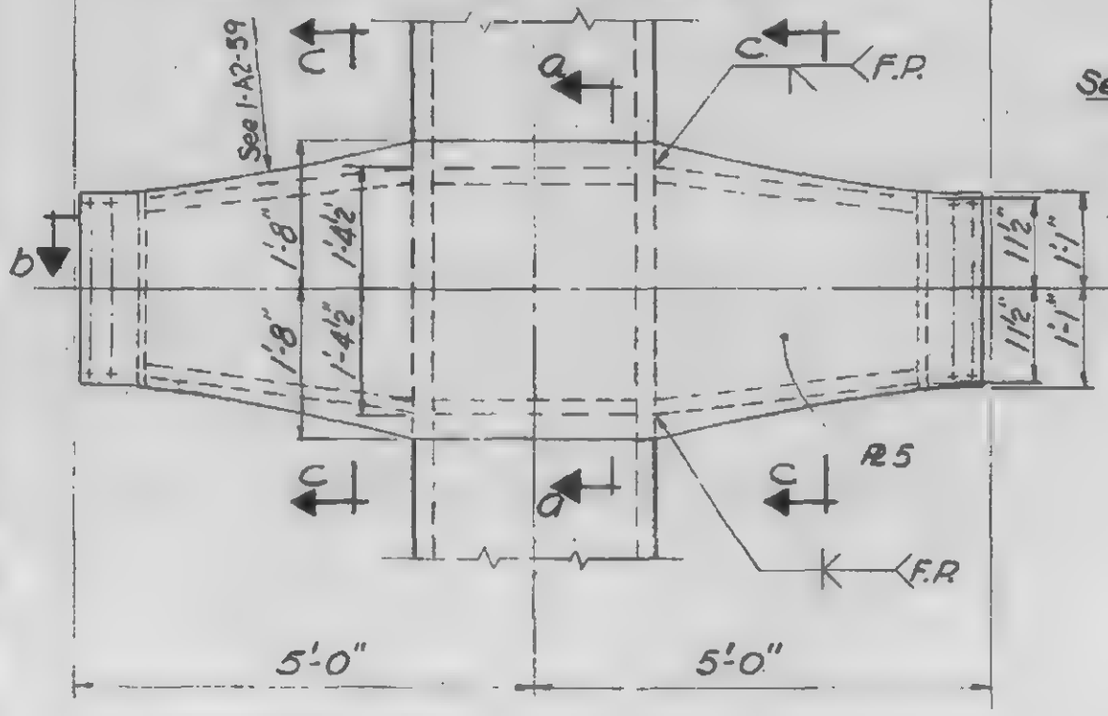

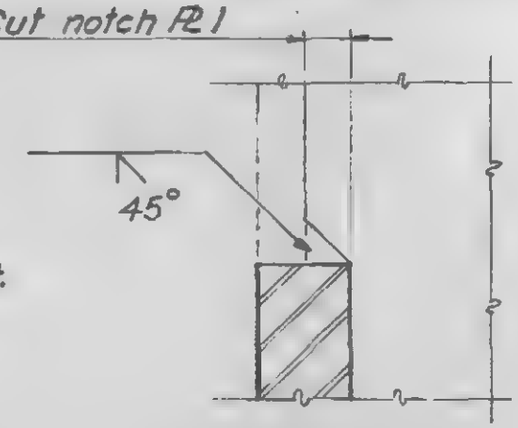

Detail 1

¢ Splice

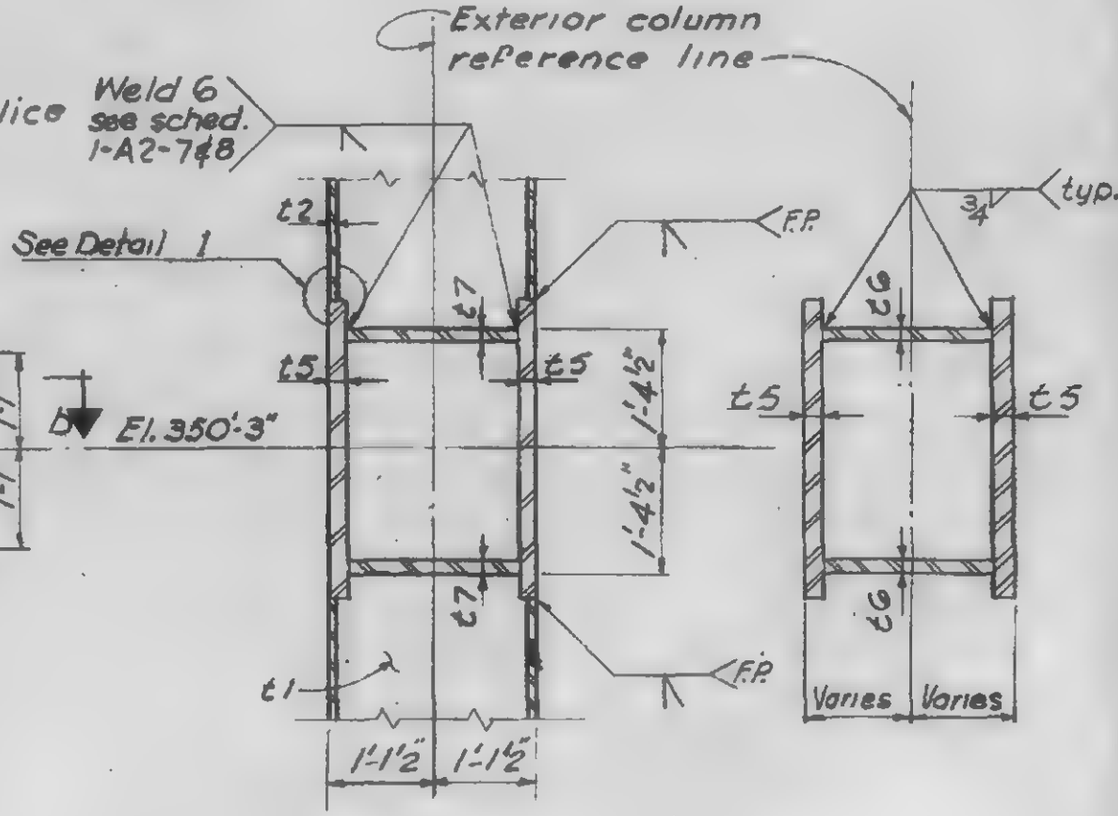

Section a-a

Section c-c

Note:
Column PL 1 material shall be free of laminations within 2'-2" of the ¢ of the spandrel.

SPANDREL AT EL. 350' DETAILS
COLUMN TYPE 7005 THRU 7013 INCL.

1-A2-32

LICENSED PROFESSIONAL ENGINEER
LESLIE E. ROBERTSON
No. 34360
UNIVERSITY OF THE STATE OF NEW YORK

WORTHINGTON, SKILLING, HELLE & JACKSON — Civil & Structural Engineers

PROJECT: THE WORLD TRADE CENTER | TITLE: EXT. WALL TO EL. 363 - COLUMN TYPE 7000 | DATE: 2-17-67

REVISIONS

3-15-67

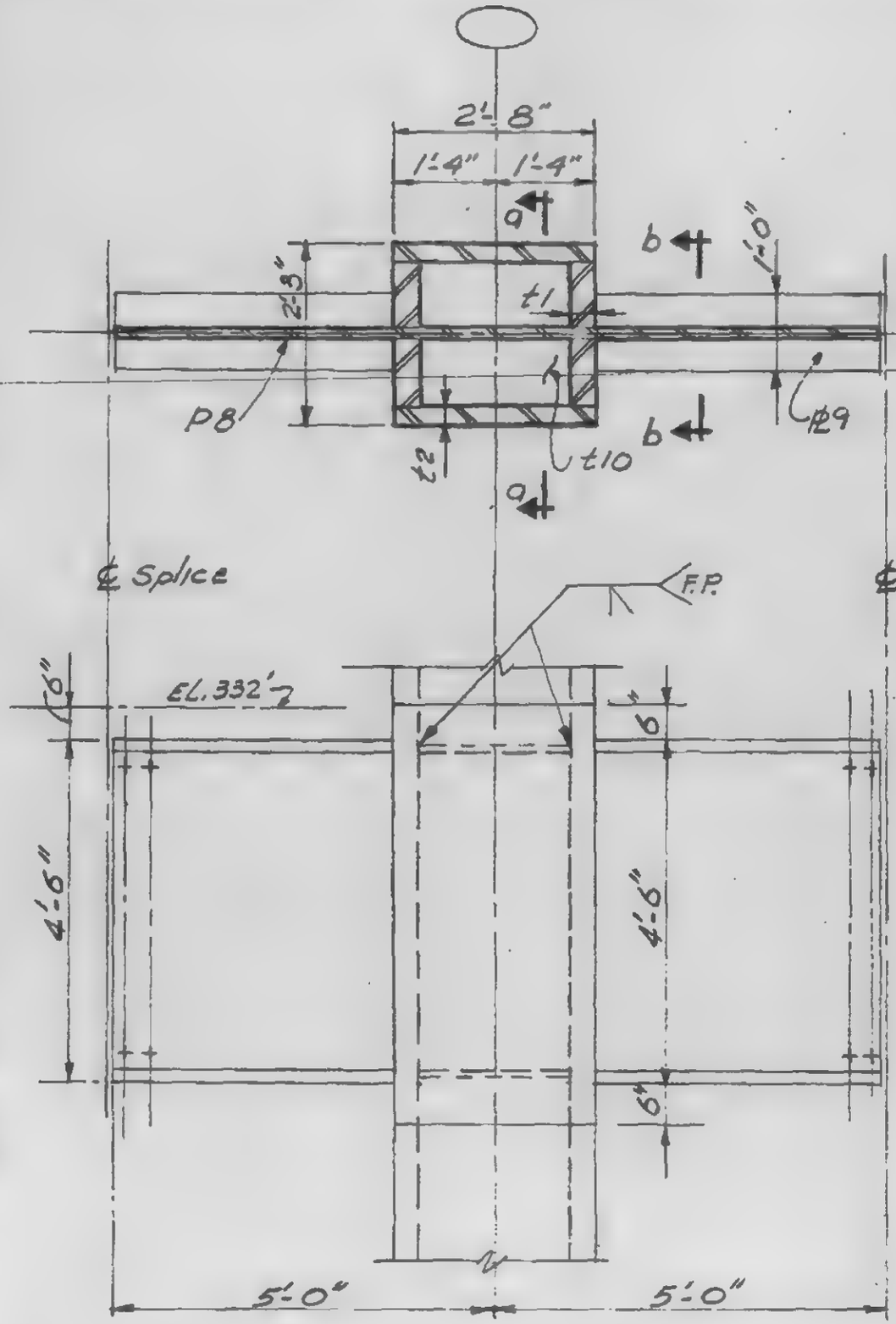

Note: 4 Splices shown in P2. at contractor's option, only 2 splices may be provided.

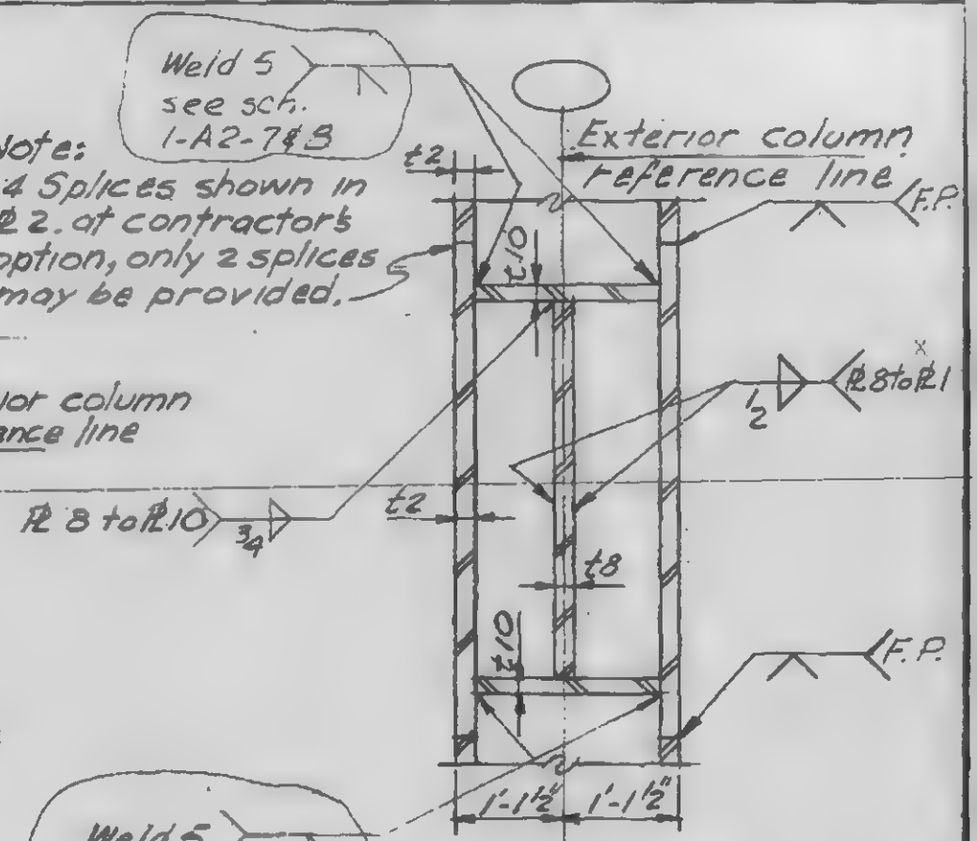

Section a-a

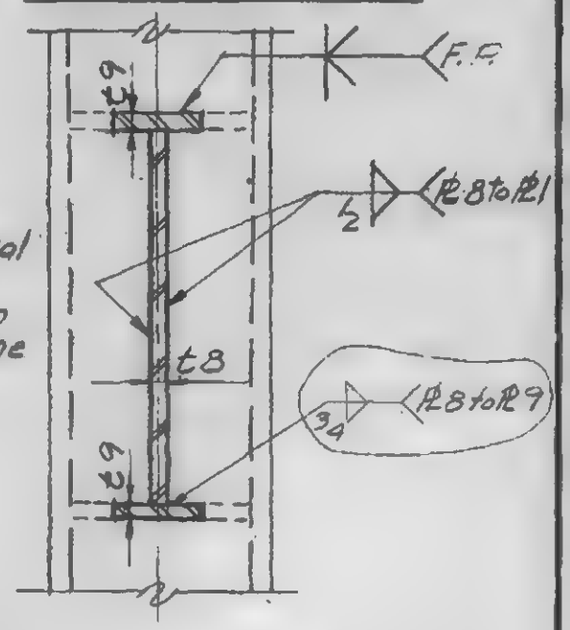

NOTE: Column P1 material shall be free of laminations with in 2'-9" of the ℄ of the spandrel.

Section b-b

SPANDREL AT EL. 332 DETAILS

1-A2-33

LICENSED PROFESSIONAL ENGINEER
LESLIE E. ROBERTSON
No. 34360
UNIVERSITY OF THE STATE OF NEW YORK

WORTHINGTON, SKILLING, HELLE & JACKSON — Civil & Structural Engineers

PROJECT: THE WORLD TRADE CENTER | TITLE: EXT. WALL TO EL. 363 - COL. SPLICE DET. 101 | DATE: 2-17-67

REVISIONS

3-15-67

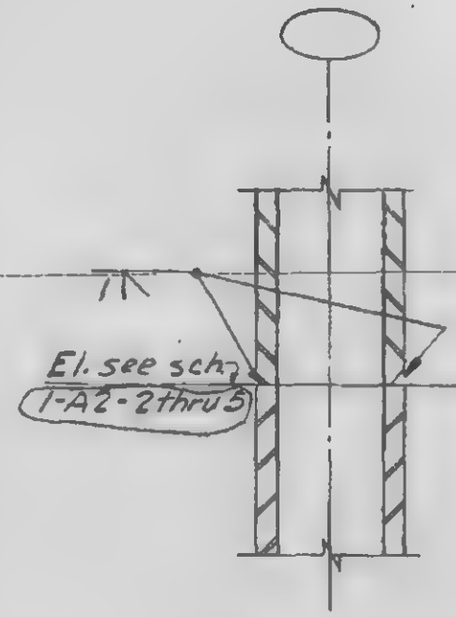

Section a-a

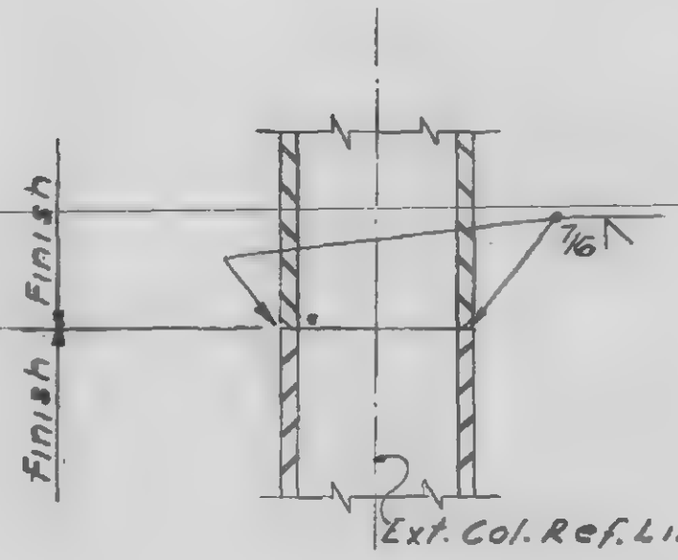

Section b-b

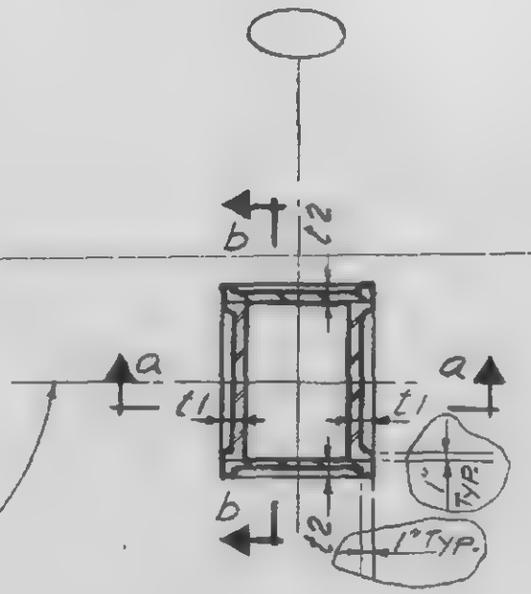

PLAN
weld - preparation

LICENSED PROFESSIONAL ENGINEER
LESLIE E. ROBERTSON
No. 34360
UNIVERSITY OF THE STATE OF NEW YORK

1-A2,-34

WORTHINGTON, SKILLING, HELLE & JACKSON — Civil & Structural Engineers

PROJECT THE WORLD TRADE CENTER | TITLE EXT. WALL TO EL. 363 - COL. SPLICE DETS. 200 | DATE 2-17-67

REVISIONS

3-15-67

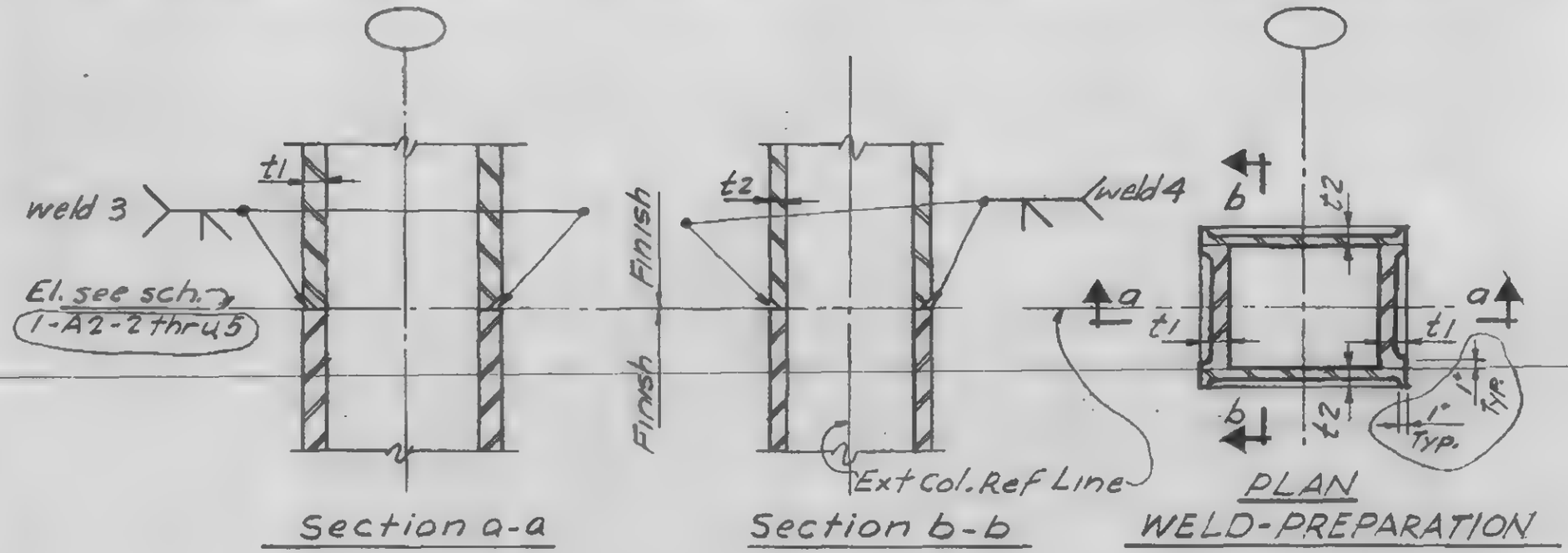

Section a-a

Section b-b

PLAN
WELD-PREPARATION

Splice detail	Weld #3	Weld #4
201	1 1/8	3/4
202	1 1/4	3/4
203	1 3/8	3/4
204	1 3/8	1
205	1 1/2	1
206	1 5/8	1 1/8
207	1 5/8	1 1/4
208	1 3/4	1 1/4
209	2	1 1/2

LICENSED PROFESSIONAL ENGINEER
LESLIE E. ROBERTSON
No. 34360
UNIVERSITY OF THE STATE OF NEW YORK

1-A2-35

WORTHINGTON, SKILLING, HELLE & JACKSON — Civil & Structural Engineers

PROJECT: THE WORLD TRADE CENTER | TITLE: EXT. WALL TO EL. 363 - COL. SPLICE DET. 501 | DATE: 2-17-67

REVISIONS

3-15-67

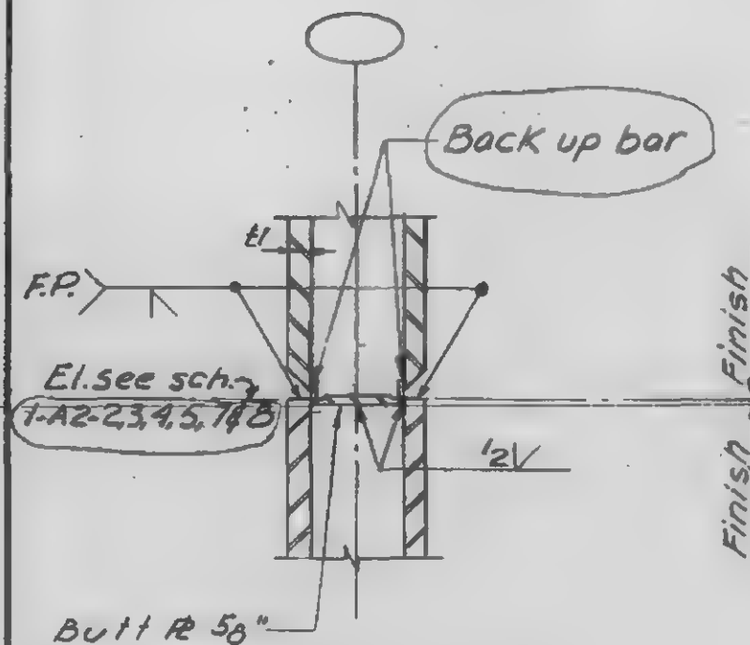

Section a-a

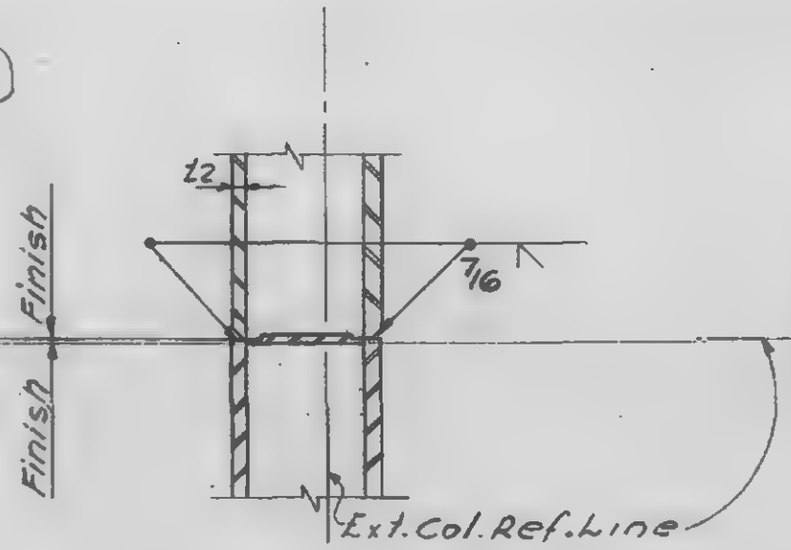

Section b-b

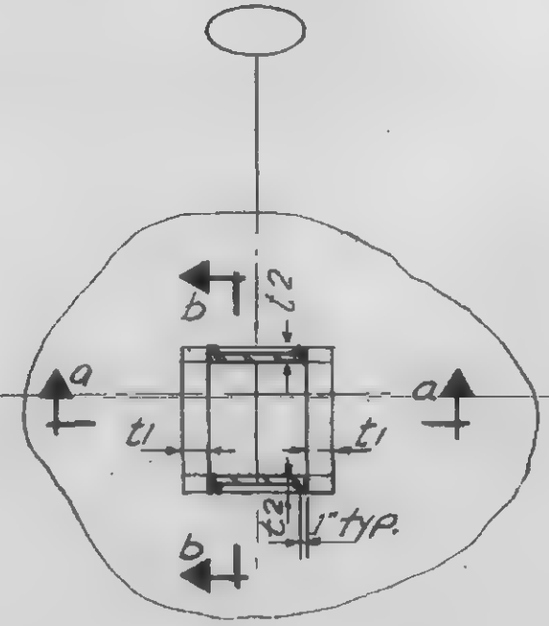

PLAN
Weld-preparation

LICENSED PROFESSIONAL ENGINEER
LESLIE E. ROBERTSON
No. 34360
UNIVERSITY OF THE STATE OF NEW YORK

1-A2-36

WORTHINGTON, SKILLING, HELLE & JACKSON — Civil & Structural Engineers

PROJECT: THE WORLD TRADE CENTER | TITLE: EXT. WALL TO EL. 363 - COL. SPLICE DETS. 700 | DATE: 2-17-67

REVISIONS

3-15-67

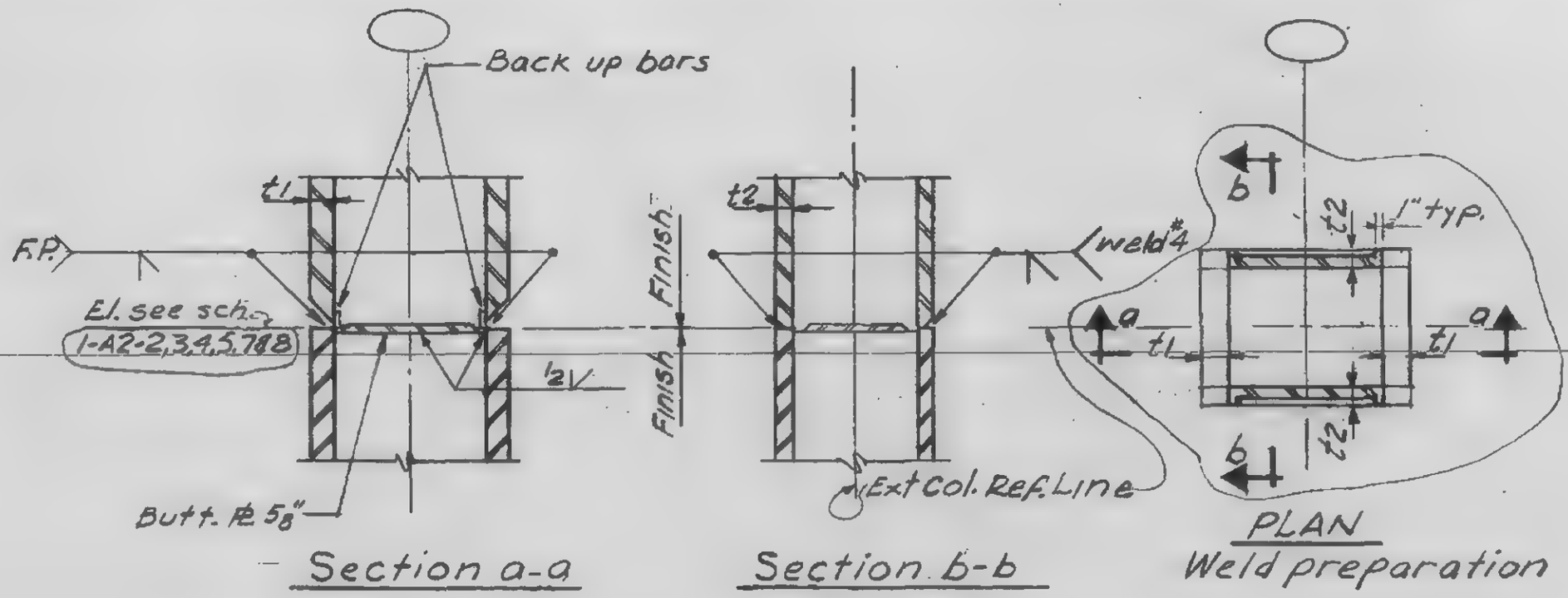

Splice detail	Weld #4
701	3/4
702	1
703	1 1/8
704	1 1/4
705	1 1/2

LICENSED PROFESSIONAL ENGINEER
LESLIE E. ROBERTSON
No. 34360
UNIVERSITY OF THE STATE OF NEW YORK

1-A2-37

WORTHINGTON, SKILLING, HELLE & JACKSON — Civil & Structural Engineers

PROJECT: THE WORLD TRADE CENTER | TITLE: EXT. WALL TO EL. 363'-SPANDREL SPLICE DETAIL A | DATE: 2-17-67

REVISIONS
3-15-67
1-26-68

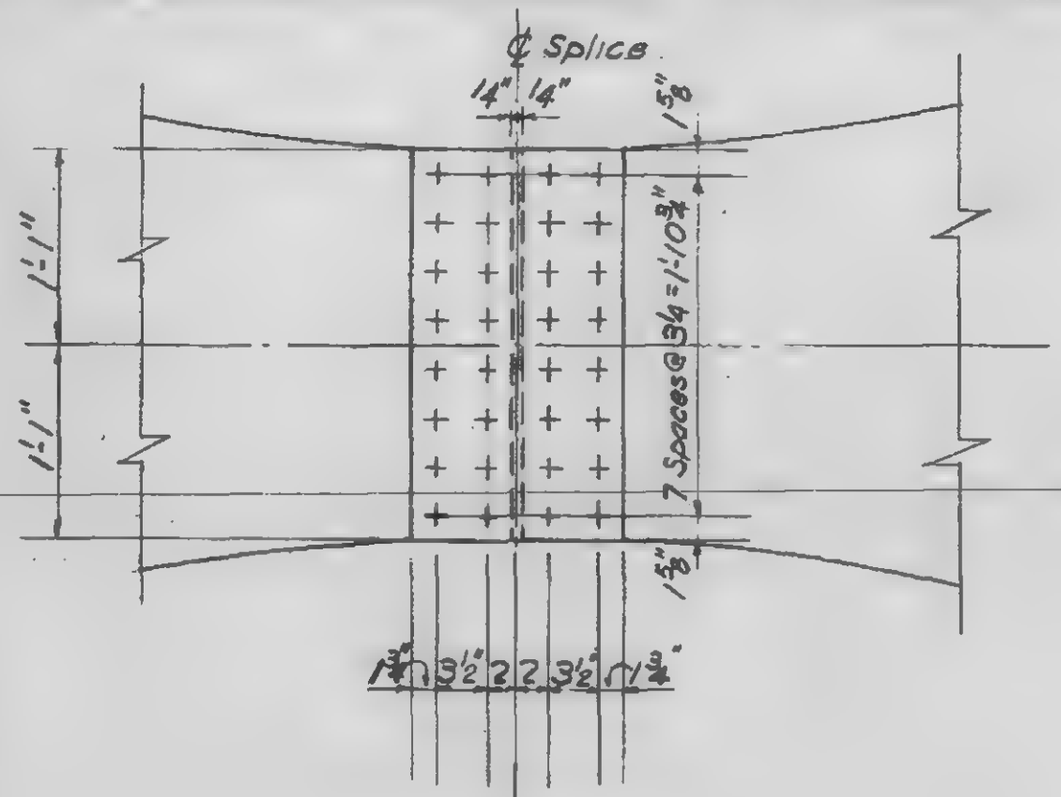

Splice Detail	Bolts
A11	32-¼" A490
A12	32-⅛" A490
A13	32-1" A490

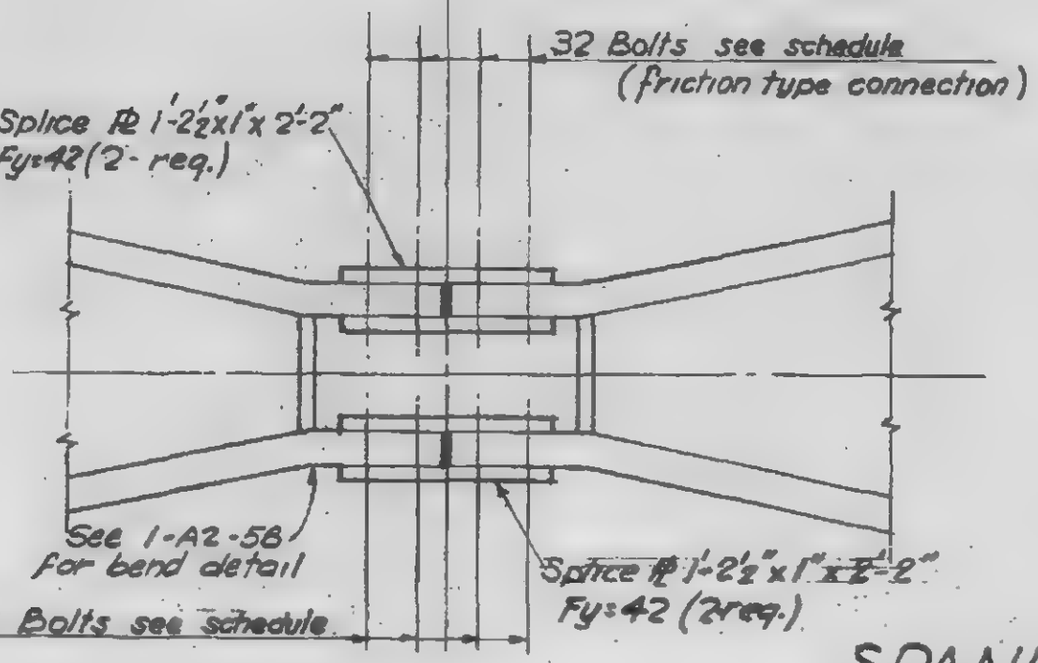

Note
Bolt holes in spandrel plates to be 3/16" larger in diameter than the schedule bolt. Holes in splice plates 1/16" larger than the schedule bolt.

LICENSED PROFESSIONAL ENGINEER — LESLIE E. ROBERTSON — N. 34160 — REGISTERED OF THE STATE OF NEW YORK

SPANDREL SPLICE DETAILS A11, A12 & A13

1"=A2-38

WORTHINGTON, SKILLING, HELLE & JACKSON — Civil & Structural Engineers

PROJECT: THE WORLD TRADE CENTER | TITLE: EXT. WALL TO EL. 363 - SPANDREL SPLICE DETAIL A | DATE: 2-17-67

REVISIONS
3-15-67
1-26-68
7-17-68

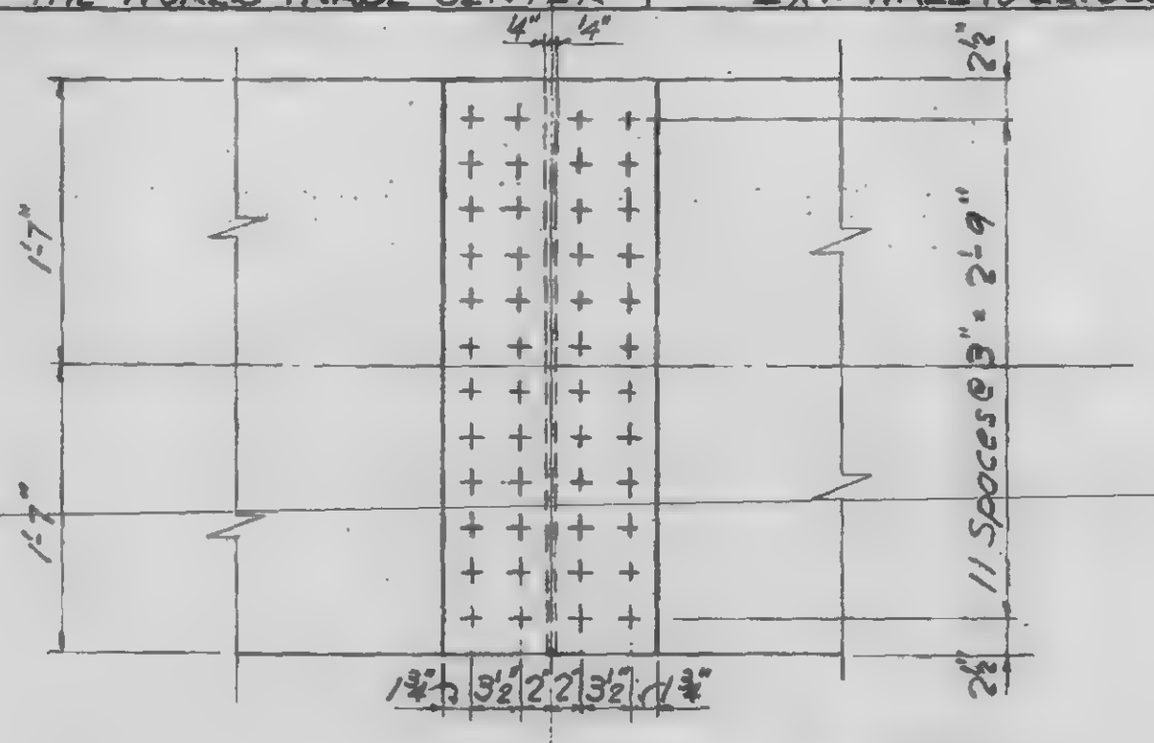

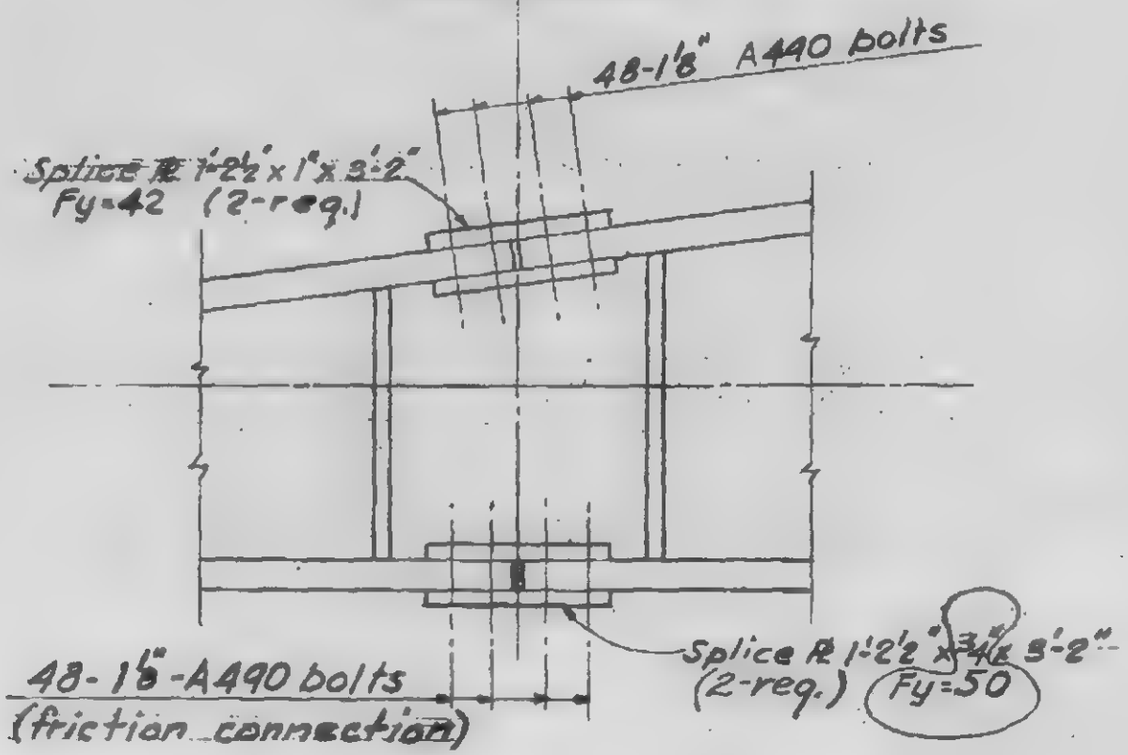

Note
Bolt holes in spandrel plates to be 3/16" larger in diameter than the schedule bolt. Holes in splice plates 1/16" larger than the schedule bolt.

LICENSED PROFESSIONAL ENGINEER
LESLIE E. ROBERTSON
No. 34360
UNIVERSITY OF THE STATE OF NEW YORK

SPANDREL SPLICE DETAIL A14

1-17-20

WORTHINGTON, SKILLING, HELLE & JACKSON — Civil & Structural Engineers

PROJECT: THE WORLD TRADE CENTER | TITLE: EXT. WALL TO EL. 363'-SPANDREL SPLICE DET. B | DATE: 2-17-67

REVISIONS
3-15-67
1-26-68

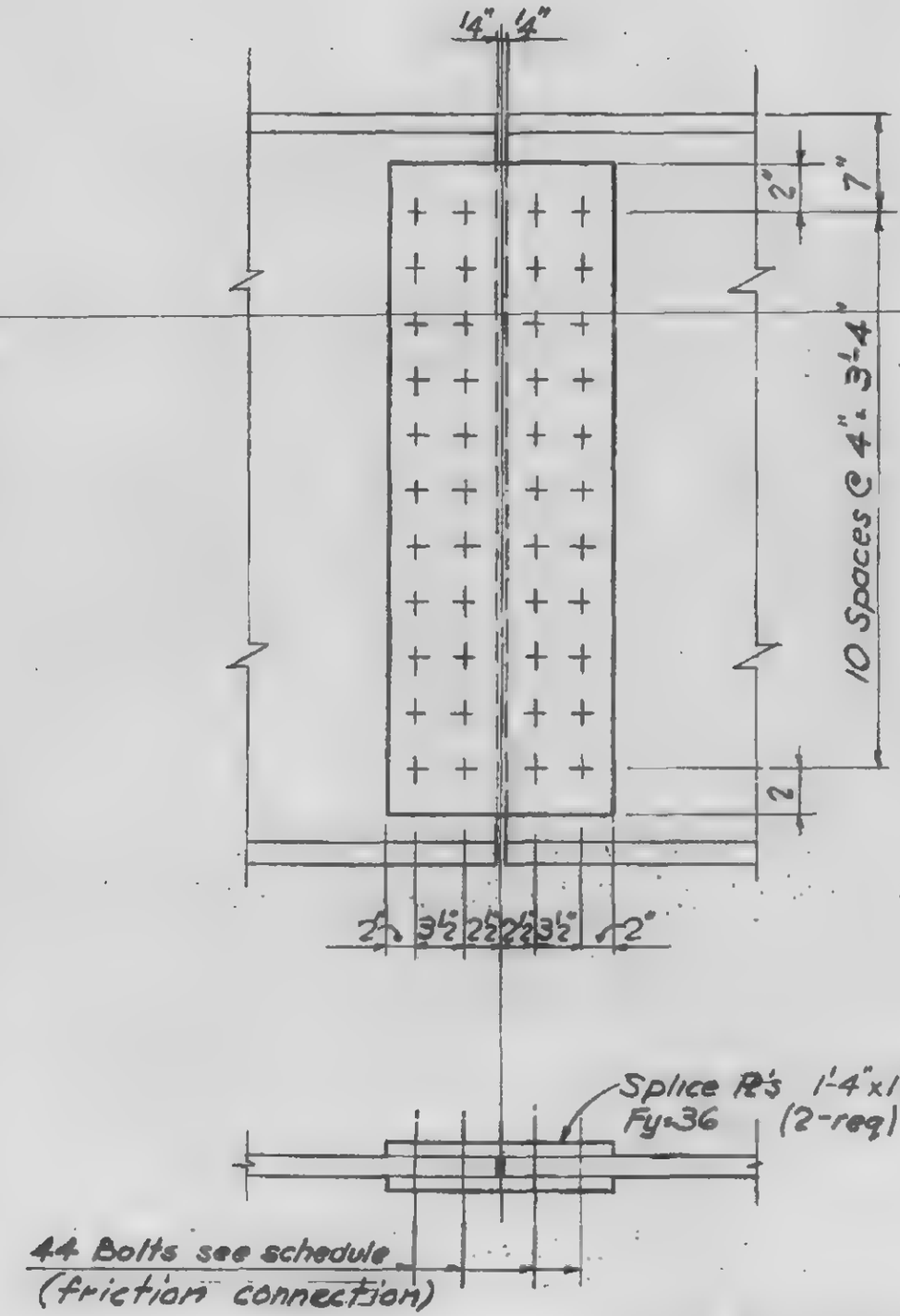

Splice Detail	Bolts
B11	44 - 1¼" A490
B12	44 - 1⅛" A490
B13	44 - 1" A-490

Note
Bolt holes in spondrel plates to be 3/16" larger in diameter than the schedule bolt. Holes in splice plates 1/16" larger than the schedule bolt.

LICENSED PROFESSIONAL ENGINEER
LESLIE E. ROBERTSON
No. 34360
UNIVERSITY OF THE STATE OF NEW YORK

SPANDREL SPLICE DETAILS B11, B12 & B13

1-A2-40

WORTHINGTON, SKILLING, HELLE & JACKSON — Civil & Structural Engineers

PROJECT: THE WORLD TRADE CENTER | TITLE: EXT. WALL TO EL. 363' - SECTION A-A | DATE: 2-17-67

REVISIONS

3-15-67

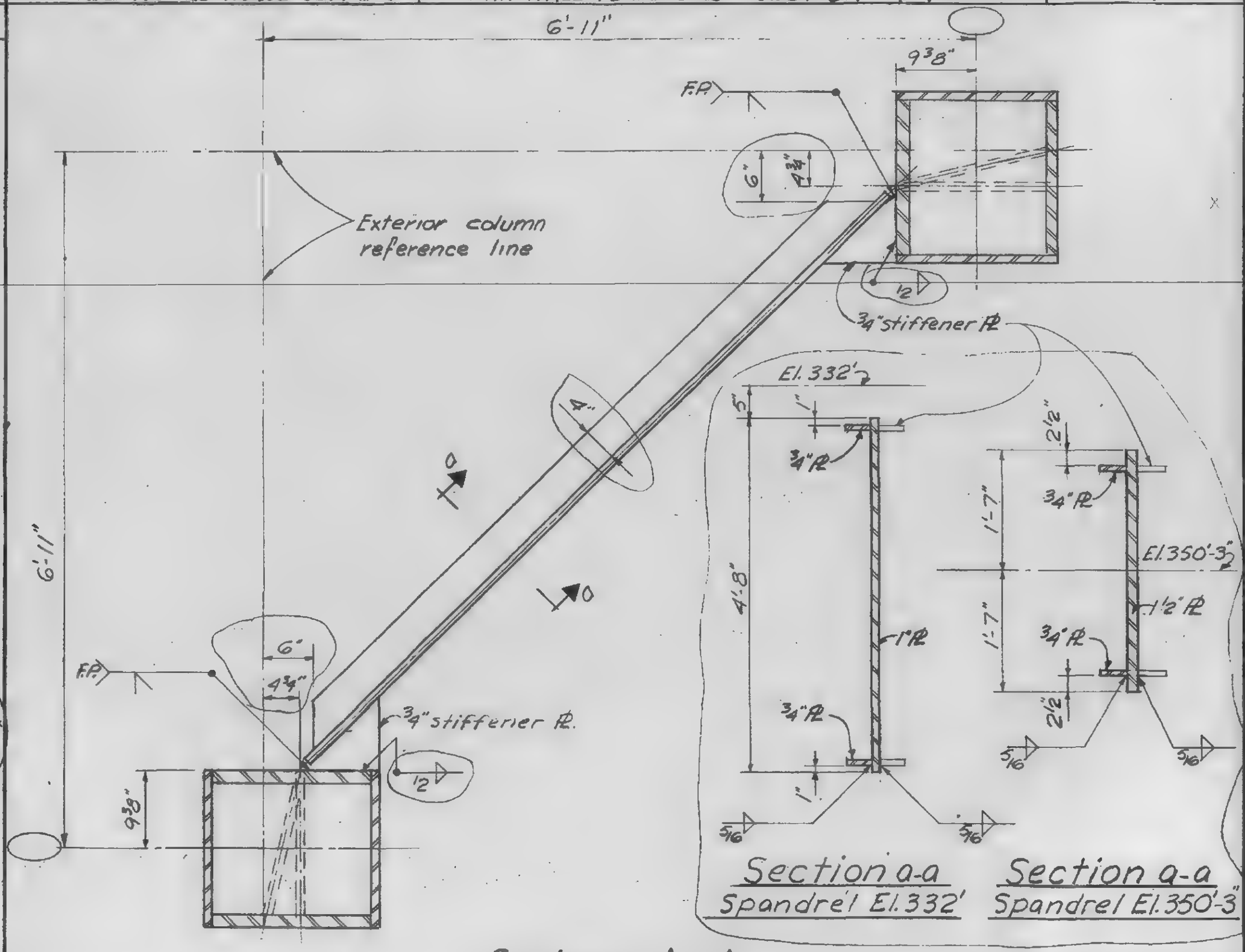

Section A-A

Section a-a
Spandrel El. 332'

Section a-a
Spandrel El. 350'-3"

LICENSED PROFESSIONAL ENGINEER
LESLIE E. ROBERTSON
No. 34360
UNIVERSITY OF THE STATE OF NEW YORK

1-A2-41

WORTHINGTON, SKILLING, HELLE & JACKSON — Civil & Structural Engineers

PROJECT: THE WORLD TRADE CENTER | TITLE: EXT. WALL TO EL. 363' - SECTION B-B | DATE: 2-17-67

REVISIONS

3-15-67

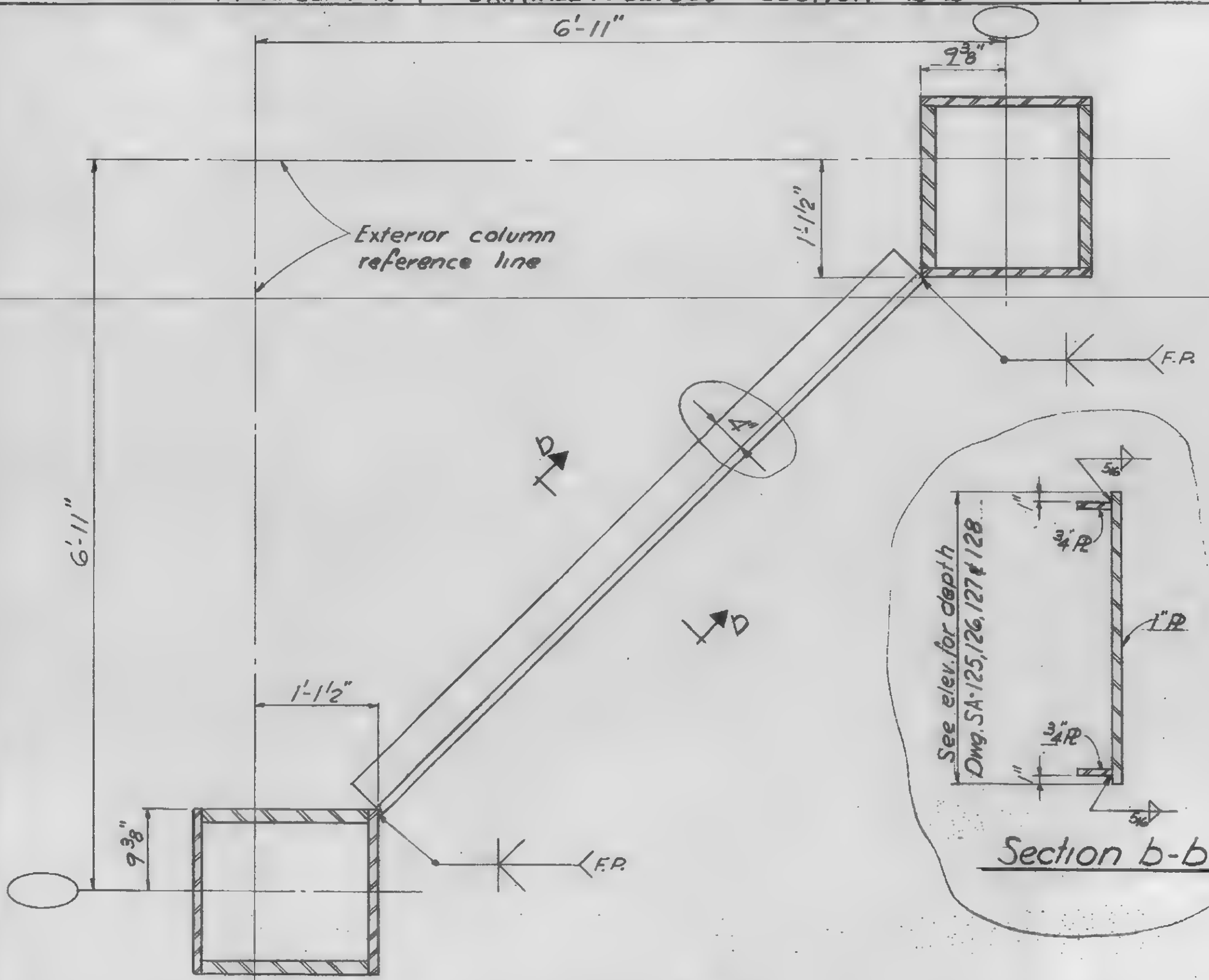

Section B-B

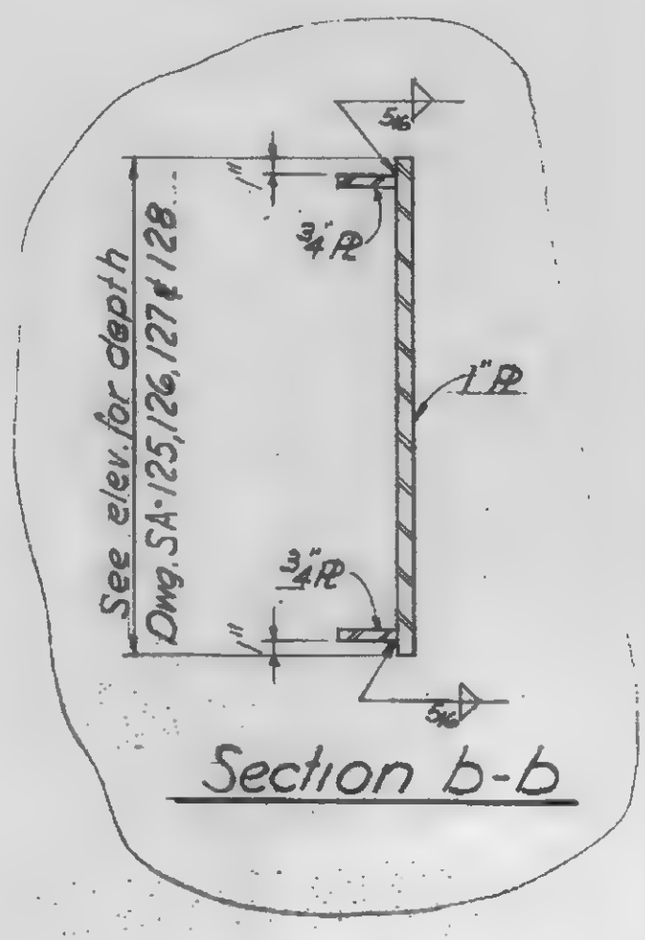

Section b-b

LICENSED PROFESSIONAL ENGINEER
LESLIE E. ROBERTSON
NO. 34360
UNIVERSITY OF THE STATE OF NEW YORK

1-A2-42

WORTHINGTON, SKILLING, HELLE & JACKSON — Civil & Structural Engineers

PROJECT THE WORLD TRADE CENTER | TITLE EXT. WALL TO EL. 363'- SECTION C-C | DATE 2-17-67

REVISIONS

3-15-67

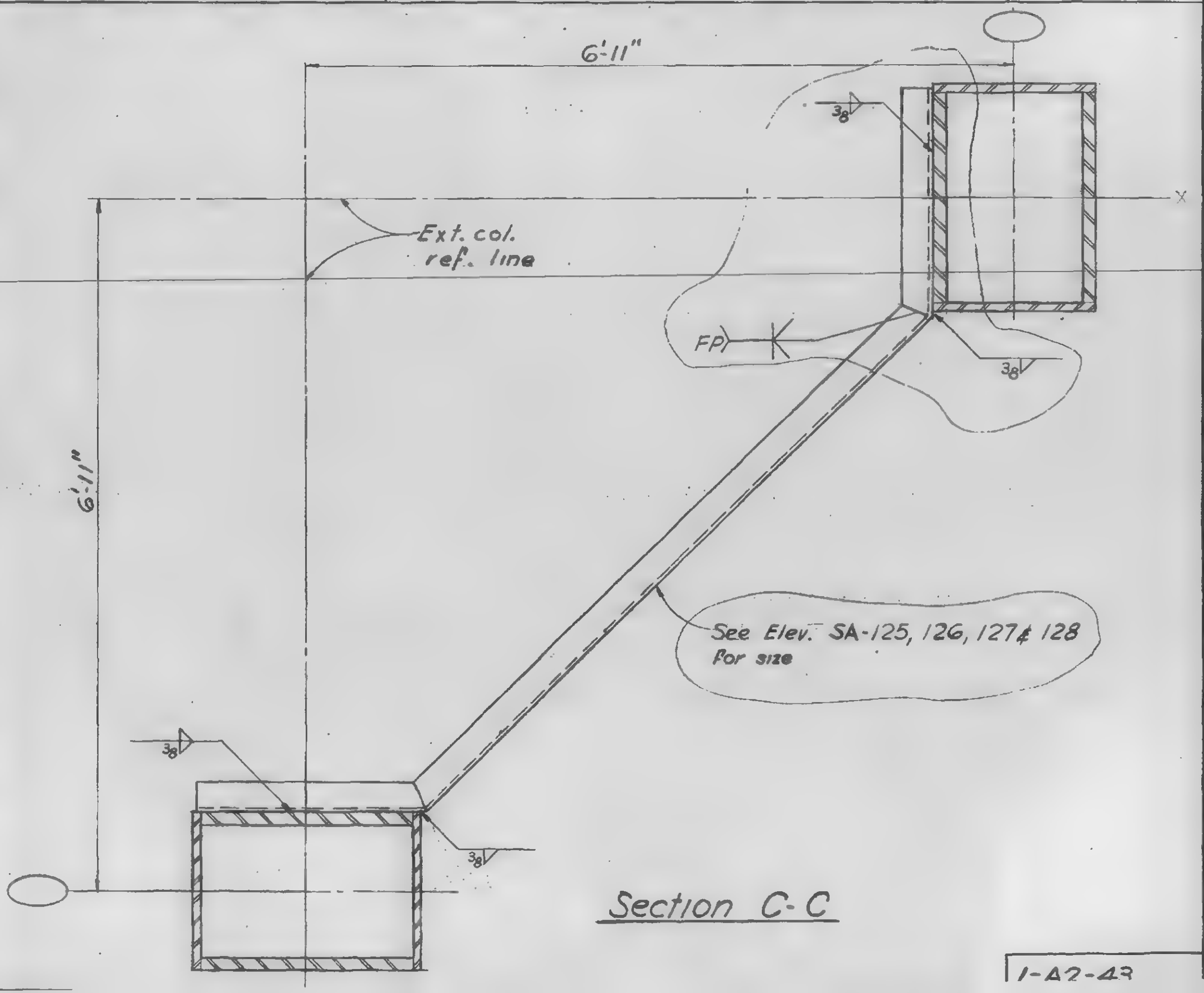

Section C-C

LICENSED PROFESSIONAL ENGINEER
LESLIE E. ROBERTSON
No. 34360
UNIVERSITY OF THE STATE OF NEW YORK

1-A2-43

WORTHINGTON, SKILLING, HELLE & JACKSON — Civil & Structural Engineers

PROJECT: WORLD TRADE CENTER | TITLE: EXT. WALL TO ELEV. 363 - GENERAL NOTES | DATE: 2-17-67

REVISIONS

3-15-67

SCHEDULE OF WELDING ELECTRODES**

(# For Fy = 36 ksi)

1.) ASTM A233 class E70xx electrodes
2.) Grade SAW-2 Submerged Arc Welding

36 < Fy, ≤ 50

1.) ASTM A233 class E70xx electrodes
2.) Grade SAW-2 Submerged Arc Welding

50 ≤ Fy, ≤ 55

1.) ASTM A233 class E70xx electrodes
2.) Submerged Arc Welding *

55 ≤ Fy, ≤ 60

1.) ASTM A316 class E80xx electrodes
2.) Submerged Arc Welding *

60 ≤ Fy, ≤ 65

1.) ASTM A316 class E80xx electrodes
2.) Submerged Arc Welding *

65 ≤ Fy, ≤ 70

1.) ASTM A316 class E80xx electrodes
2.) Submerged Arc Welding *

70 ≤ Fy, ≤ 80

1.) ASTM A316 class E90xx electrodes
2.) Submerged Arc Welding *

80 ≤ Fy, ≤ 90

1.) ASTM A316 class E100xx electrodes
2.) Submerged Arc Welding *

90 ≤ Fy, ≤ 100

1.) ASTM A316 class E110xx electrodes
2.) Submerged Arc Welding *

* Submerged arc welding shall conform to the specifications.
** Low hydrogen electrodes shall be used for all manual arc welding.

(# Fy indicated is the lower Fu of the plates joined)

GENERAL NOTES

1. Provide 1/8" x 2" or larger backing strips for all butt welds made against column plates; fillet welds to these column plates shall be increased in size in accordance with AWS specifications.
2. Where any separation between plates to be joined by fillet welds exceeds 3/16", filler plates shall be used and overlapped according to AWS specifications.
3. All welding to be done using electrodes as scheduled this sheet.
4. F.P. ⟩— indicates full penetration weld

LICENSED PROFESSIONAL ENGINEER — LESLIE E. ROBERTSON — No. 34360 — UNIVERSITY OF THE STATE OF NEW YORK

1-A2-44

WORTHINGTON, SKILLING, HELLE & JACKSON — Civil & Structural Engineers

PROJECT: THE WORLD TRADE CENTER | TITLE: EXT. WALL TO EL. 363 - SPANDREL TYPE C | DATE: 2-17-67

REVISIONS

3-15-67

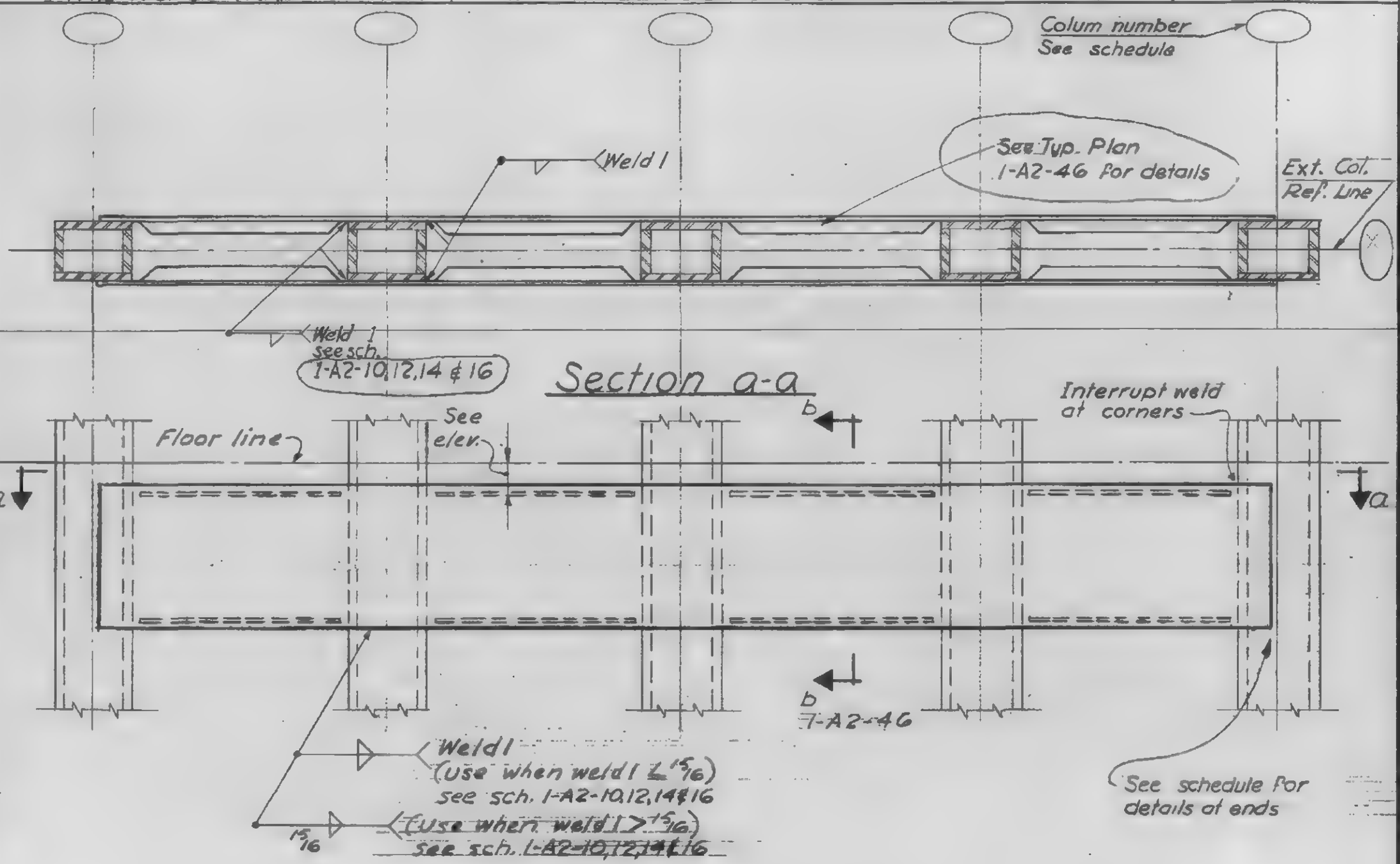

Elevation

SPANDREL TYPE C41

1-A2-45

LICENSED PROFESSIONAL ENGINEER
LESLIE E. ROBERTSON
No. 34360
UNIVERSITY OF THE STATE OF NEW YORK

WORTHINGTON, SKILLING, HELLE & JACKSON — Civil & Structural Engineers

PROJECT: THE WORLD TRADE CENTER | TITLE: EXTERIOR WALL TO El. 363'-0" - SPANDREL TYPE C | DATE: 2-17-67

REVISIONS

3-15-67
5-8-67
1-10-68

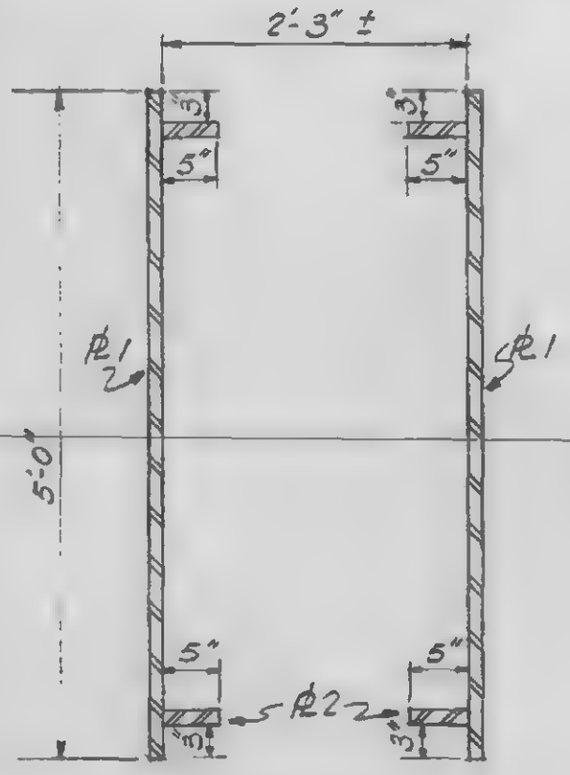

Section b-b

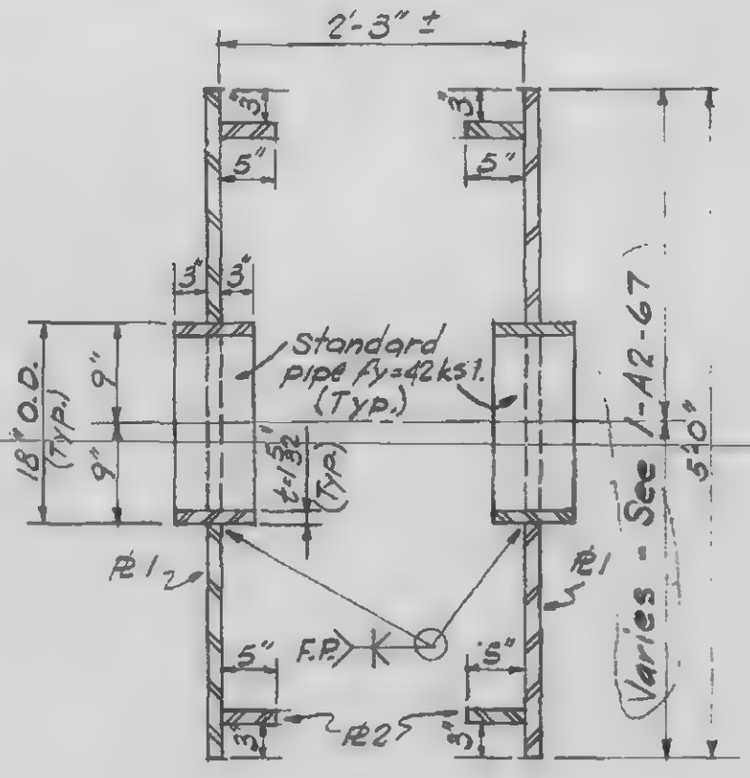

Section c-c

Spandrel Type	℄1	℄2
C41	1"	1 3/8"
C411	1"	1 3/8"
C412	1"	1 3/8"
C413	1"	1 3/8"
C414	1"	1 3/8"

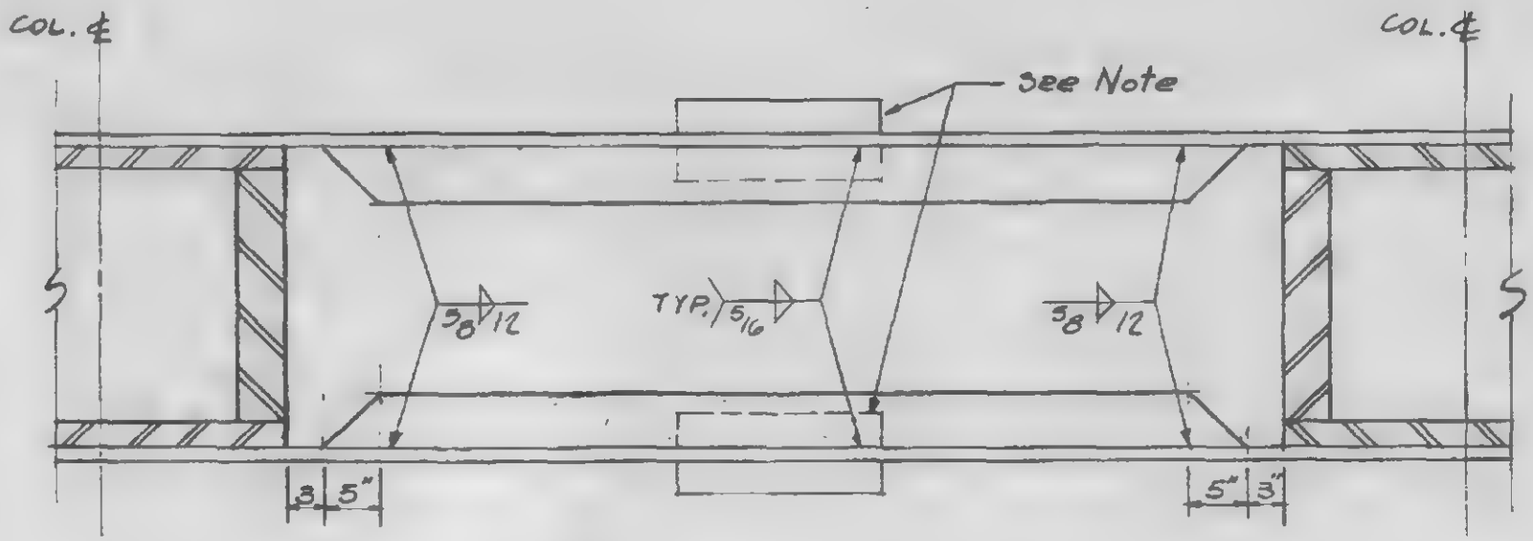

Typical Plan

Note:
Pipe exists for all spandrel types except C41. For exact location see sh. 1-A2-67

LICENSED PROFESSIONAL ENGINEER
LESLIE E. ROBERTSON
No. 34360
UNIVERSITY OF THE STATE OF NEW YORK

1-A2-46

WORTHINGTON, SKILLING, HELLE & JACKSON — Civil & Structural Engineers

PROJECT: THE WORLD TRADE CENTER | TITLE: EXT. WALL TO EL. 363 - STRUT TYPE D | DATE: 2-17-67

REVISIONS

3-15-67

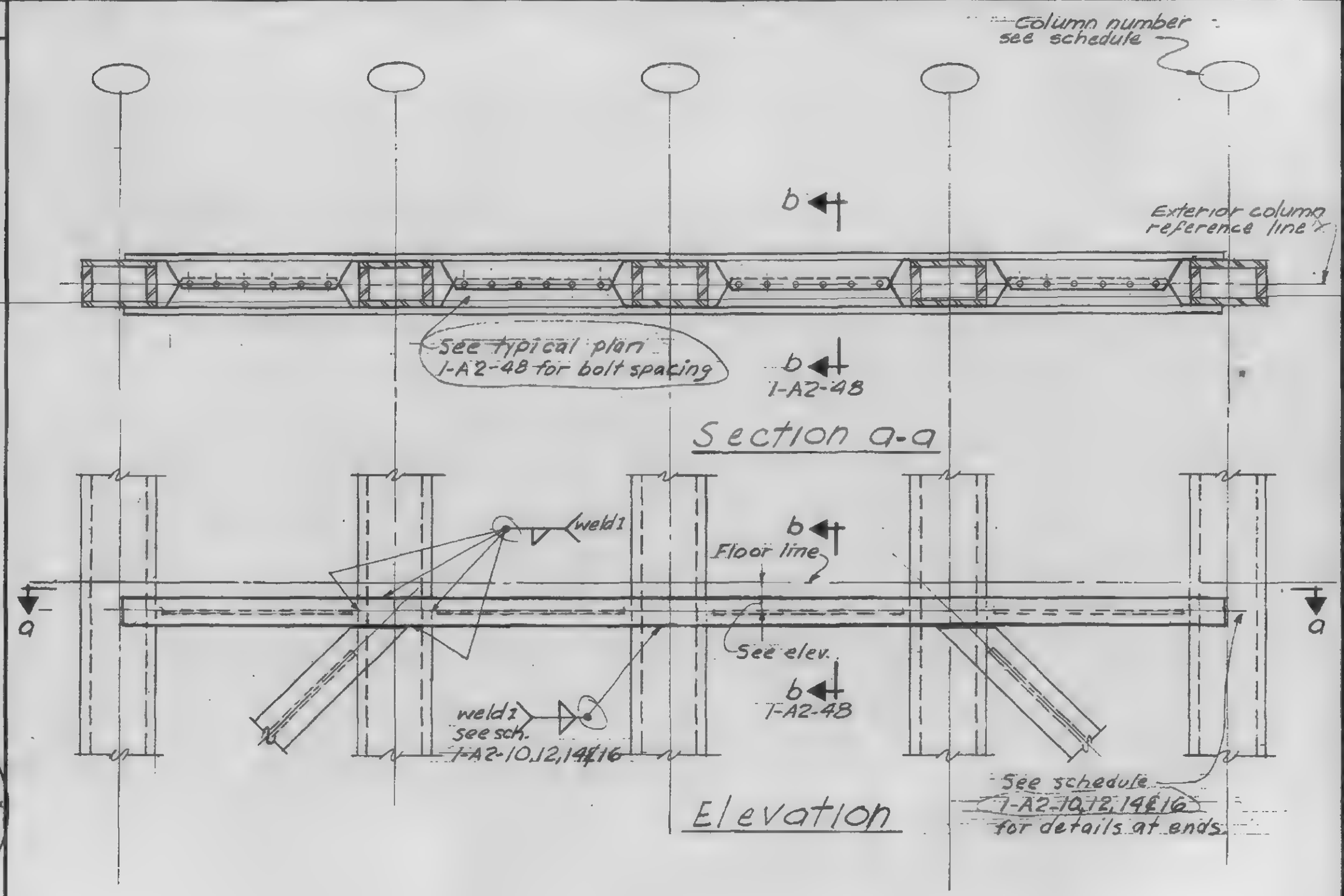

Section a-a

Elevation

LICENSED PROFESSIONAL ENGINEER
LESLIE E. ROBERTSON
NO. 34360
UNIVERSITY OF THE STATE OF NEW YORK

STRUT TYPE D41

1-A2-47

WORTHINGTON, SKILLING, HELLE & JACKSON — Civil & Structural Engineers

PROJECT THE WORLD TRADE CENTER | TITLE EXT. WALL TO EL. 363 - STRUT TYPE D | DATE 2-17-67

REVISIONS

3-15-67

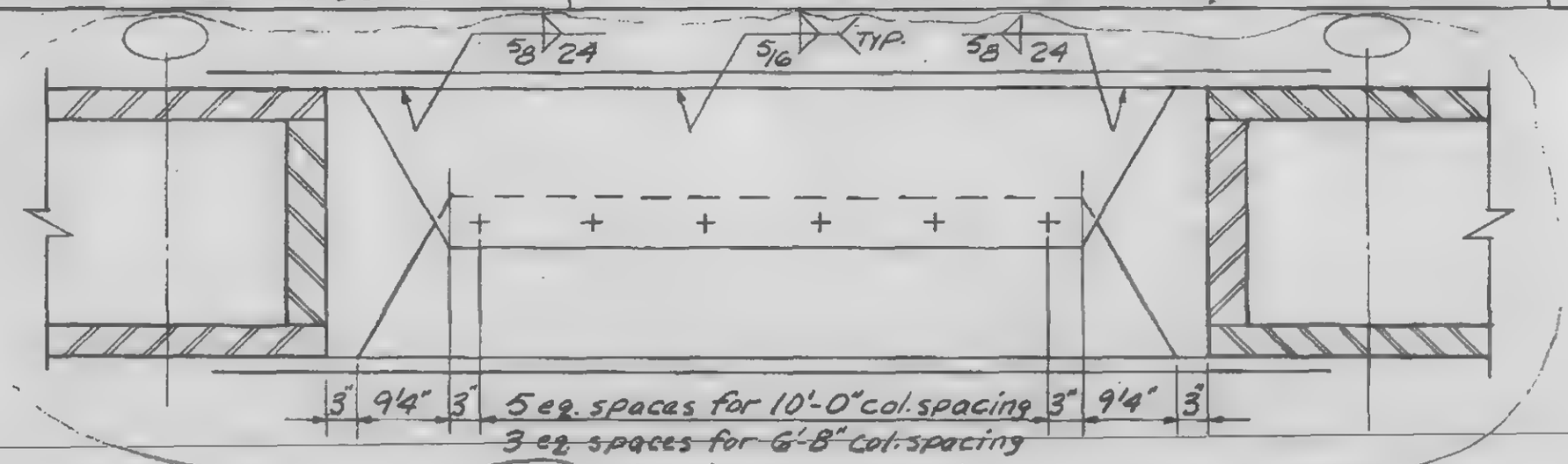

Typical plan

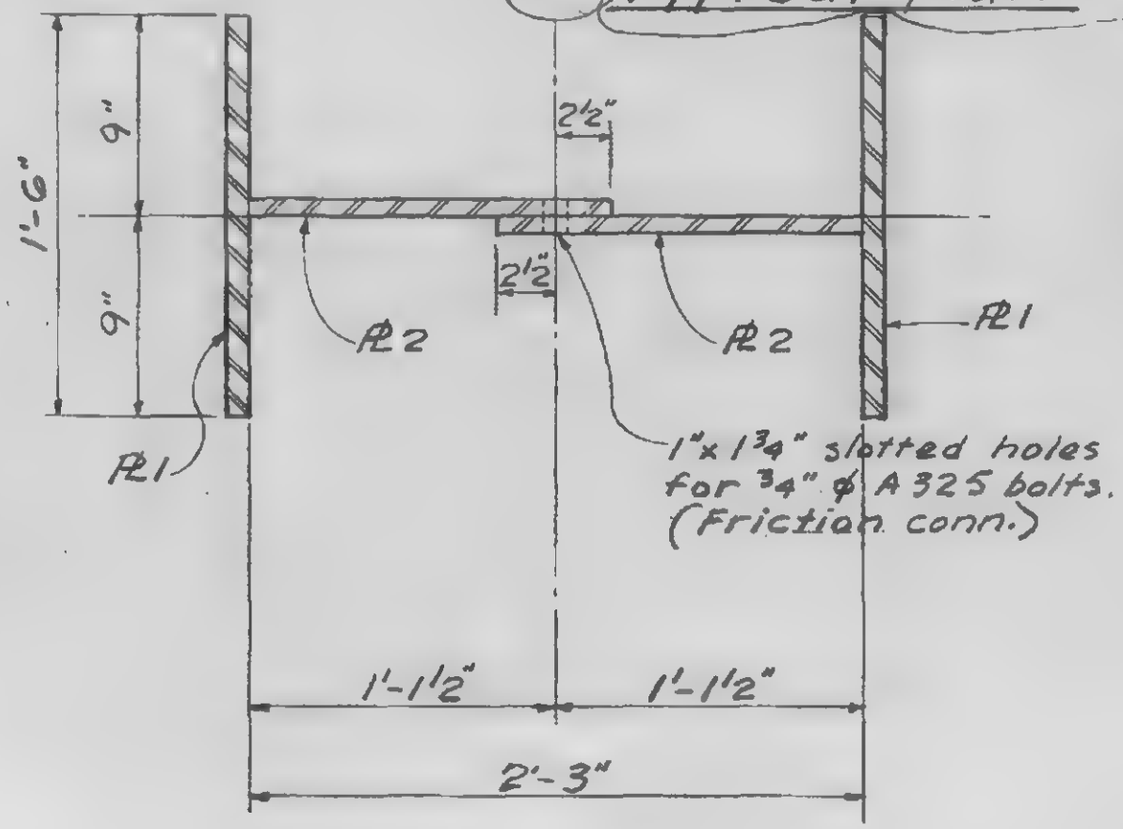

Strut type	R1	R2
D41	1½"	¾"

Section b-b

STRUT TYPE D41

1-A2-48

LICENSED PROFESSIONAL ENGINEER LESLIE E. ROBERTSON No. 34360 UNIVERSITY OF THE STATE OF NEW YORK

WORTHINGTON, SKILLING, HELLE & JACKSON — Civil & Structural Engineers

PROJECT: THE WORLD TRADE CENTER | TITLE: EXT. WALL TO ELEV. 363'-STRUT TYPE E | DATE: 2-17-67

REVISIONS

3-15-67

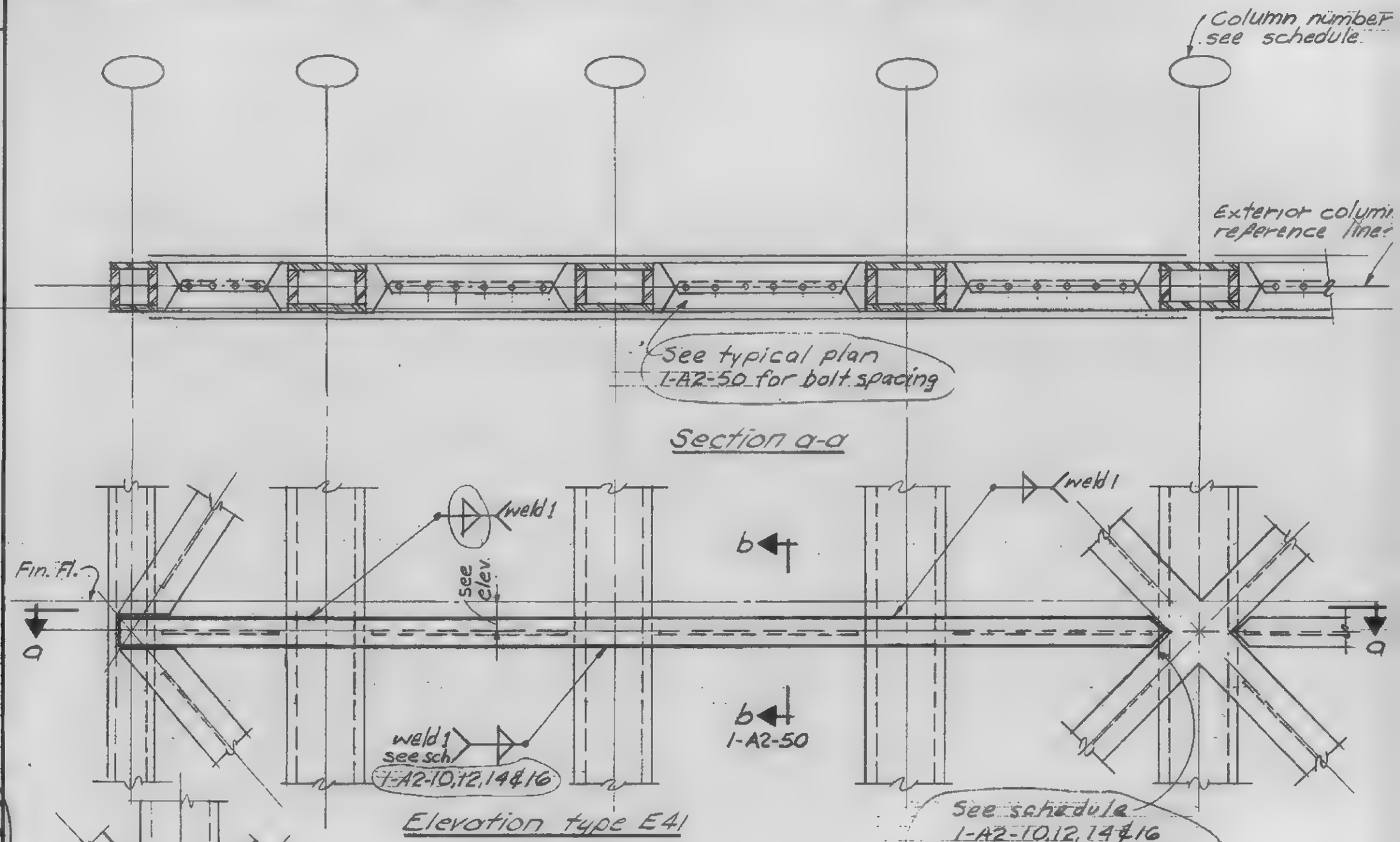

Elevation type E41

Balance of type E42 same as type E41.

Part elevation type E42

LICENSED PROFESSIONAL ENGINEER
LESLIE E. ROBERTSON
No. 34360
UNIVERSITY OF THE STATE OF NEW YORK

STRUT TYPE E41 & E42

1-A2-49

WORTHINGTON, SKILLING, HELLE & JACKSON — Civil & Structural Engineers

PROJECT: WORLD TRADE CENTER | TITLE: EXT WALL TO ELEV. 363 - STRUT TYPE E | DATE: 2-17-67

REVISIONS

3-15-67

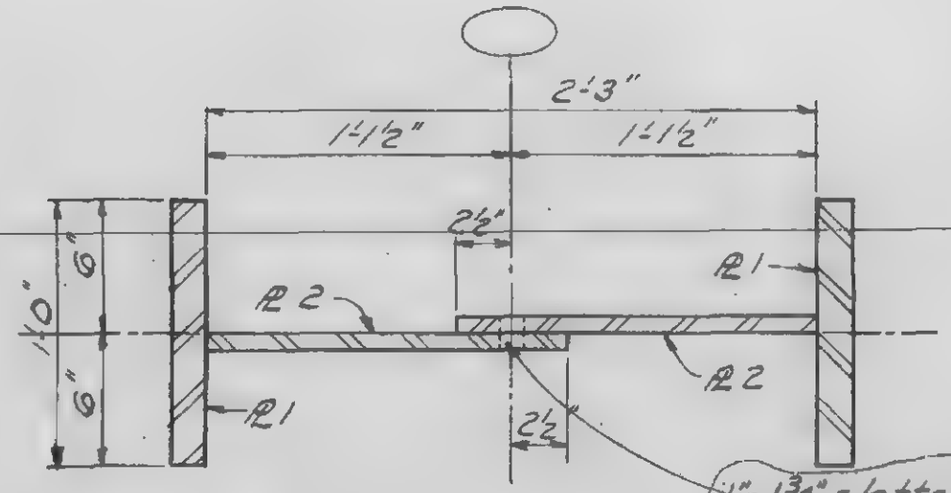

Strut type	R1	R2
E41	1/2	3/4
E42	1/2	3/4

Section b-b

1"x1¾" slotted holes for ¾" ϕ A325 bolts. (Friction connection)

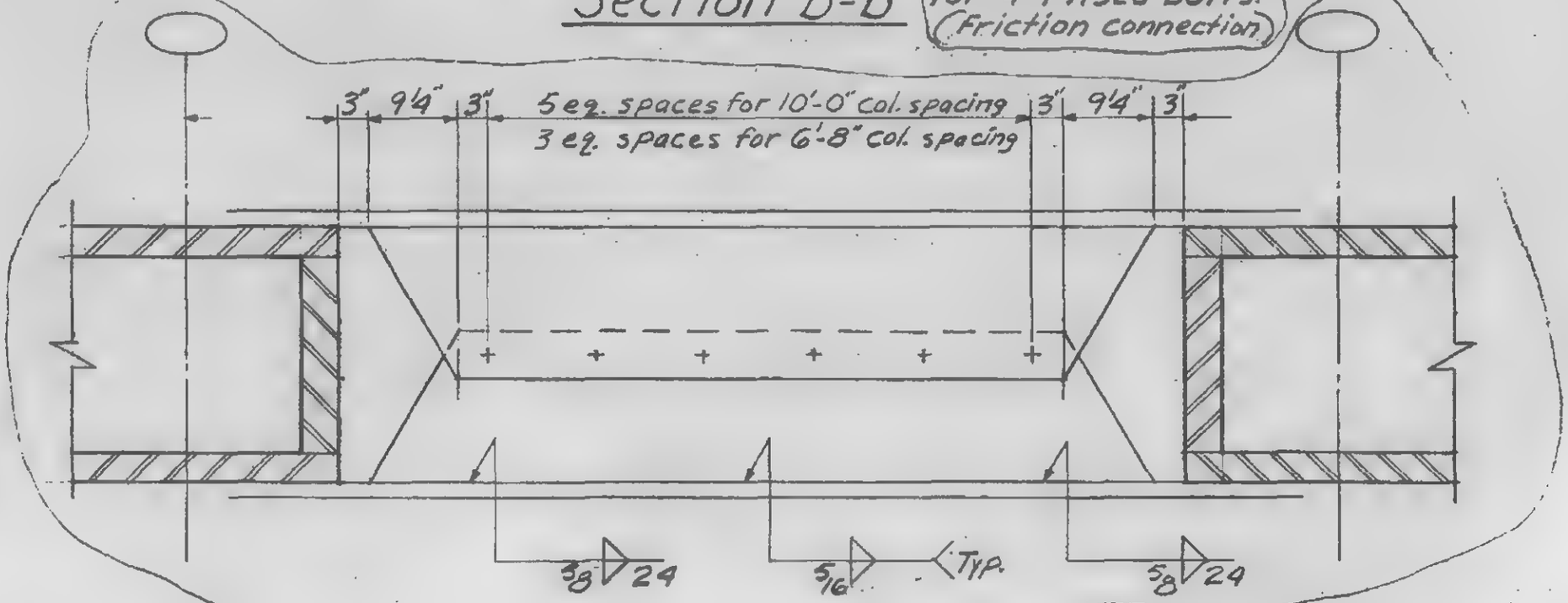

Typical plan

STRUT TYPE E41 & E42

LICENSED PROFESSIONAL ENGINEER
LESLIE E. ROBERTSON
No. 34360
UNIVERSITY OF THE STATE OF NEW YORK

1-A2-50

WORTHINGTON, SKILLING, HELLE & JACKSON — Civil & Structural Engineers

PROJECT: THE WORLD TRADE CENTER | TITLE: EXT. WALL TO EL. 363'- STRUT TYPE F | DATE: 2-17-67

REVISIONS

3-15-67

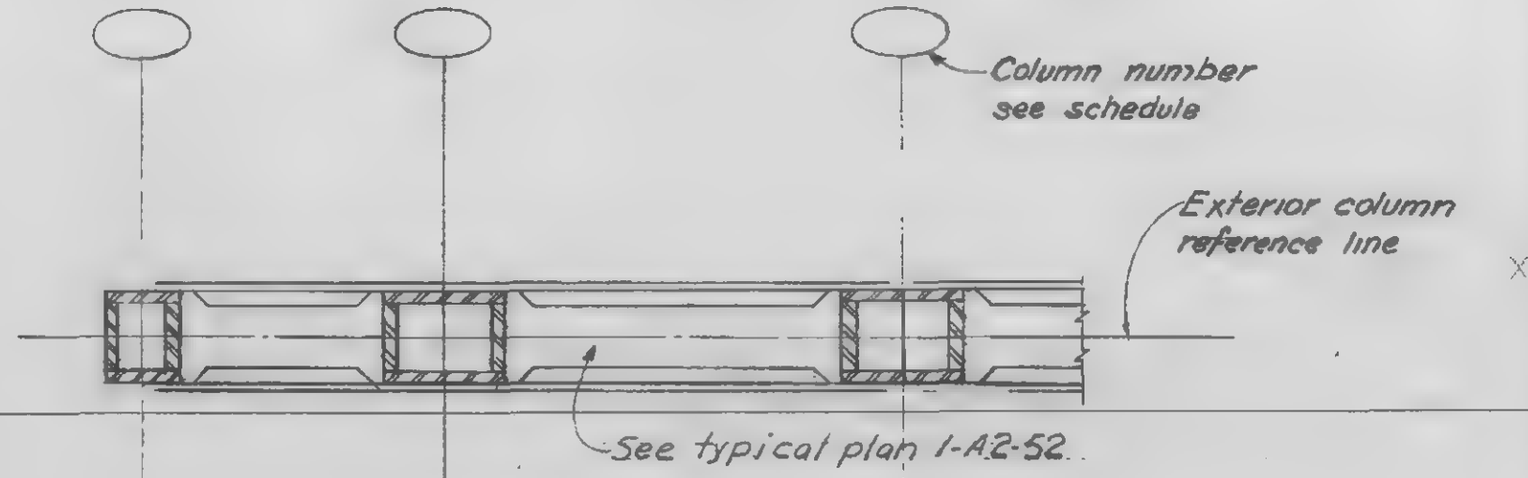

Section a-a

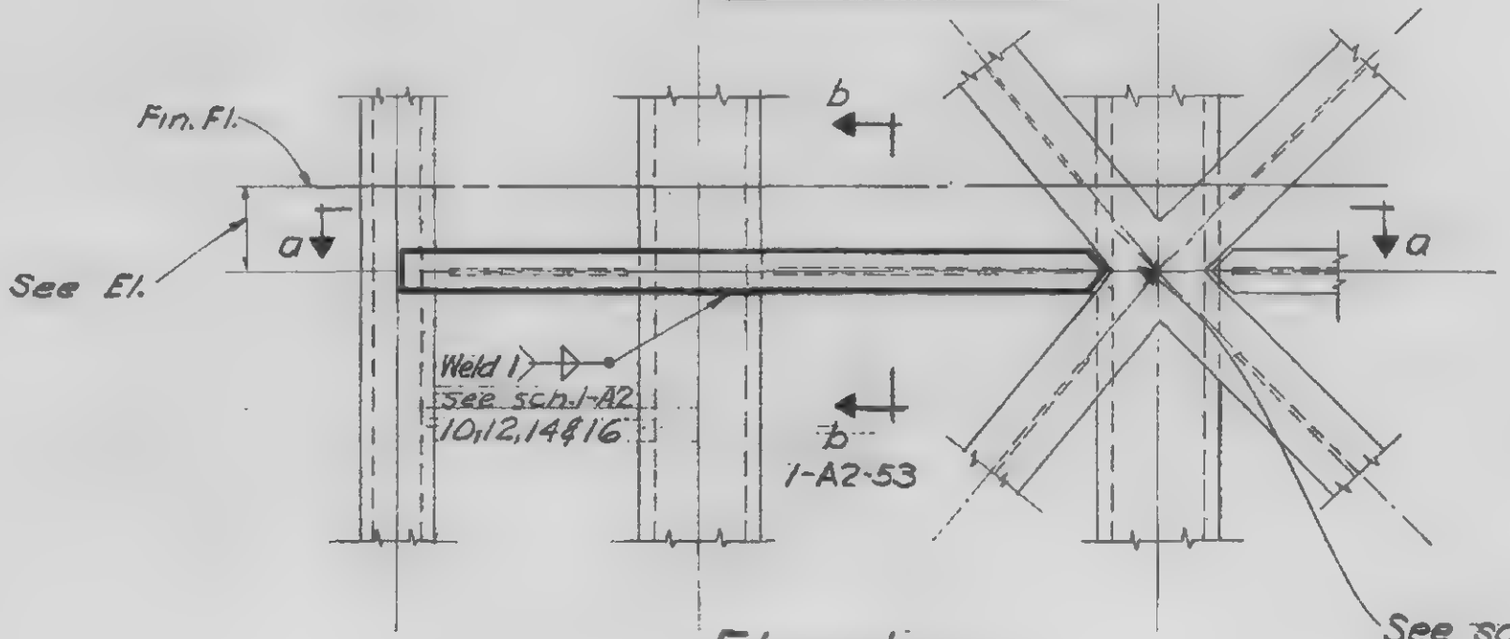

Elevation

LICENSED PROFESSIONAL ENGINEER
LESLIE E. ROBERTSON
No. 34360
UNIVERSITY OF THE STATE OF NEW YORK

STRUT TYPE F21

STRUT TYPE F22 Opp. hand

1-A2-51

WORTHINGTON, SKILLING, HELLE & JACKSON Civil & Structural Engineers

PROJECT THE WORLD TRADE CENTER | TITLE EXT. WALL TO EL. 363'- STRUT TYPE F | DATE 2-17-67

REVISIONS

3-15-67

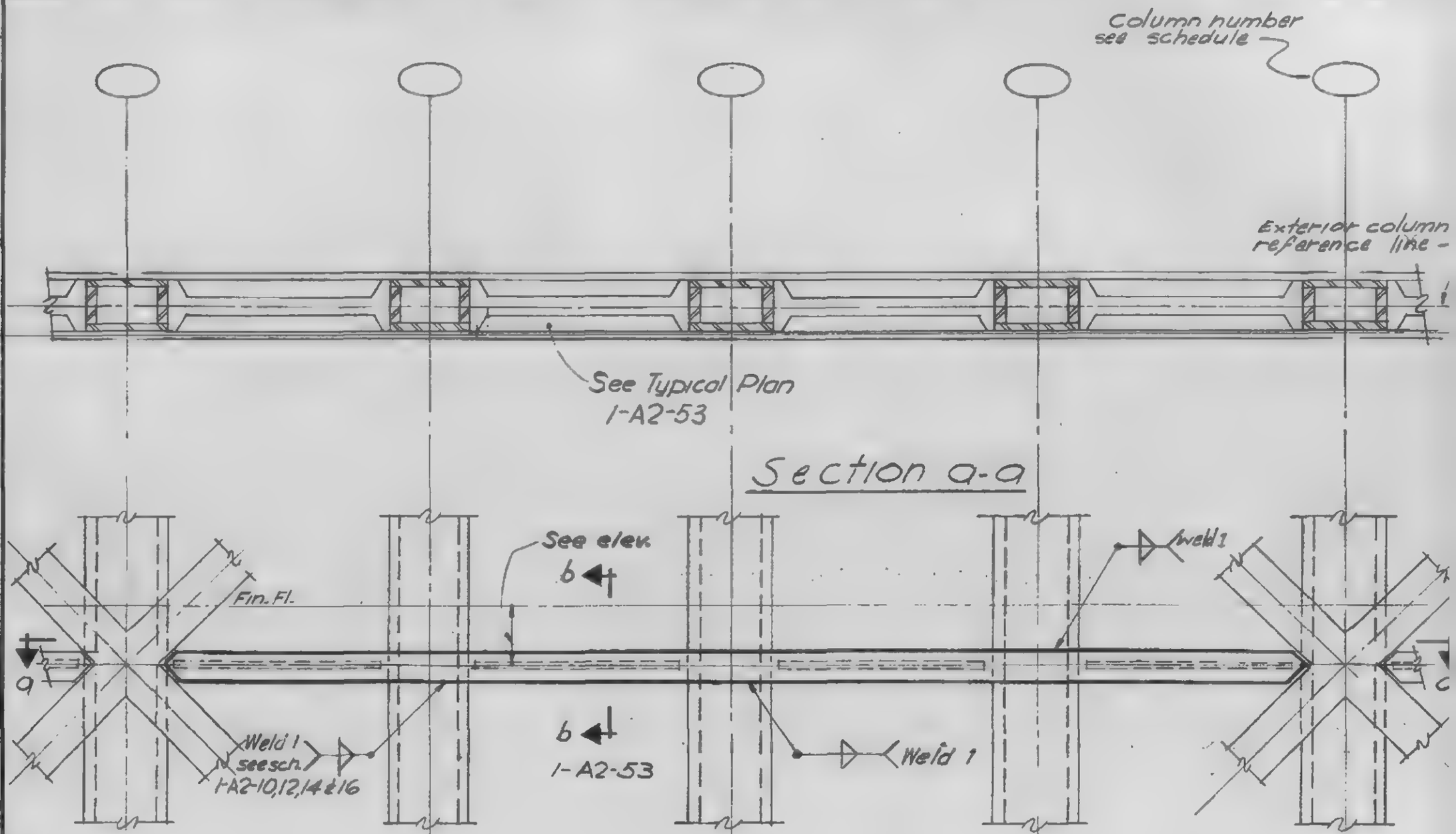

Section a-a

Elevation

STRUT TYPE F4I

LICENSED PROFESSIONAL ENGINEER LESLIE E. ROBERTSON No. 34360 UNIVERSITY OF THE STATE OF NEW YORK

1-A2-52

WORTHINGTON, SKILLING, HELLE & JACKSON — Civil & Structural Engineers

PROJECT: THE WORLD TRADE CENTER | TITLE: EXT. WALL TO EL. 363'- STRUT TYPE F | DATE: 2-17-67

REVISIONS

3-15-67

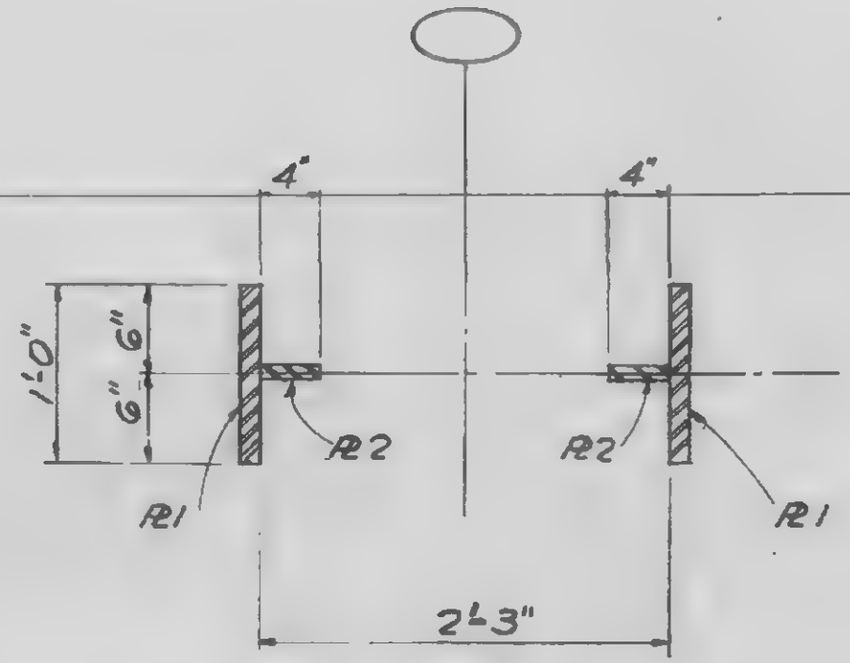

Section b-b

Strut Type	R1	R2
F21	1¼"	¾"
F22	1¼"	¾"
F41	1¼"	¾"

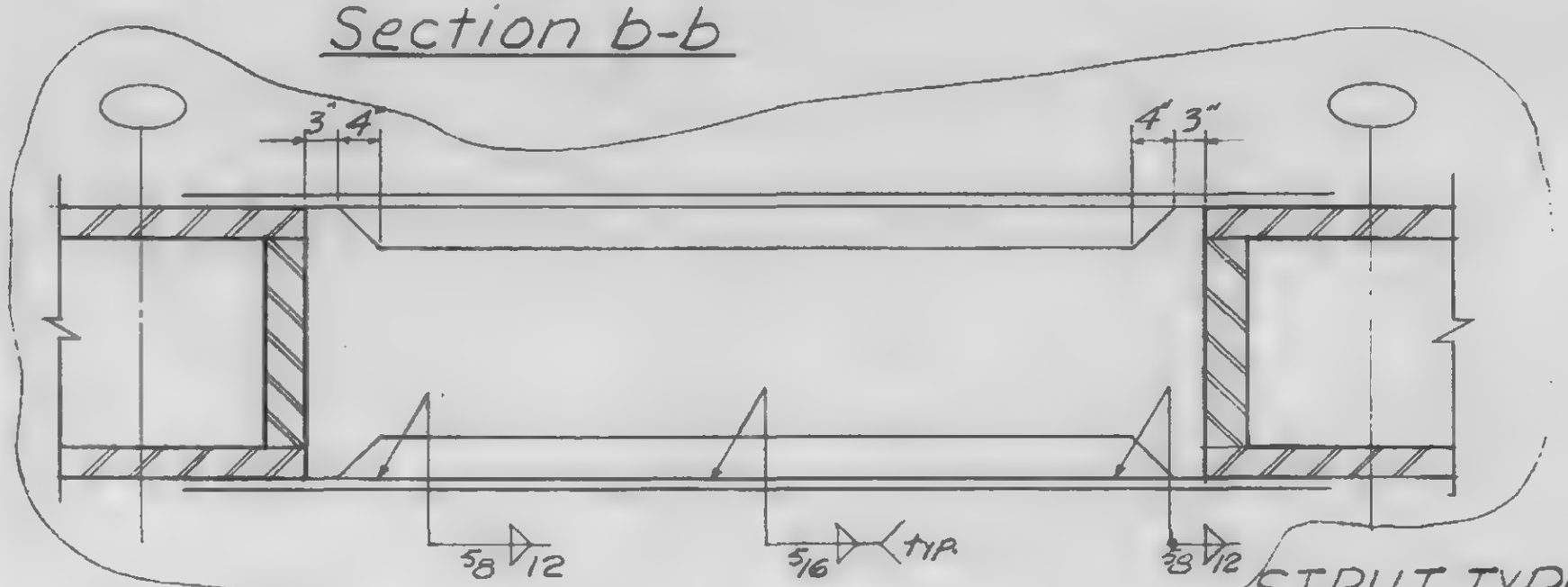

Typical plan

STRUT TYPE-F21, F22 & F41

1-A2-53

LICENSED PROFESSIONAL ENGINEER
LESLIE E. ROBERTSON
No. 34360
UNIVERSITY OF THE STATE OF NEW YORK

WORTHINGTON, SKILLING, HELLE & JACKSON . Civil & Structural Engineers

PROJECT THE WORLD TRADE CENTER | TITLE EXT. WALL TO EL. 363 - STRUT TYPE H | DATE 2-17-67

REVISIONS

3-15-67

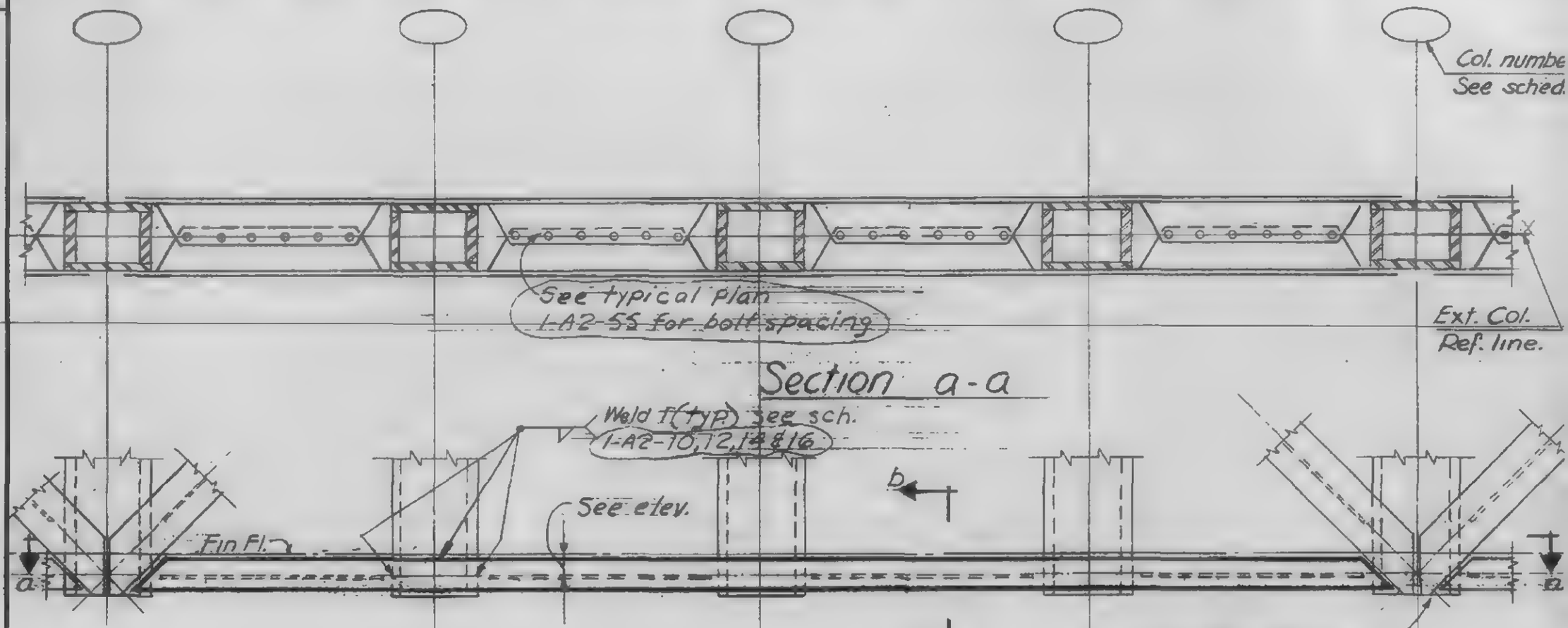

Elevation

STRUT TYPE H41

1-A2-54

LICENSED PROFESSIONAL ENGINEER
LESLIE E. ROBERTSON
No. 34360
UNIVERSITY OF THE STATE OF NEW YORK

WORTHINGTON, SKILLING, HELLE & JACKSON — Civil & Structural Engineers

PROJECT: THE WORLD TRADE CENTER | TITLE: EXT. WALL TO EL. 363 STRUT TYPE H | DATE: 2-17-67

REVISIONS

3-15-67

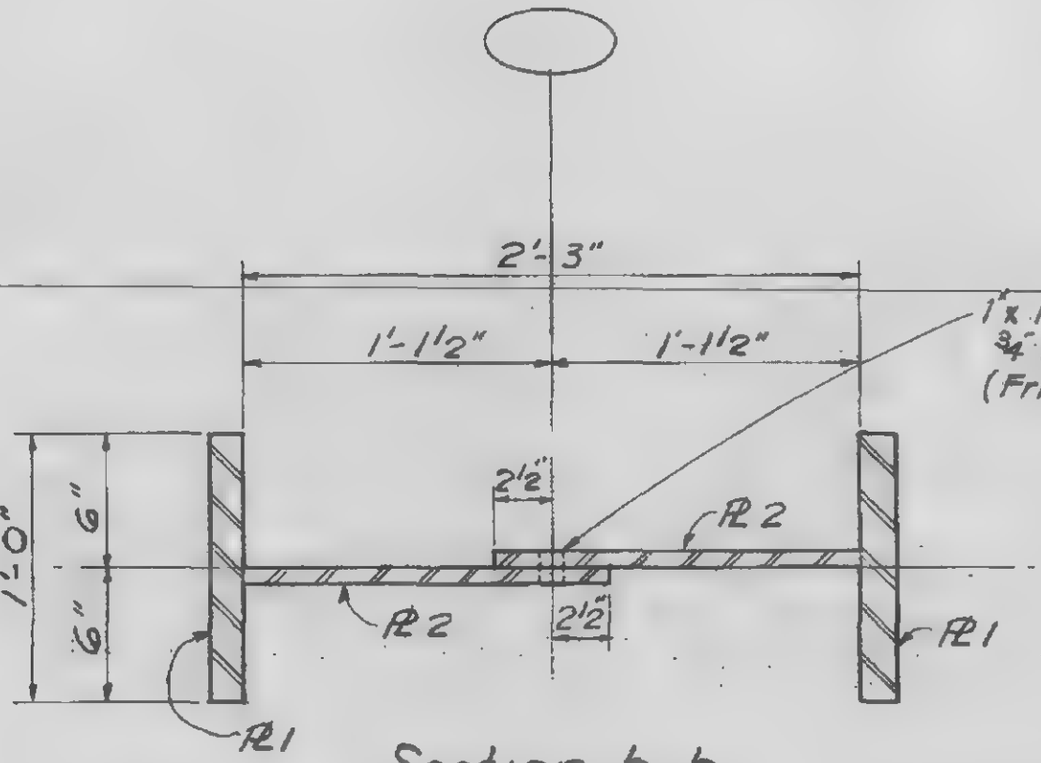

Strut type	PL 1	PL 2
H41	1½"	¾"

Section b-b

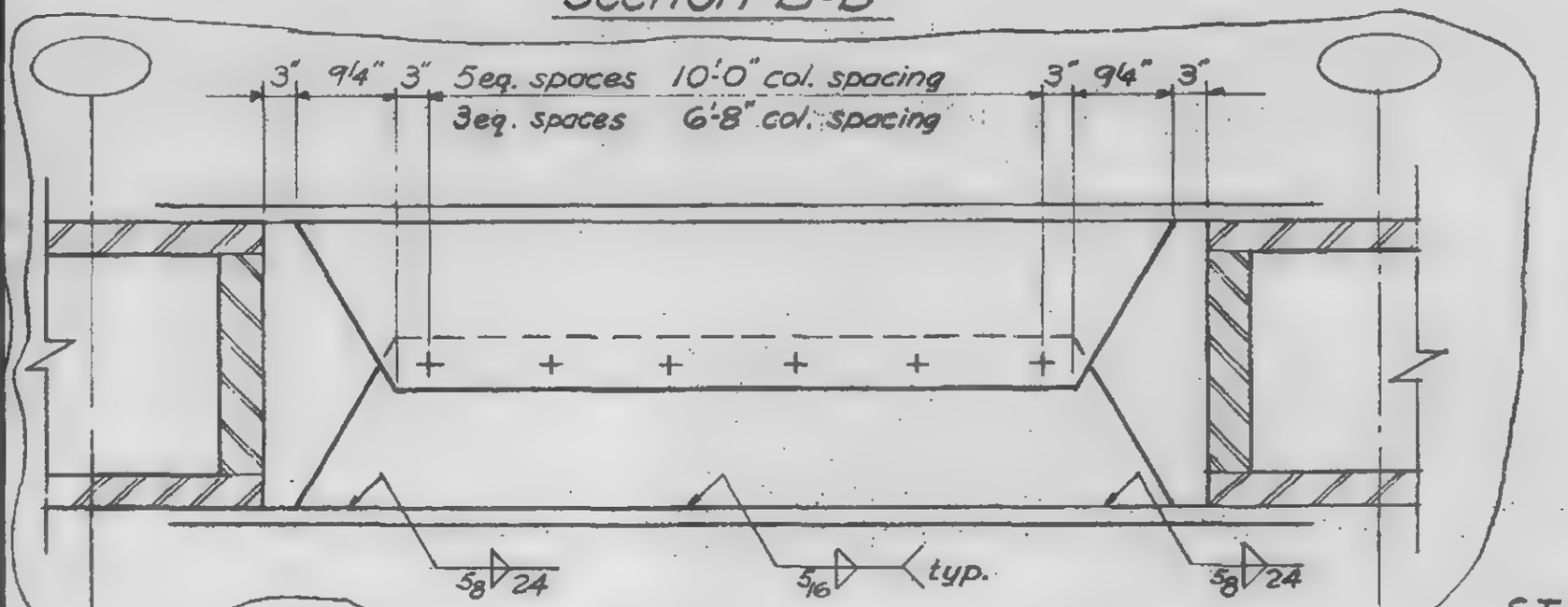

Typical Plan

STRUT TYPE H41

1-A2-55

LICENSED PROFESSIONAL ENGINEER
LESLIE E. ROBERTSON
No. 34360
UNIVERSITY OF THE STATE OF NEW YORK

WORTHINGTON, SKILLING, HELLE & JACKSON — Civil & Structural Engineers

PROJECT: THE WORLD TRADE CENTER | TITLE: EXT. WALL TO EL. 363' - BRACING TYPE G | DATE: 2-17-67

REVISIONS

3-15-67
4-24-67

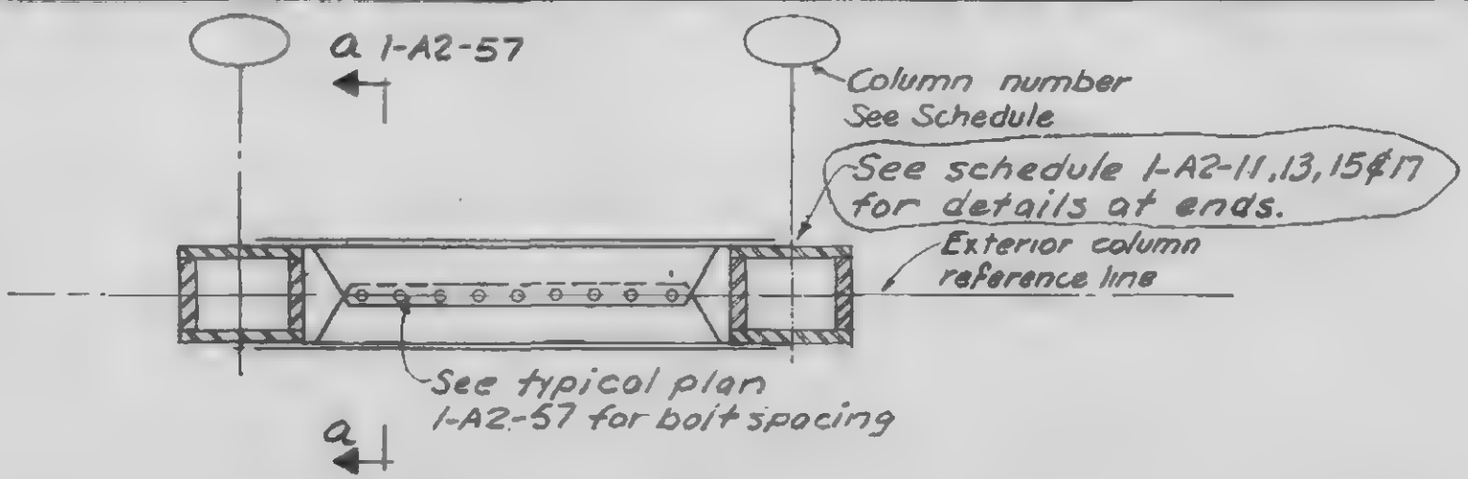

BRACING TYPE G 11

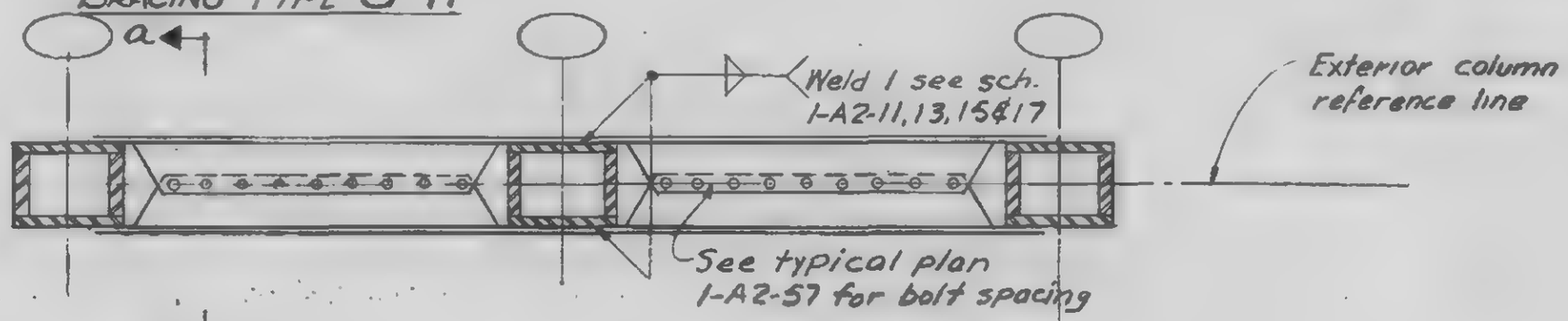

BRACING TYPE G 21, G 22, G23

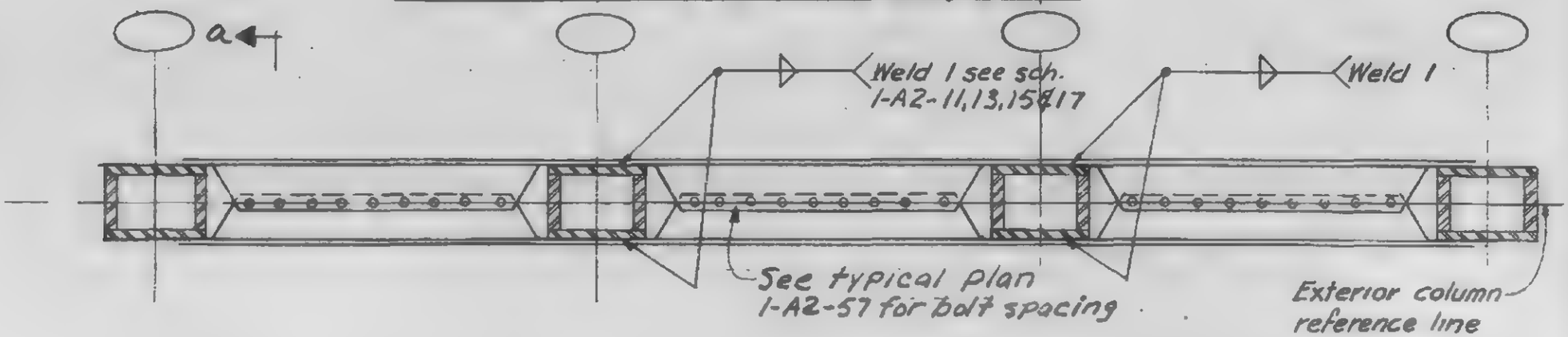

BRACING TYPE G 31, G32, G33

LICENSED PROFESSIONAL ENGINEER
LESLIE E. ROBERTSON
No. 34360
UNIVERSITY OF THE STATE OF NEW YORK

1-A2-56

WORTHINGTON, SKILLING, HELLE & JACKSON — Civil & Structural Engineers

PROJECT: THE WORLD TRADE CENTER | TITLE: EXT. WALL TO EL. 363' - BRACING TYPE G | DATE: 2-17-67

REVISIONS

3-15-67

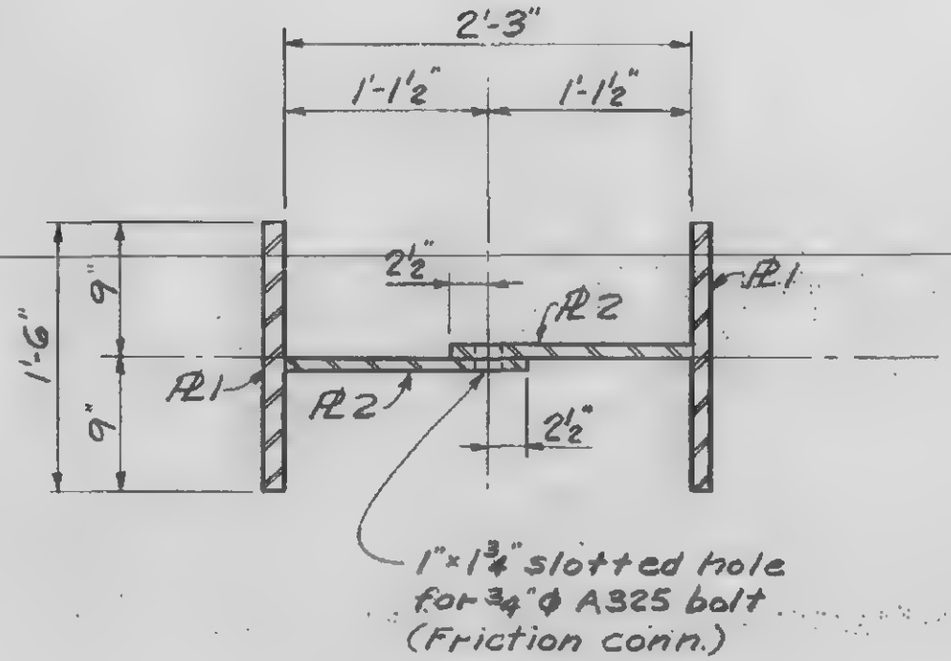

BRACING TYPE	PL 1	PL 2
G-11	1¼"	¾"
G 21	1¼"	¾"
G 22	1⅜"	¾"
G 23	1½"	¾"
G 31	1¼"	¾"
G 32	1⅜"	¾"
G 33	1½"	¾"

Section a-a

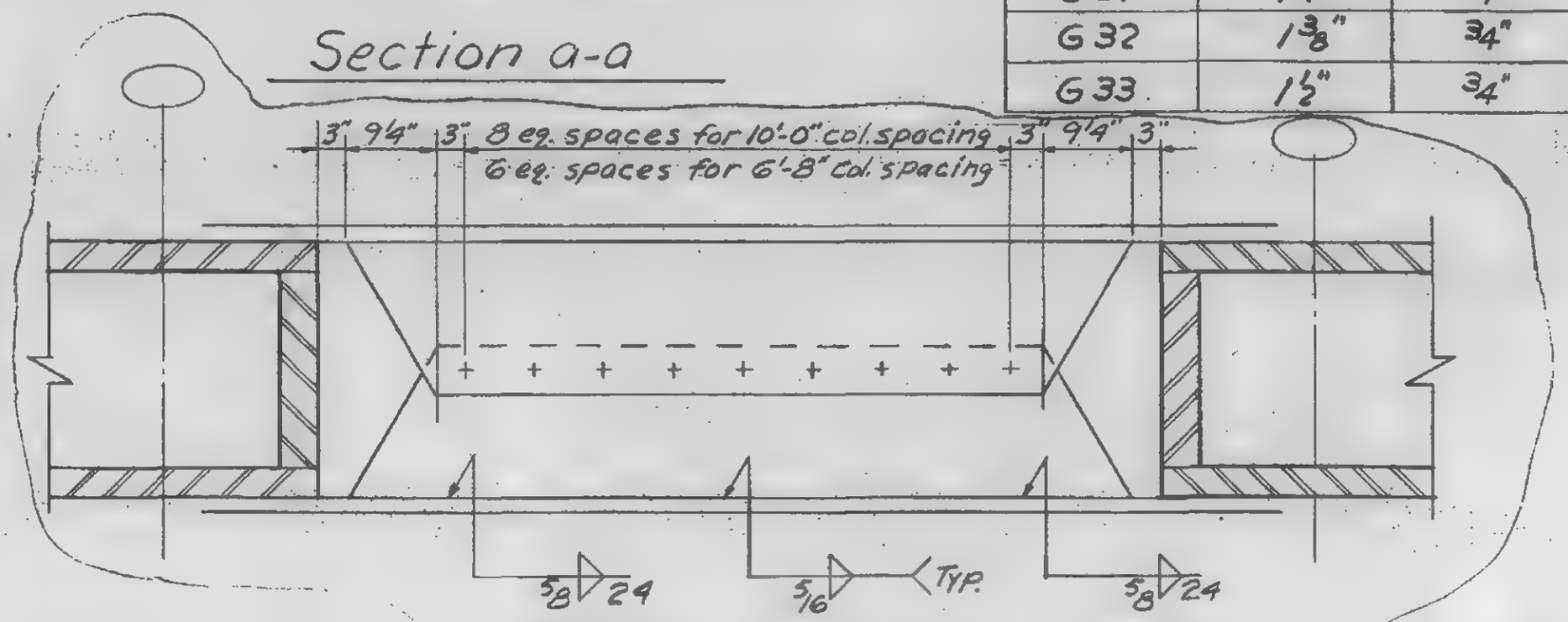

Typical plan

LICENSED PROFESSIONAL ENGINEER
LESLIE E. ROBERTSON
No. 34360
UNIVERSITY OF THE STATE OF NEW YORK

1-A2-57

WORTHINGTON, SKILLING, HELLE & JACKSON — Civil & Structural Engineers

PROJECT: THE WORLD TRADE CENTER | TITLE: EXTERIOR WALL TO EL. 363'-SPAND. EL. 350-BENDING DET. | DATE: 3-15-67

REVISIONS

4-24-67

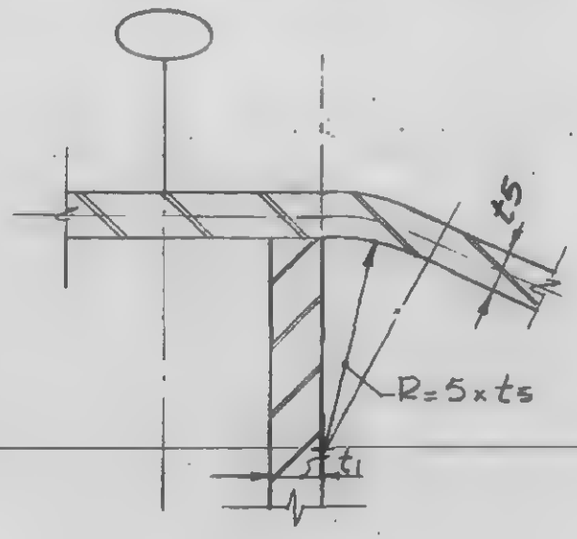

DETAIL AT TYPICAL COLUMN

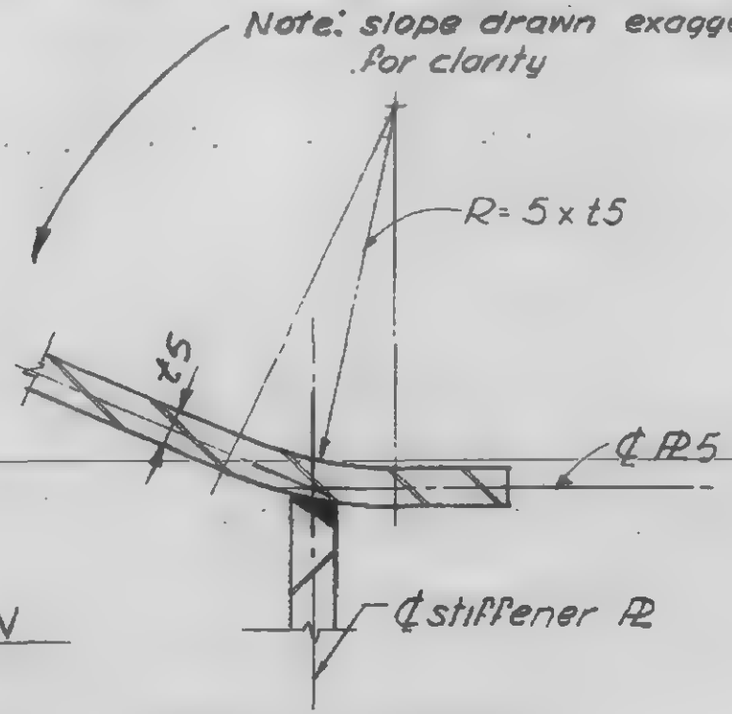

DETAIL AT TYPICAL SPANDREL SPLICE

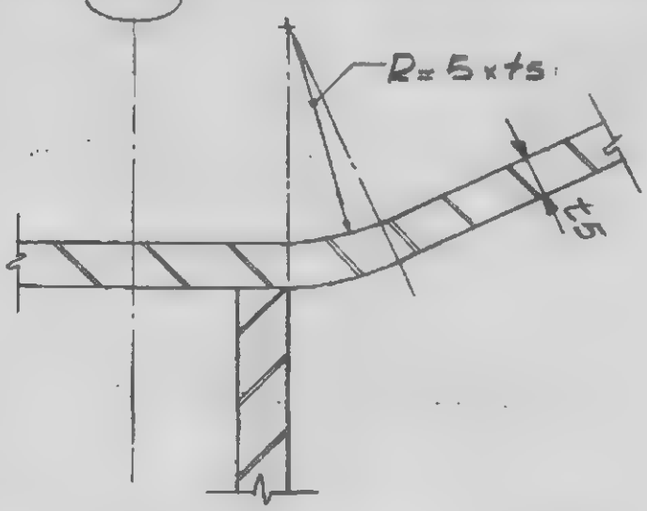

DETAIL AT COLUMNS 101, 159, 201, 259, 301, 359, 401, & 459.

LICENSED PROFESSIONAL ENGINEER
LESLIE E. ROBERTSON
No. 34360
UNIVERSITY OF THE STATE OF NEW YORK

1-A2-58

WORTHINGTON, SKILLING, HELLE & JACKSON — Civil & Structural Engineers

PROJECT THE WORLD TRADE CENTER | TITLE EXT. WALL TO EL. 363 - SPANDREL 350 - DETAIL # 5. | DATE 3-15-67

REVISIONS

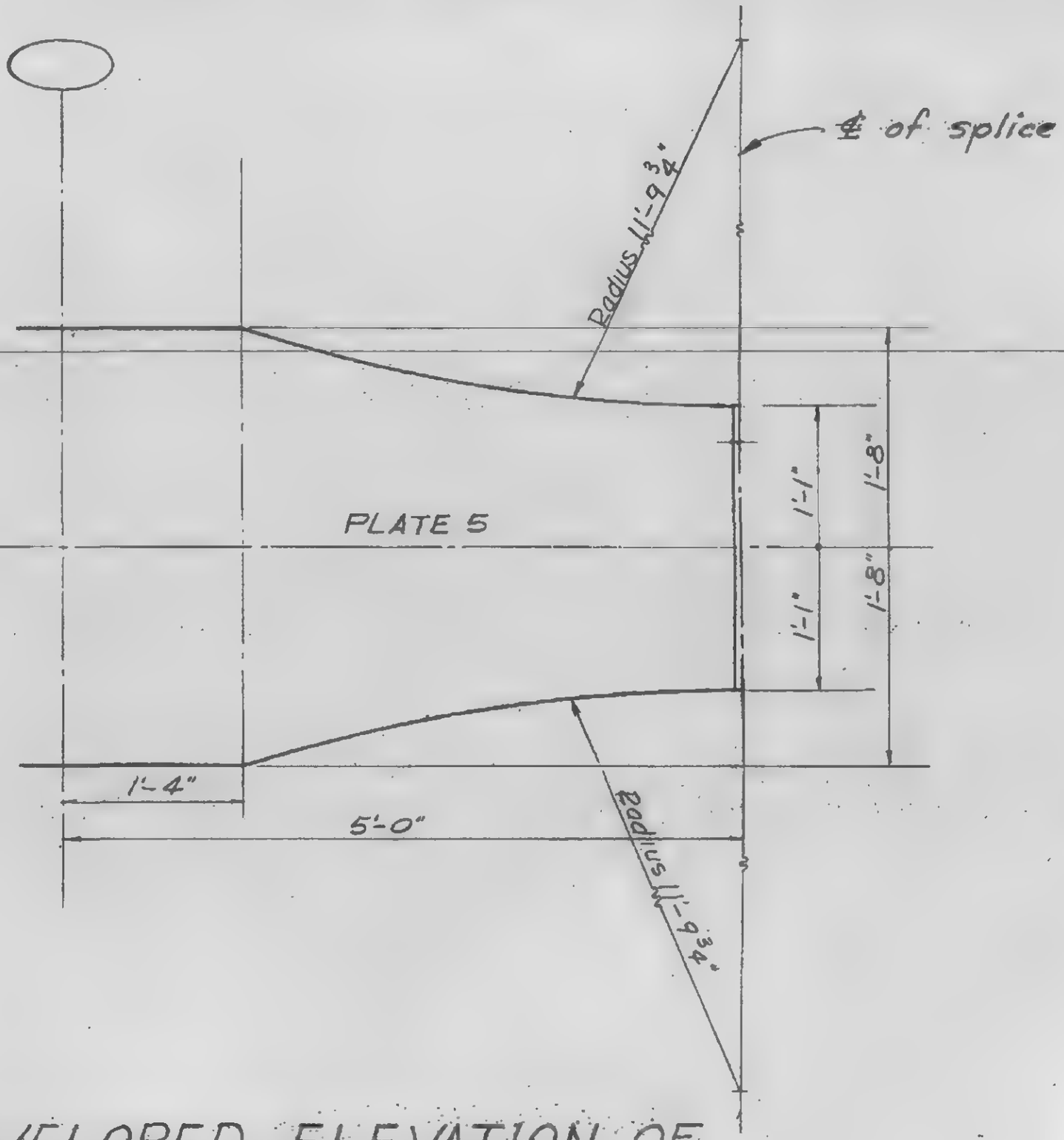

DEVELOPED ELEVATION OF PLATE 5

LICENSED PROFESSIONAL ENGINEER LESLIE E. ROBERTSON No. 34360 UNIVERSITY OF THE STATE OF NEW YORK

1-A2-59

WORTHINGTON, SKILLING, HELLE & JACKSON — Civil & Structural Engineers

PROJECT THE WORLD TRADE CENTER | TITLE EXT. WALL TO EL. 363'- DETAILS 1, 2 & 3 | DATE 3-15-67

REVISIONS

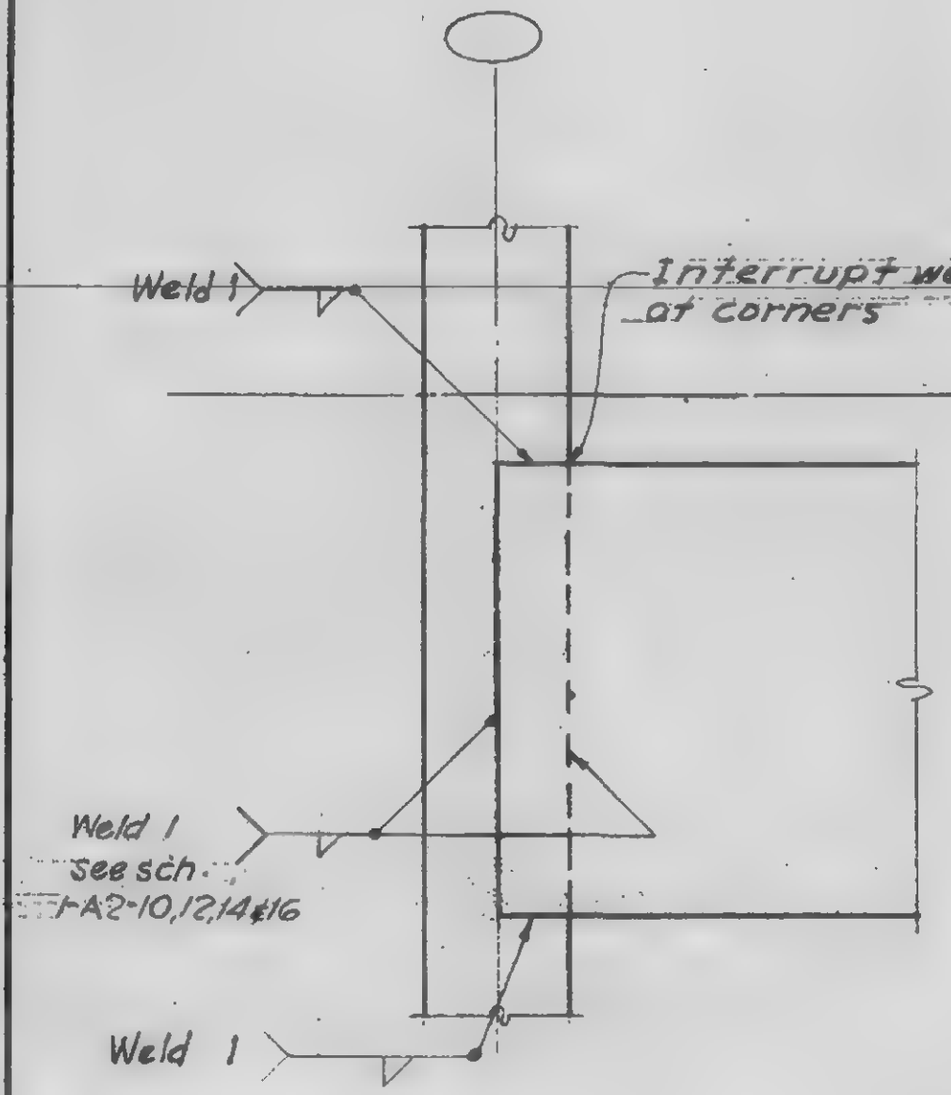

Detail 1
Detail 2 opp. hand

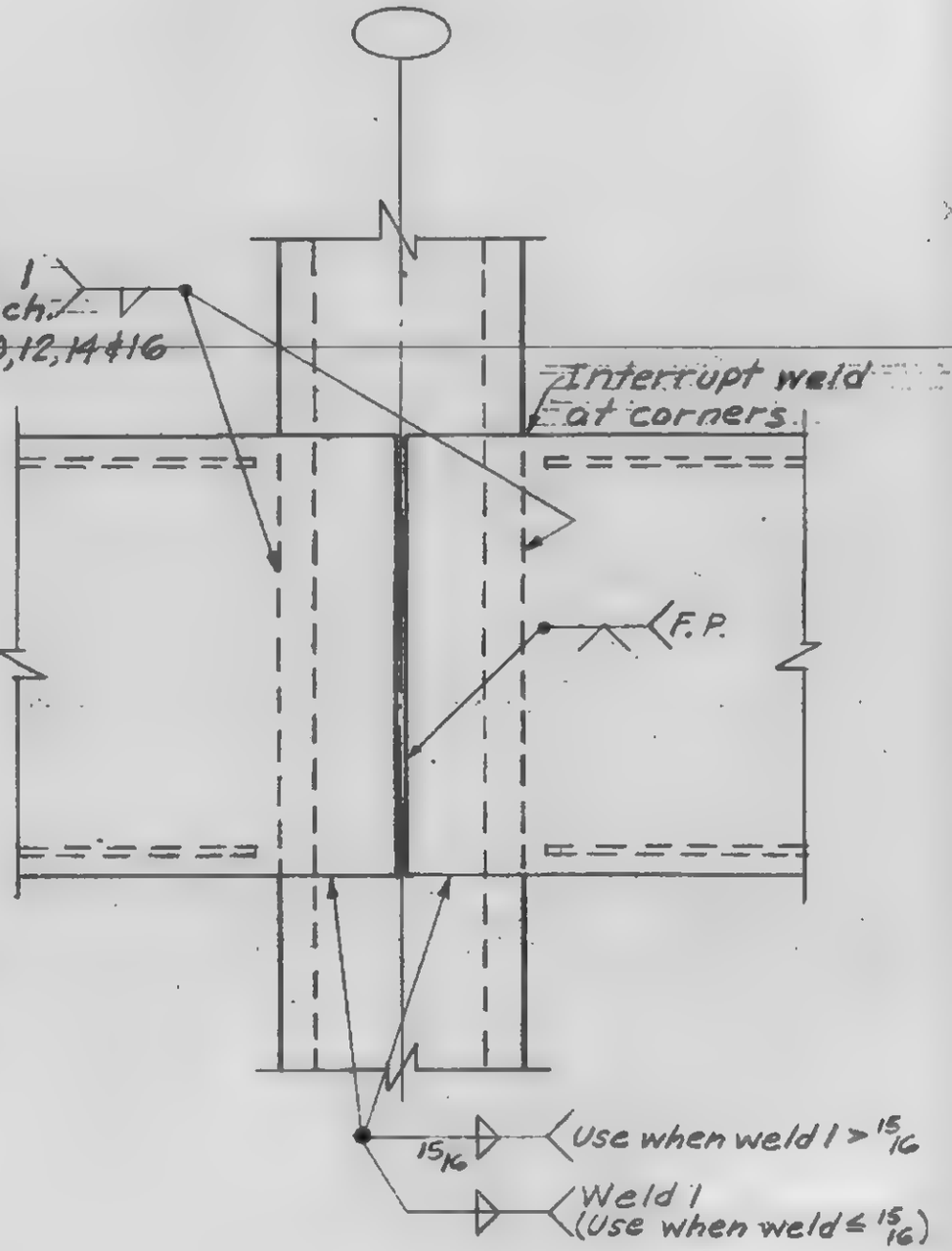

Detail 3

REGISTERED PROFESSIONAL ENGINEER
LESLIE E. ROBERTSON
No. 34360
STATE OF THE STATE OF NEW YORK

1-A2-60

WORTHINGTON, SKILLING, HELLE & JACKSON — Civil & Structural Engineers

PROJECT THE WORLD TRADE CENTER | TITLE EXT. WALL TO EL. 363'-DETAILS 4, 5 & 6 | DATE 3-15-67

REVISIONS

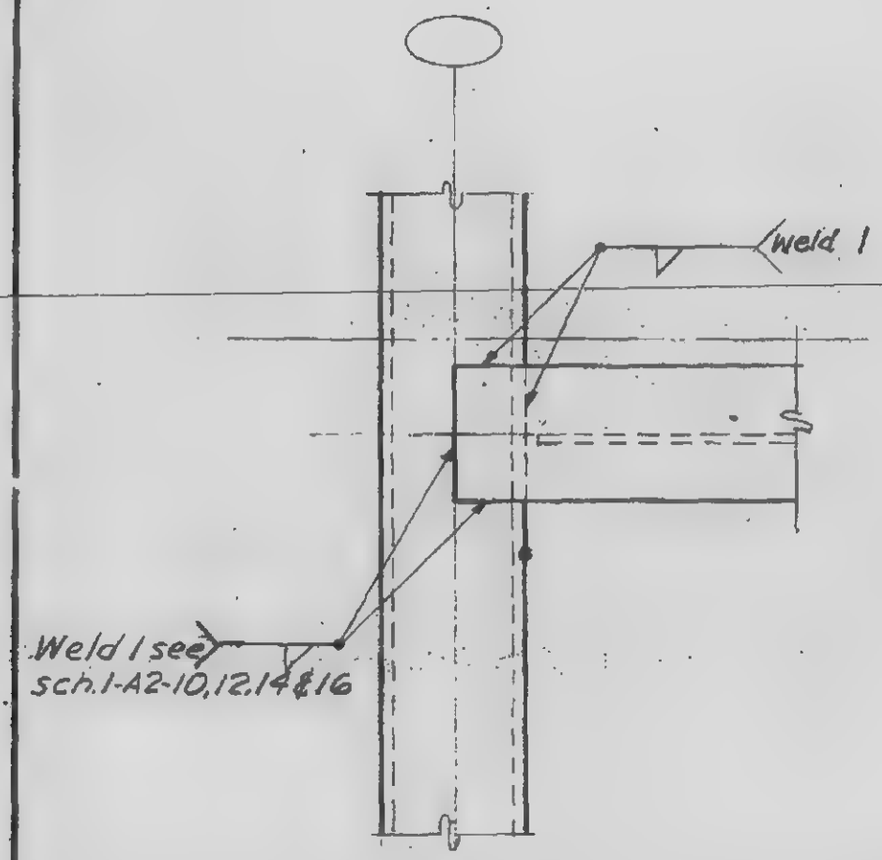

Detail 4
Detail 5 opp. hand

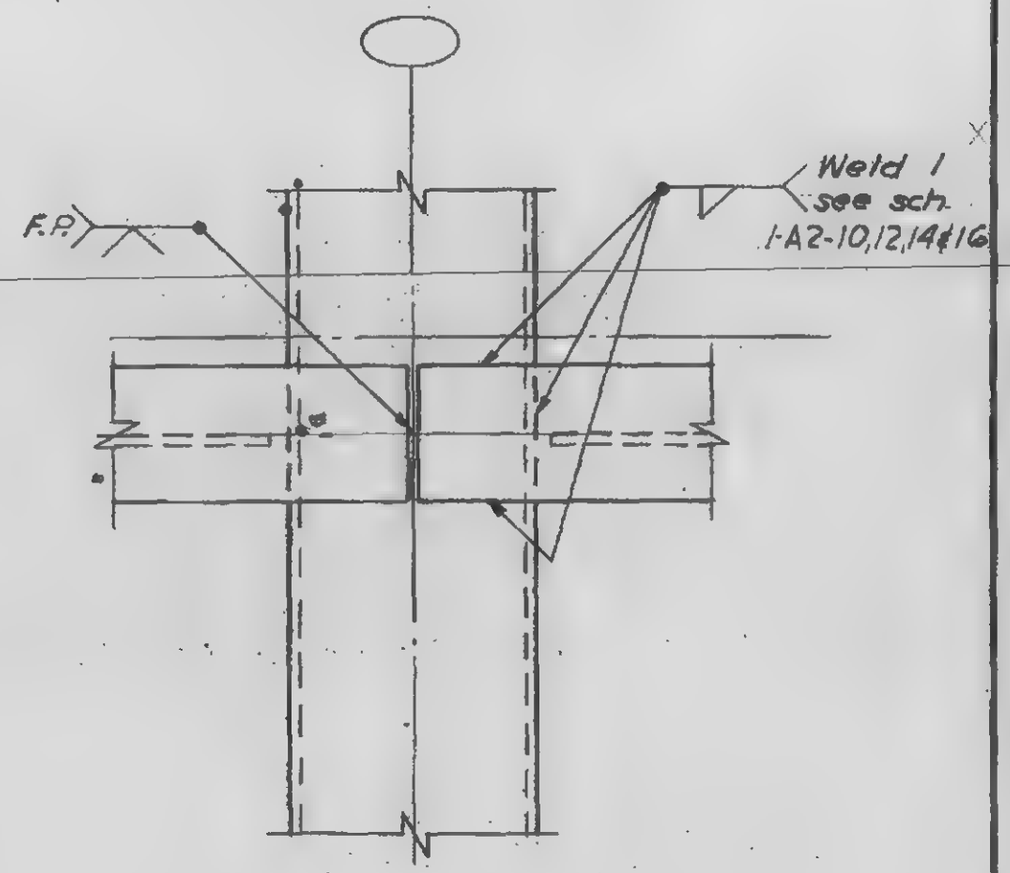

Detail 6

LICENSED PROFESSIONAL ENGINEER
LESLIE E. ROBERTSON
No. 34360
STATE OF THE STATE OF NEW YORK

1-A2-61

WORTHINGTON, SKILLING, HELLE & JACKSON — Civil & Structural Engineers

PROJECT THE WORLD TRADE CENTER | TITLE EXT. WALL TO EL. 363'-DETAILS 7, 8, 9 & 10 | DATE 3-15-67

REVISIONS

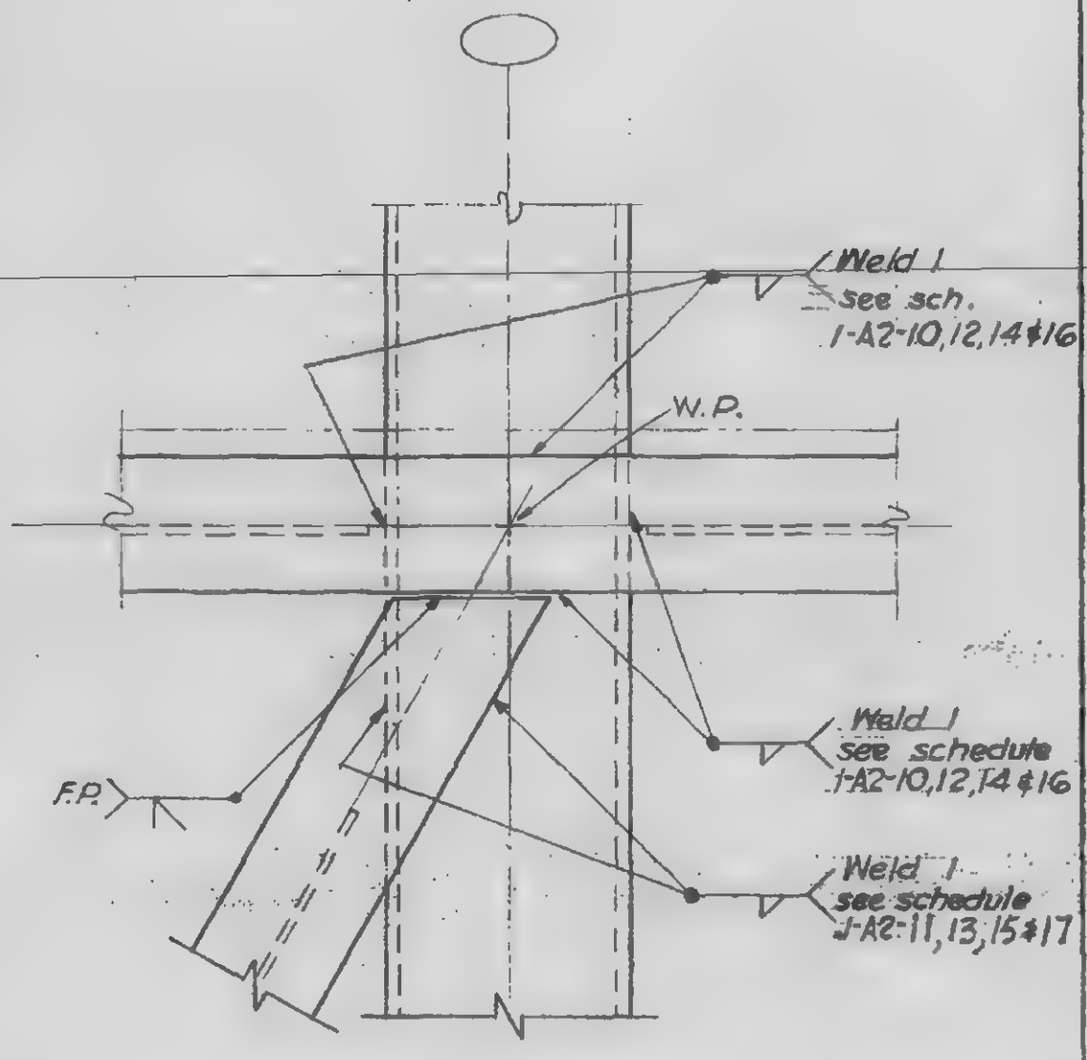

Detail 7
Detail 8 opp. hand

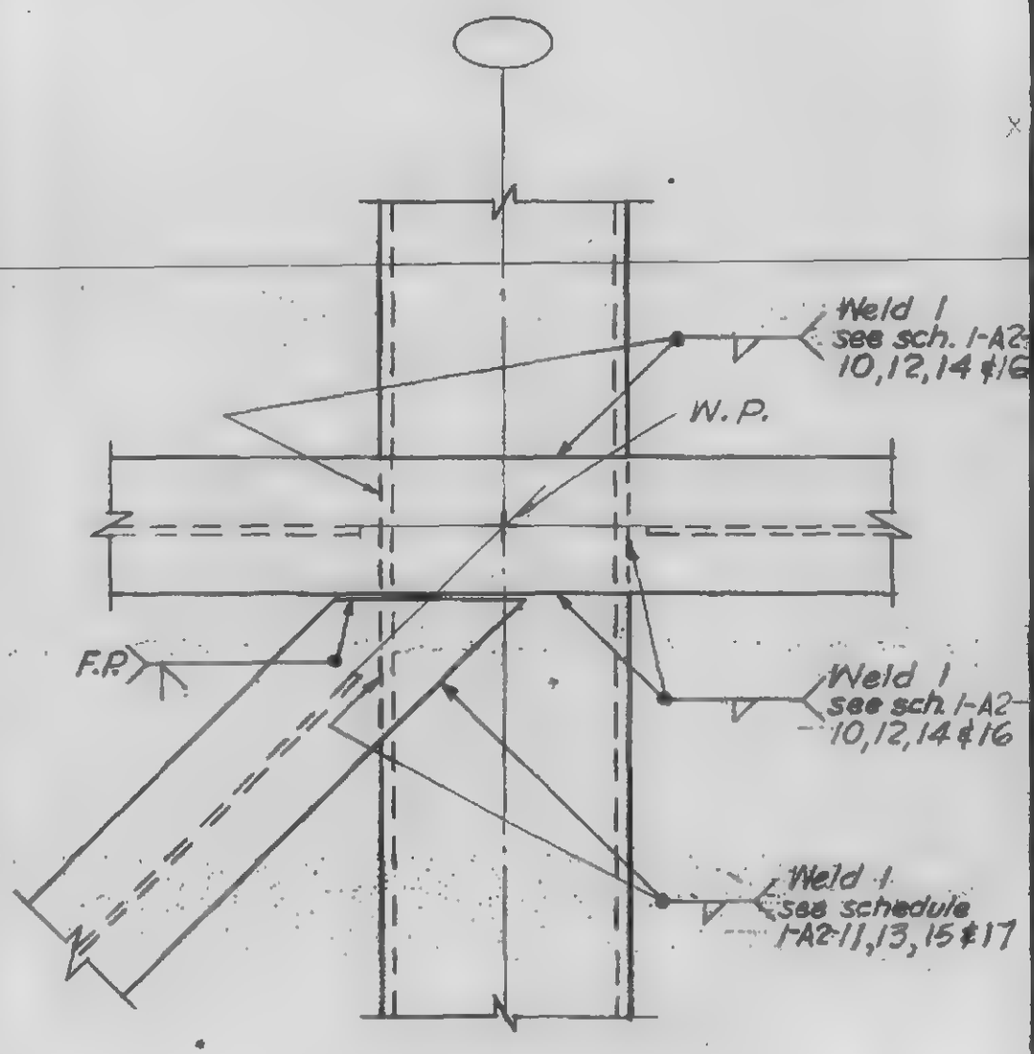

Detail 9
Detail 10 opp. hand

LICENSED PROFESSIONAL ENGINEER
LESLIE E. ROBERTSON
No. 34360
CITY OF THE STATE OF NEW YORK

1-A2-62

WORTHINGTON, SKILLING, HELLE & JACKSON — Civil & Structural Engineers

PROJECT: THE WORLD TRADE CENTER | TITLE: EXT. WALL TO EL. 363'-DETAILS 11, 12, 13 & 14 | DATE: 3-15-67

REVISIONS

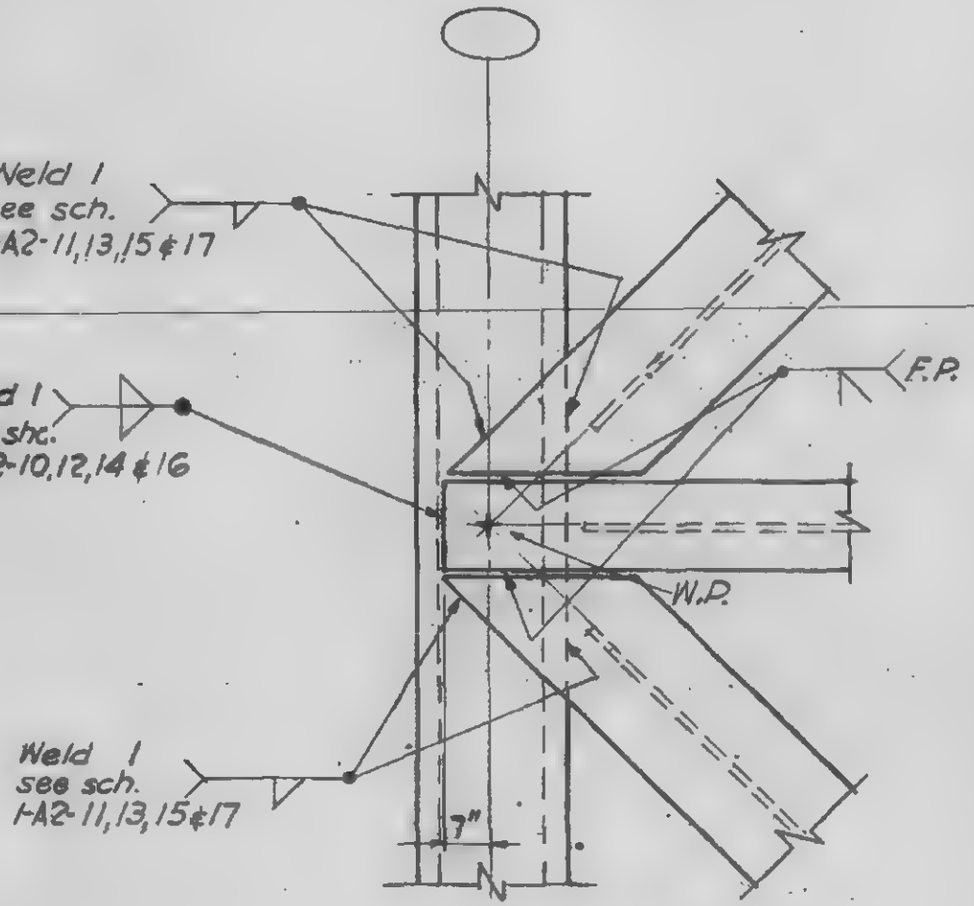

Detail 11
Detail 12 opp. hand

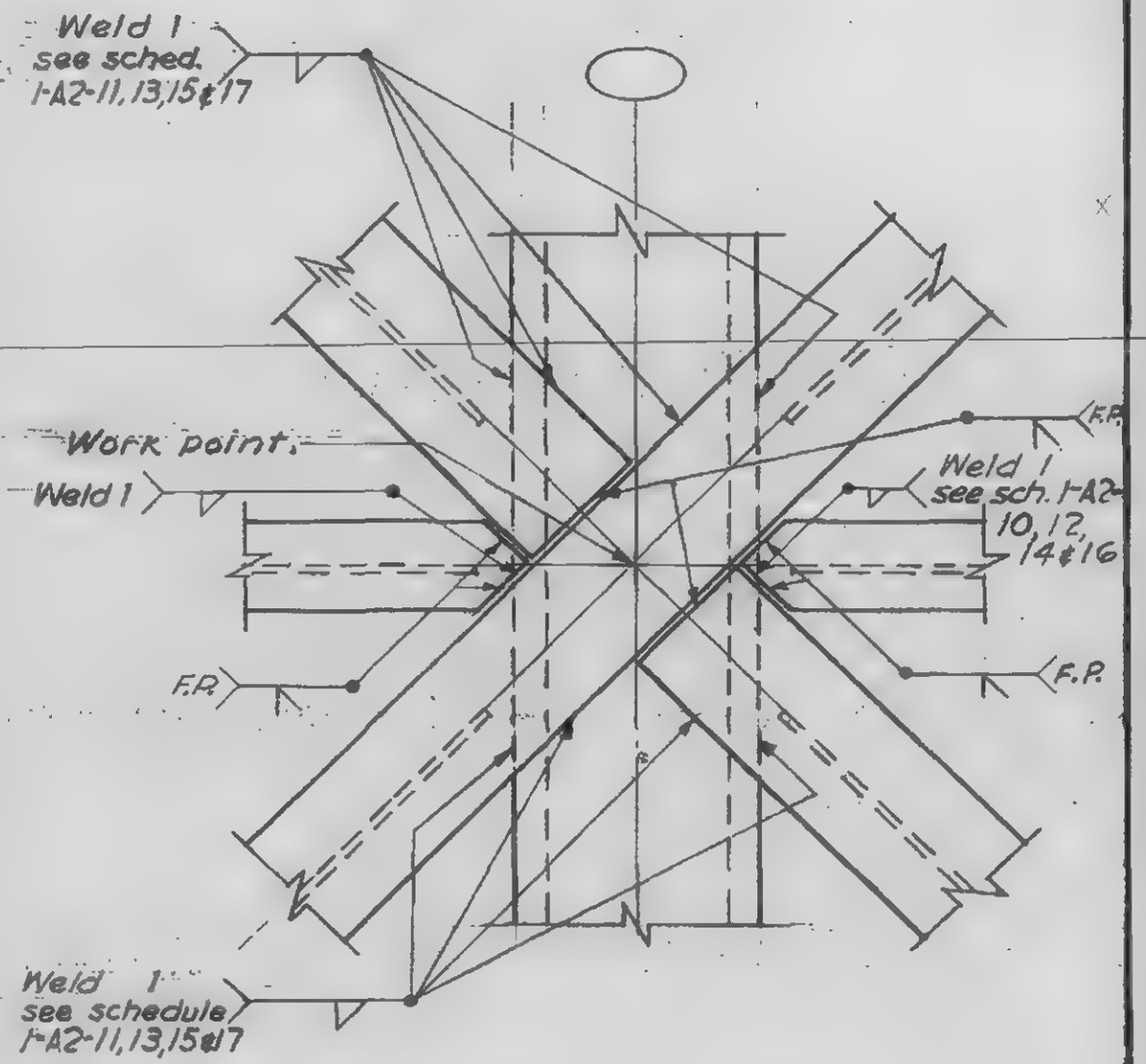

Detail 13
Detail 14 opp hand

LICENSED PROFESSIONAL ENGINEER
LESLIE E. ROBERTSON
No. 34360
OF THE STATE OF NEW YORK

1-A2-63

WORTHINGTON, SKILLING, HELLE & JACKSON — Civil & Structural Engineers

PROJECT THE WORLD TRADE CENTER | TITLE EXT. WALL TO EL.363'-DETAILS 15,16,17&18 | DATE 3-15-67

REVISIONS

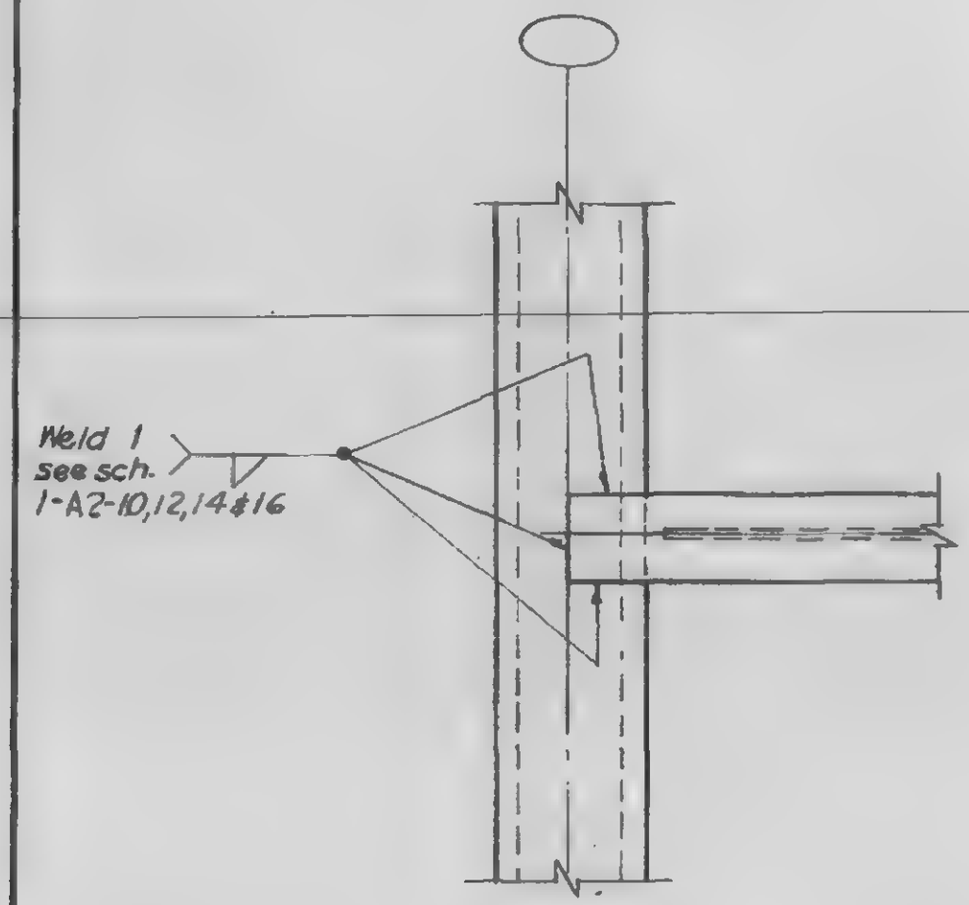

Detail 15
Detail 16 opp. hand

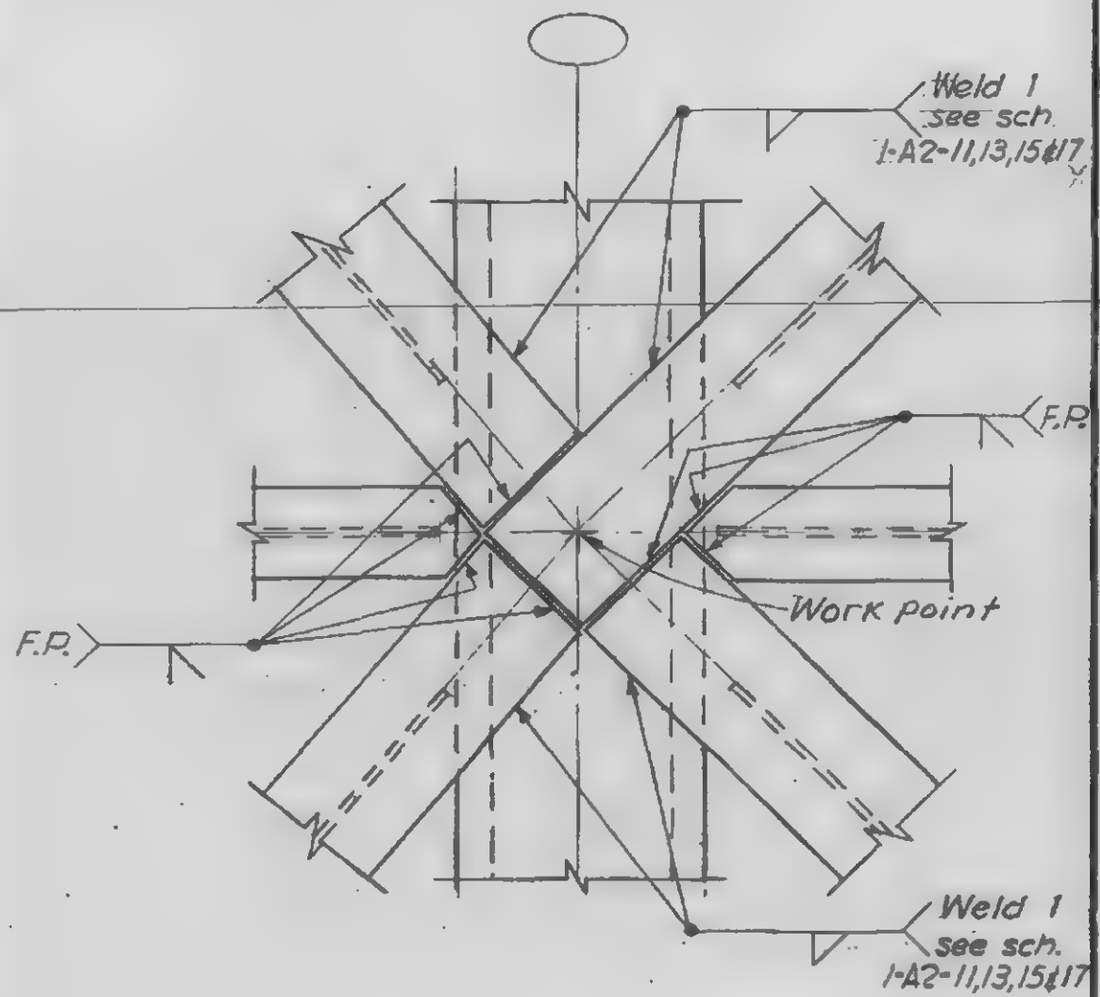

Detail 17
Detail 18 opp. hand

LESLIE E. ROBERTSON PROFESSIONAL ENGINEER No. 34360 STATE OF NEW YORK

1-A2-64

WORTHINGTON, SKILLING, HELLE & JACKSON — Civil & Structural Engineers

PROJECT THE WORLD TRADE CENTER | TITLE EXT. WALL TO EL. 363-DETAILS 19 & 20 | DATE 3-15-67

VISIONS

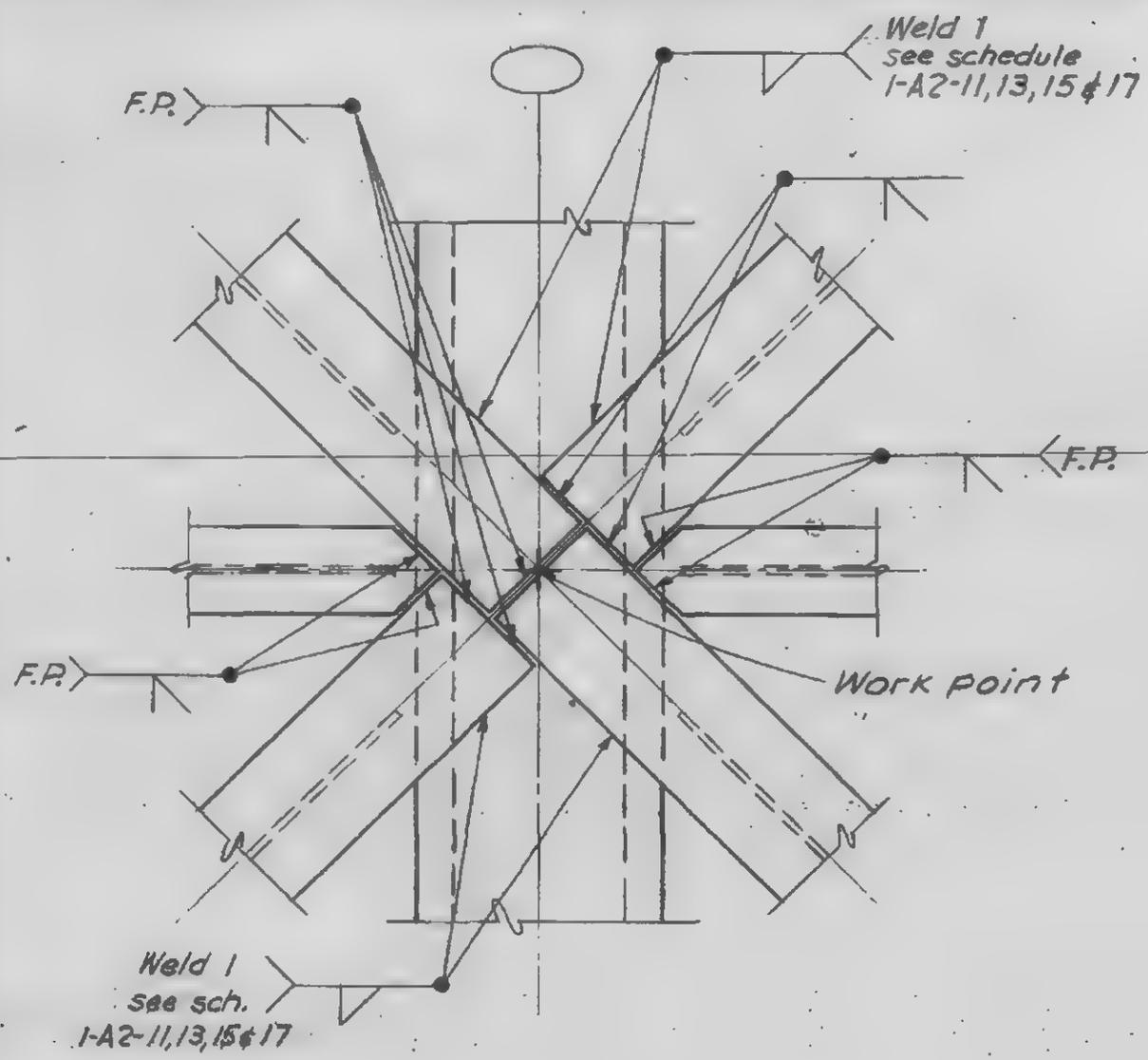

Detail 19

Detail 20, opp. hand

LICENSED PROFESSIONAL ENGINEER
LESLIE E. ROBERTSON
No. 34360
CITY OF THE STATE OF NEW YORK

1-A2-65

WORTHINGTON, SKILLING, HELLE & JACKSON — Civil & Structural Engineers

PROJECT THE WORLD TRADE CENTER | TITLE EXT. WALL TO EL. 363'-DETAILS 21, 22 & 23 | DATE 3-15-67

REVISIONS

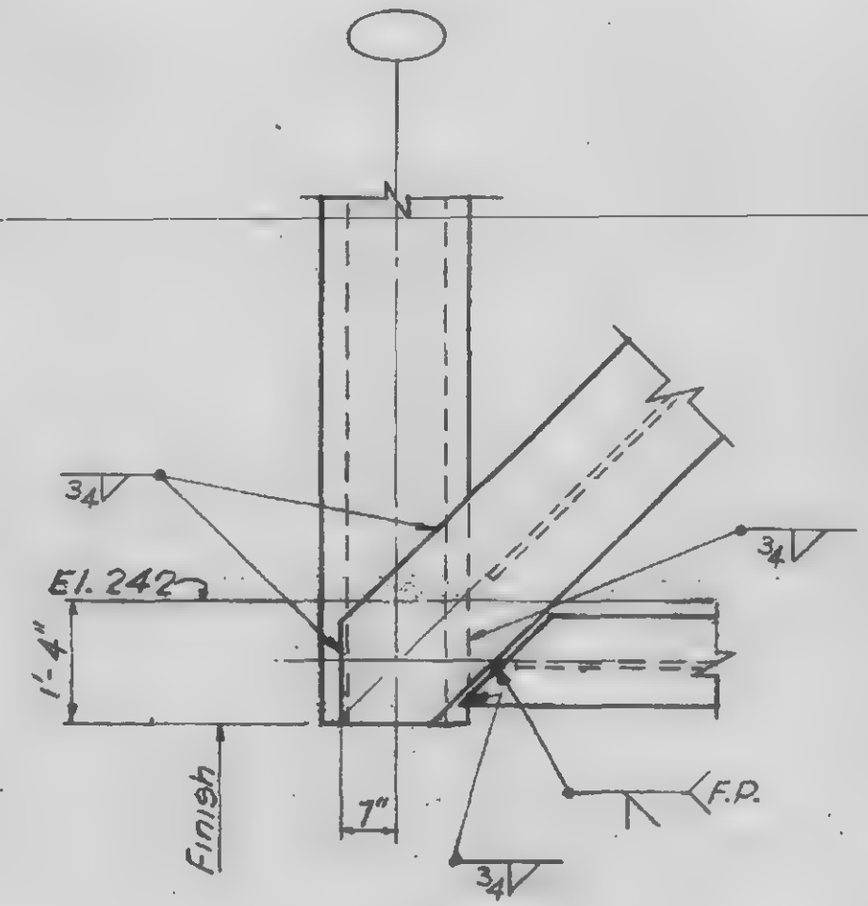

Detail 21
Detail 22 opp. hand

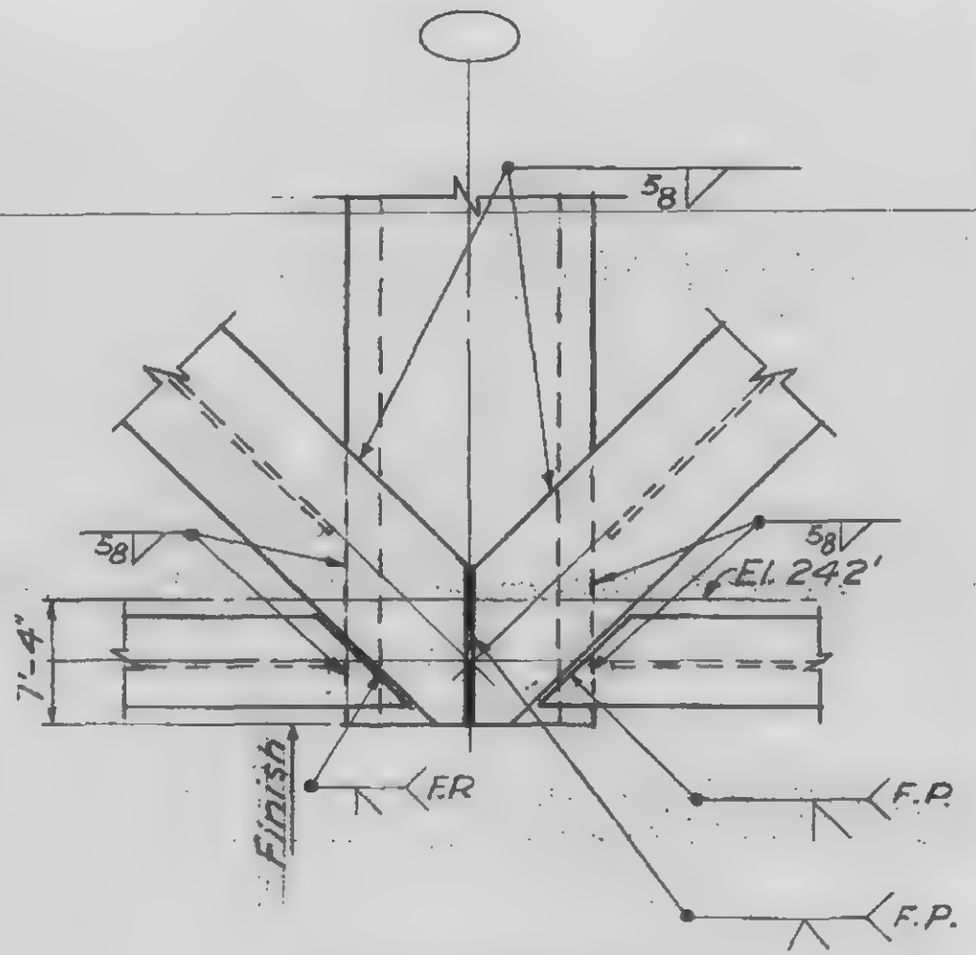

Detail 23

LICENSED PROFESSIONAL ENGINEER
LESLIE E. ROBERTSON
No. 34360
CITY OF THE STATE OF N.Y.

1-A2-66

WORTHINGTON, SKILLING, HELLE & JACKSON — Civil & Structural Engineers

PROJECT: THE WORLD TRADE CENTER | TITLE: EXTERIOR WALL TO EL. 363'- SPANDREL TYPE C | DATE: 5-8-67

REVISIONS

1-10-68

Note (1)
a) Use weld 1 (see sch 1-A2-10,12,14,16) when weld 1 ≤ 15/16"
b) Use 15/16" when weld 1 > 15/16"

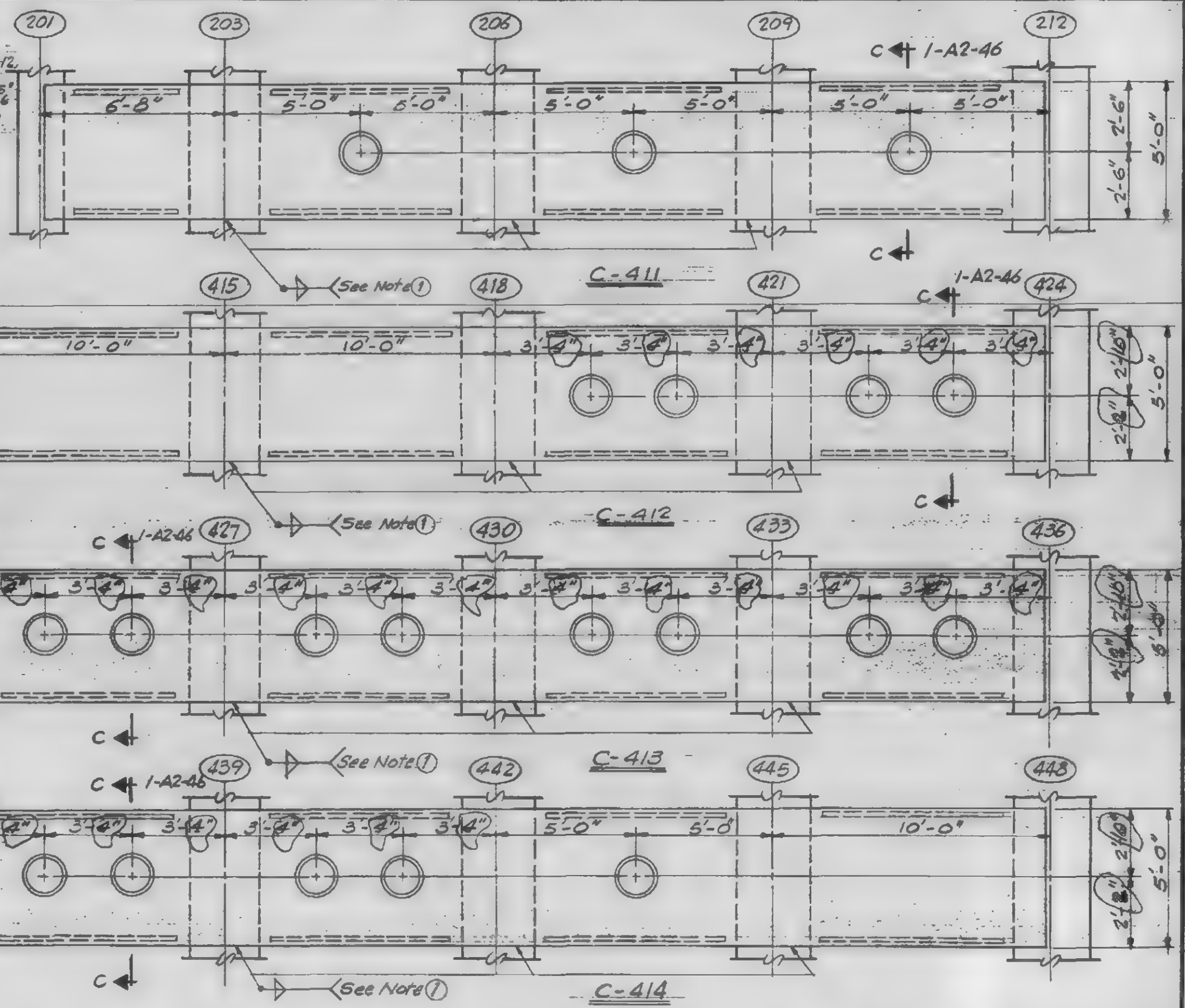

Elevations for Spandrel types C411, C412, C413, & C414

1-A2-67

LICENSED PROFESSIONAL ENGINEER
LESLIE E. ROBERTSON
No. 34360
STATE OF NEW YORK

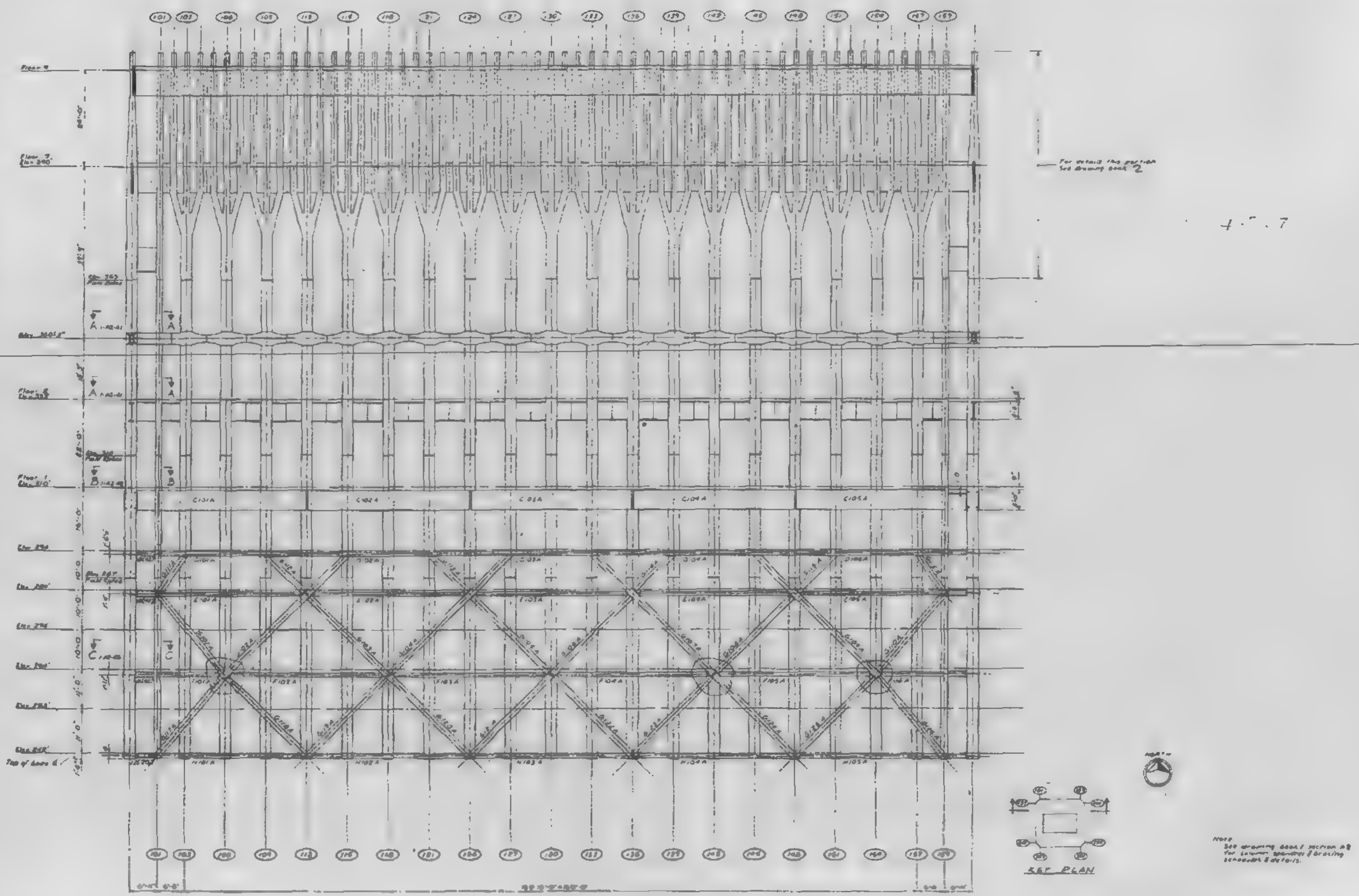

THE WORLD TRADE CENTER

THE PORT OF NEW YORK AUTHORITY

EXTERIOR WALL
TO FLOOR 9
ELEVATION WALL 100

SA-125

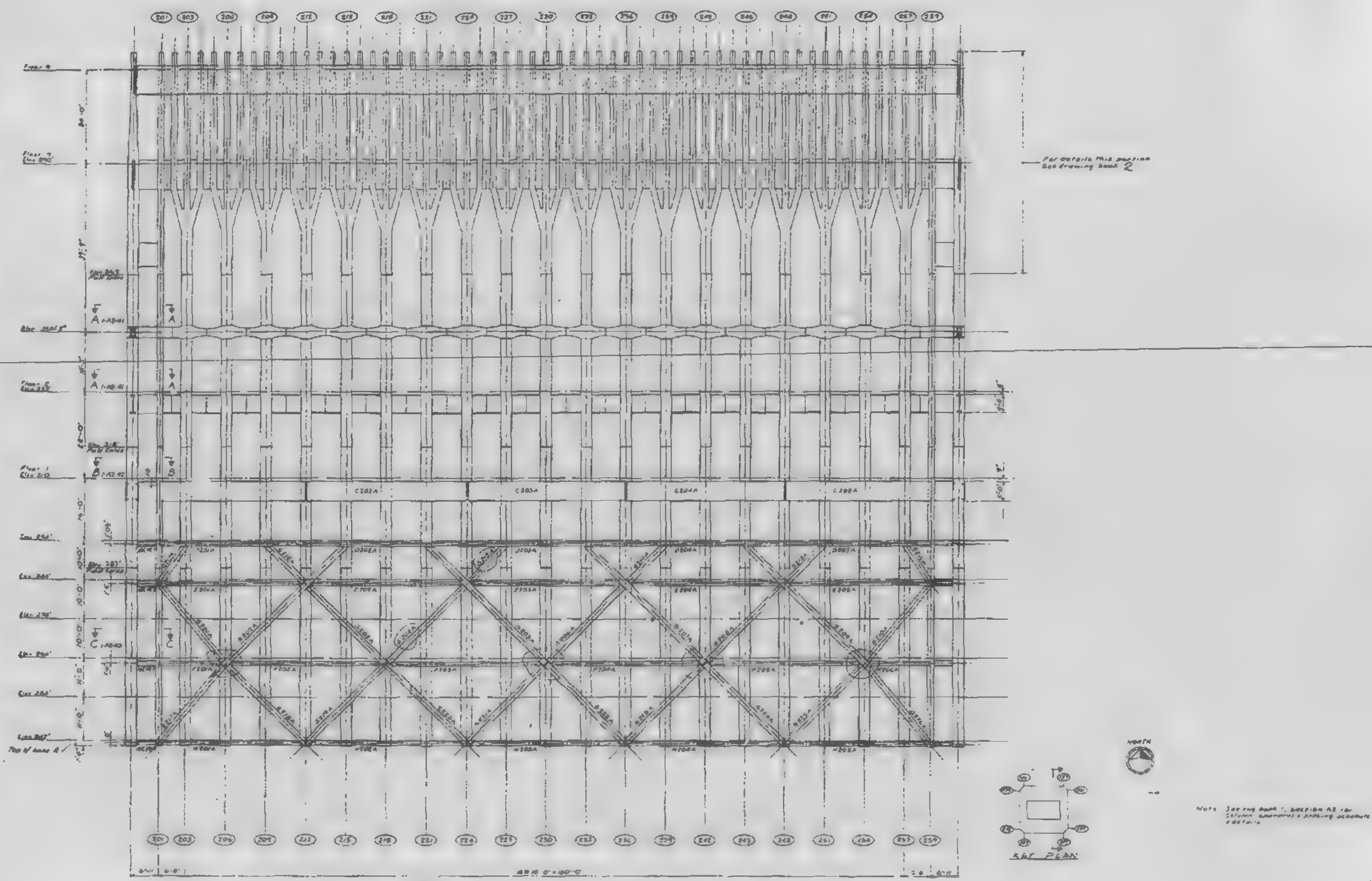

THE WORLD TRADE CENTER

THE PORT OF NEW YORK AUTHORITY

EXTERIOR WALL TO FLOOR 9 ELEVATION WALL 200

Scale: 1/8" = 1'-0"   Date: 9-12-66

SA-126

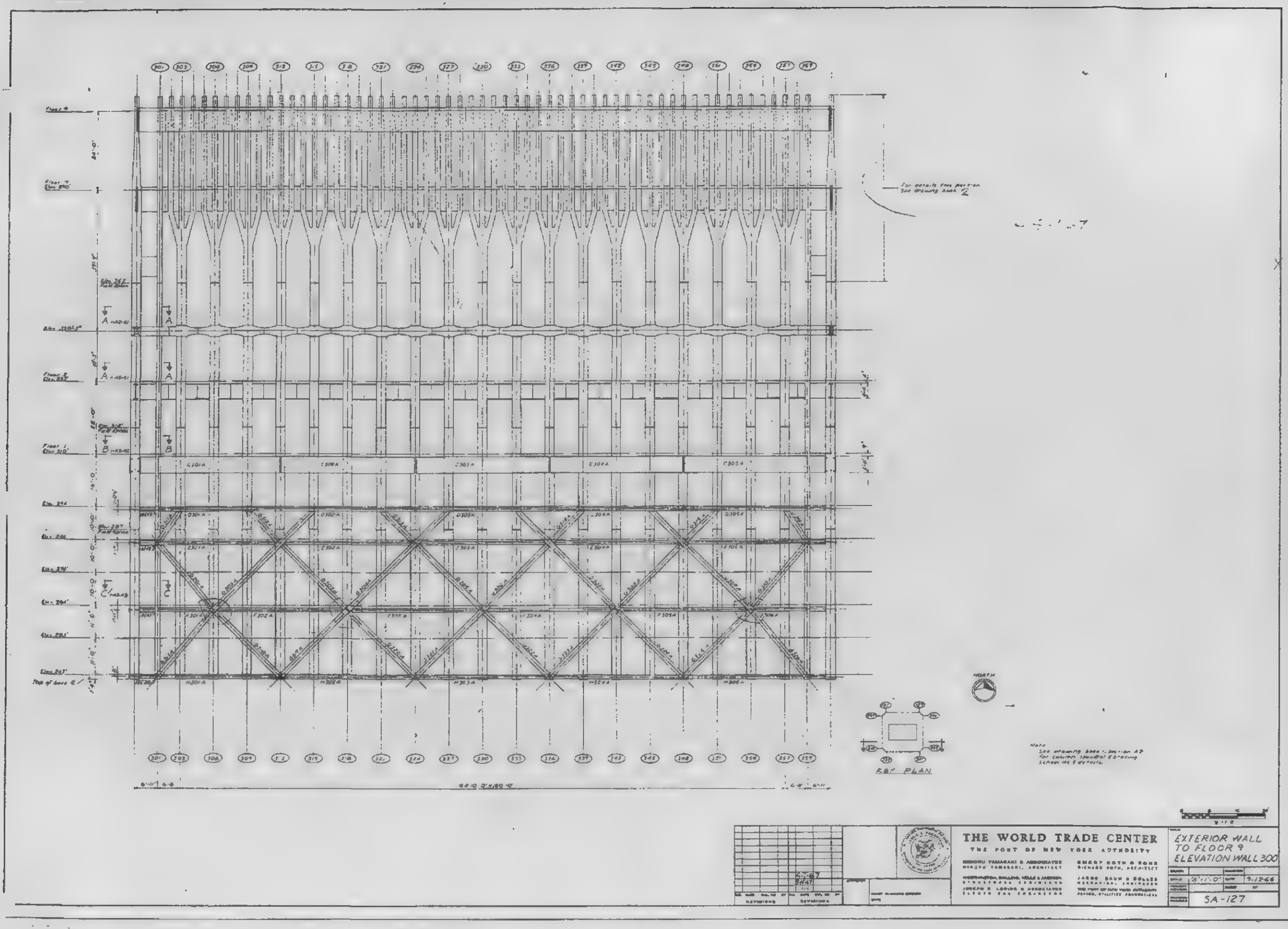

For details this portion See drawing book 2
KEY PLAN
NORTH
Note
See drawing book 1, Section A2 for column spandrel & bracing schedules & details.
THE WORLD TRADE CENTER
THE PORT OF NEW YORK AUTHORITY
MINORU YAMASAKI & ASSOCIATES
MINORU YAMASAKI, ARCHITECT
EMERY ROTH & SONS
RICHARD ROTH, ARCHITECT
JAROS, BAUM & BOLLES
MECHANICAL ENGINEERS
THE PORT OF NEW YORK AUTHORITY
PAVING, UTILITIES FOUNDATIONS
EXTERIOR WALL
TO FLOOR 9
ELEVATION WALL 300
9-12-66
SA-127

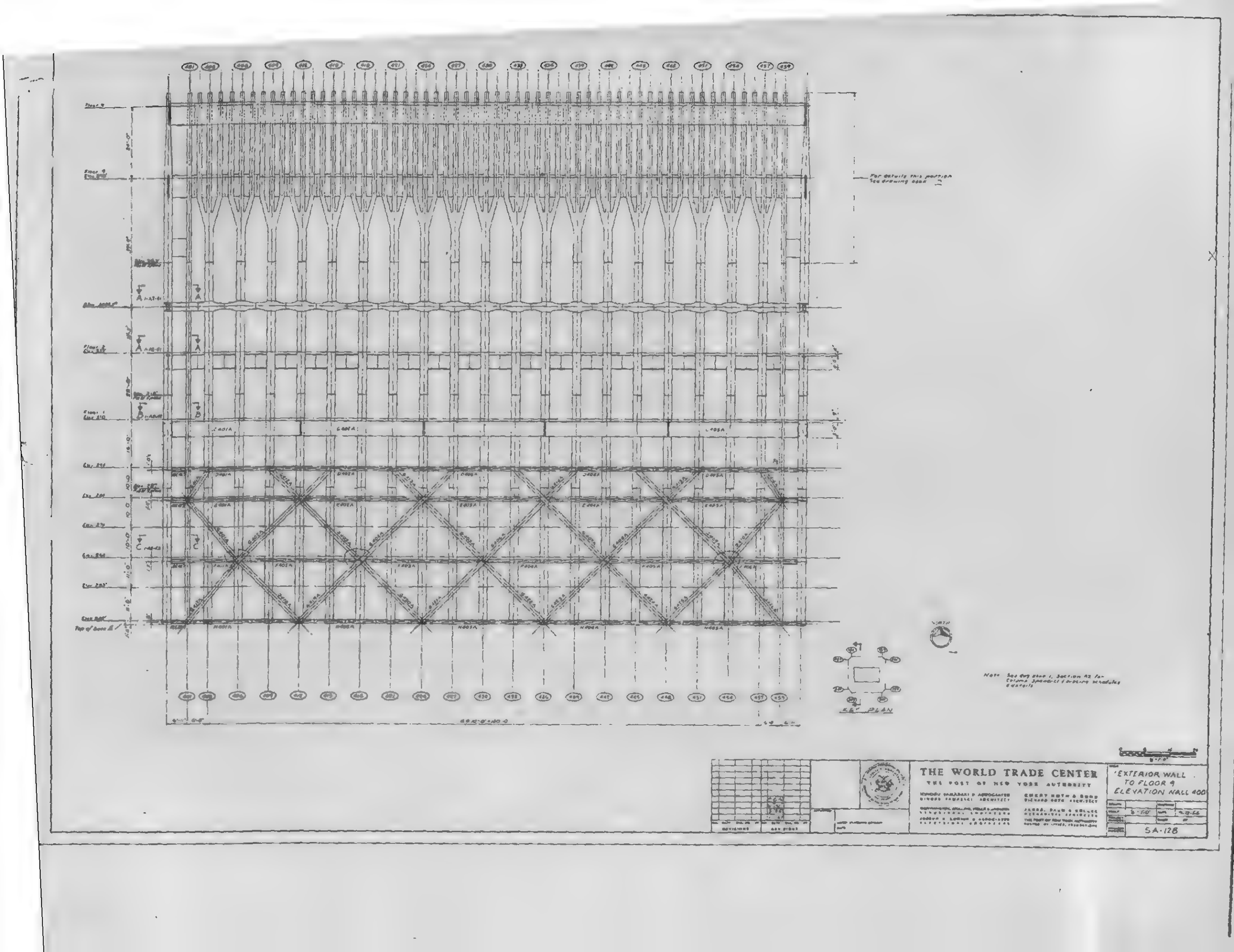

For details this portion See drawing book
KEY PLAN
NORTH
THE WORLD TRADE CENTER
THE PORT OF NEW YORK AUTHORITY
EXTERIOR WALL TO FLOOR 9 ELEVATION WALL 400
SA-128

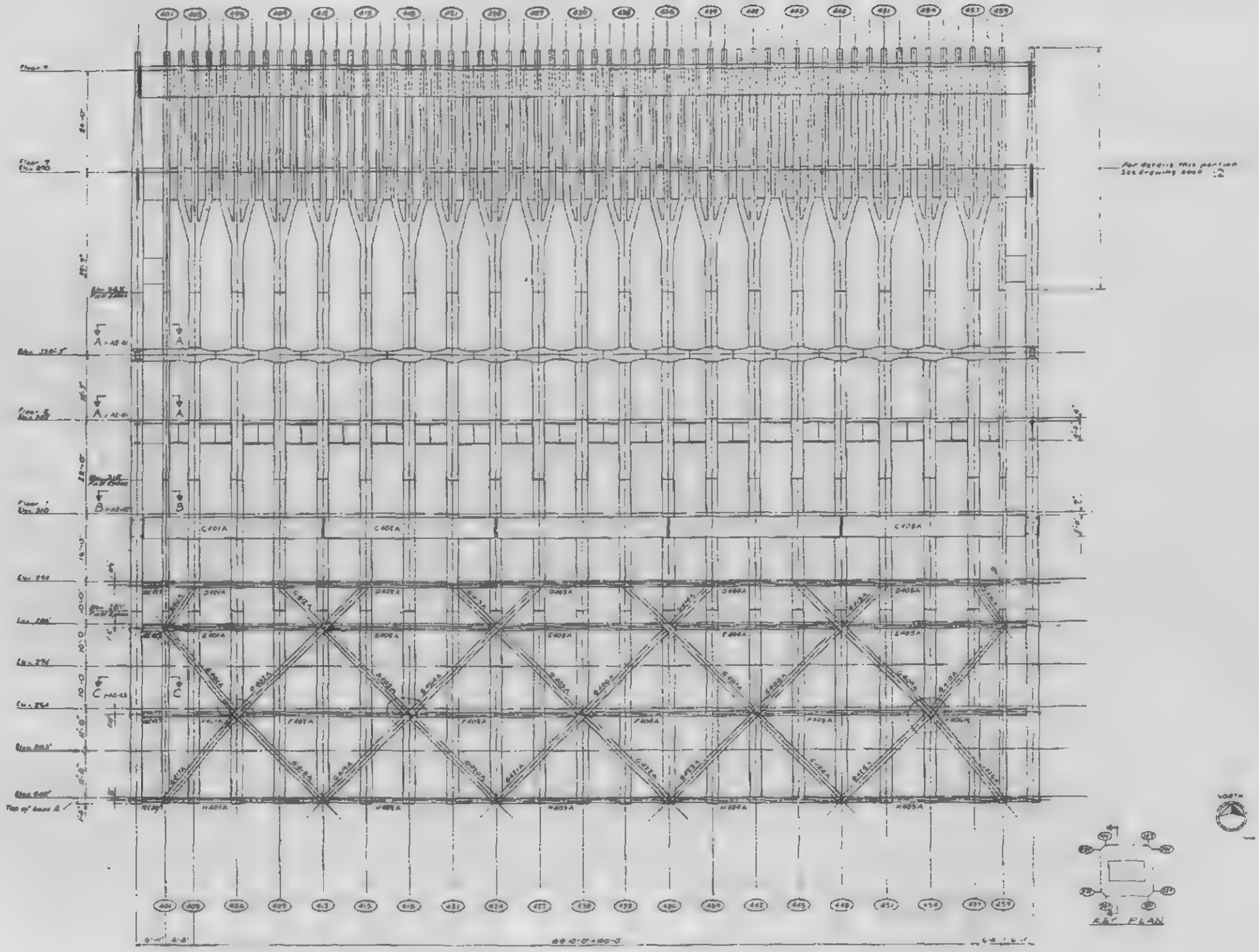

NORTH

Note: See drawing sheet 1 Section A1 for Column, Spandrel & bracing schedules & details

THE WORLD TRADE CENTER
THE PORT OF NEW YORK AUTHORITY

EXTERIOR WALL
TO FLOOR 9
ELEVATION WALL 400

SA-128

SKILLING, HELLE, CHRISTIANSEN, ROBERTSON — Structural & Civil Engineers

PROJECT: THE WORLD TRADE CENTER | TITLE: EXTERIOR WALL TO EL.363 - INDEX | DATE: 4/ 1/69

REVISIONS

Printed 5-1-69

1-B2- 1 COLUMN SCHEDULE - NOTES
1-B2- 2 COLUMN SCHEDULE
1-B2- 3 COLUMN SCHEDULE
1-B2- 4 COLUMN SCHEDULE
1-B2- 5 COLUMN SCHEDULE
1-B2- 6 COLUMN SCHEDULE - NOTES
1-B2- 7 COLUMN SCHEDULE
1-B2- 8 COLUMN SCHEDULE
1-B2- 9 SPANDREL, STRUT, BRACING SCHEDULE
1-B2-10 SPANDREL AND STRUT SCHEDULE
1-B2-11 BRACING SCHEDULE
1-B2-12 SPANDREL AND STRUT SCHEDULE
1-B2-13 BRACING SCHEDULE
1-B2-14 SPANDREL AND STRUT SCHEDULE
1-B2-15 BRACING SCHEDULE
1-B2-16 SPANDREL AND STRUT SCHEDULE
1-B2-17 BRACING SCHEDULE
1-B2-18 TRUSS SCHEDULE
1-B2-19 COLUMN TYPE 1000,8000,2000
1-B2-20 COLUMN TYPE 1000
1-B2-21 COLUMN TYPE 8000
1-B2-22 COLUMN TYPE 8000
1-B2-23 COLUMN TYPE 2000
1-B2-24 COLUMN TYPE 3000,4000
1-B2-25 COLUMN TYPE 3000
1-B2-26 COLUMN TYPE 4000
1-B2-27 COLUMN TYPE 5000,6000,7000
1-B2-28 COLUMN TYPE 5000
1-B2-29 COLUMN TYPE 5000
1-B2-30 COLUMN TYPE 5000
1-B2-31 COLUMN TYPE 6000
1-B2-32 COLUMN TYPE 6000
1-B2-33 COLUMN TYPE 6000
1-B2-34 COLUMN TYPE 7000
1-B2-35 COLUMN TYPE 7000
1-B2-36 COLUMN TYPE 7000
1-B2-37 COLUMN TYPE 7000
1-B2-38 COLUMN TYPE 7000
1-B2-39 SPANDREL EL.350 -BENDING DETAILS
1-B2-40 SPANDREL EL.350 -DETAIL PLATE 5
1-B2-41 COLUMN SLICE DETAIL 100
1-B2-42 COLUMN SLICE DETAIL 200
1-B2-43 COLUMN SLICE DETAIL 300
1-B2-44 COLUMN SLICE DETAIL 400
1-B2-45 COLUMN SLICE DETAIL 500
1-B2-46 COLUMN SLICE DETAIL 700
1-B2-47 SPANDREL SPLICE DETAIL A
1-B2-48 SPANDREL SPLICE DETAIL A
1-B2-49 SPANDREL SPLICE DETAIL A
1-B2-50 SPANDREL SPLICE DETAIL B
1-B2-51 SECTION A-A
1-B2-52 SECTION B-B
1-B2-53 SECTION C-C
1-B2-55 SPANDREL TYPE C
1-B2-56 SPANDREL TYPE C
1-B2-57 SPANDREL TYPE C
1-B2-58 STRUT TYPE D
1-B2-59 STRUT TYPE D
1-B2-60 STRUT TYPE E
1-B2-61 STRUT TYPE E
1-B2-62 STRUT TYPE F
1-B2-63 STRUT TYPE F
1-B2-64 STRUT TYPE H
1-B2-65 STRUT TYPE H
1-B2-66 BRACING TYPE G
1-B2-67 BRACING TYPE G
1-B2-68 TRUSS TYPE T
1-B2-69 DETAIL 1, 2, 3
1-B2-70 DETAIL 4, 5, 6
1-B2-71 DETAIL 7, 8, 9, 10
1-B2-72 DETAIL 11, 12, 13, 14
1-B2-73 DETAIL 15, 16, 17, 18
1-B2-74 DETAIL 19, 20
1-B2-75 DETAIL 21, 22, 23
1-B2-76 DETAIL 24, 25, 26, 27
1-B2-77 DETAIL 28, 29, 30, 31
1-B2-78 DETAIL 32, 33, 34, 35
1-B2-79 DETAIL 36, 37
1-B2-80 DETAIL 38, 39, 40, 41
1-B2-81 DETAIL 42, 43, 44
1-B2-82 DETAIL 45, 46, 47
1-B2-83 DETAIL 48, 49
1-B2-84 DETAIL 50, 51, 52, 53
1-B2-85 DETAIL 54, 55, 56, 57
1-B2-86 DETAIL 58, 59, 60, 61
1-B2-87 DETAIL 62, 63, 64
1-B2-88 DETAIL 65, 66, 67, 68
1-B2-89 DETAIL 69, 70, 71, 72
1-B2-90 DETAIL 73, 74
1-B2-91 DETAIL 75, 76, 77
1-B2-92 DETAIL 78, 79, 80
1-B2-93 DETAIL 81, 82,181,182
1-B2-94 DETAIL 83, 84
1-B2-95 DETAIL 85, 86, 87
1-B2-96 DETAIL 88, 89, 90
1-B2-97 DETAIL 91, 92, 93
1-B2-98 DETAIL 94, 95, 96, 97
1-B2-99 DETAIL 98, 99,100
1-B2-100 SPANDREL TYPE C
1-B2-101 SPANDREL TYPE C
1-B2-102 SPANDREL TYPE C

LICENSED PROFESSIONAL ENGINEER ☆ LESLIE E. ROBERTSON ☆ UNIVERSITY OF THE STATE OF NEW YORK No. 34360

S1

REVISIONS
2-19-68

COLUMN NUMBER	UPPER SPLICE ELEV.	LOWER SPLICE ELEV.	COLUMN TYPE	COLUMN FY1	COLUMN FY2	COLUMN UCS	COLUMN LCS	SEAT DETAILS EL.	SEAT DETAILS TWR	SEAT DETAILS PLZ	SEAT DETAILS EL.	SEAT DETAILS TWR	SEAT DETAILS PLZ	SEAT DETAILS EL.	SEAT DETAILS TWR	SEAT DETAILS PLZ	SEAT DETAILS EL.	SEAT DETAILS TWR	SEAT DETAILS PLZ	DETAIL TOP: PL 3 OR 4
(1)	(2)	(3)	(4)	(5)	(6)	(7)	(8)	(9)	(10)	(11)	(9)	(10)	(11)	(9)	(10)	(11)	(9)	(10)	(11)	(12)

NOTES -

(1) COLUMN NUMBER A INDICATES TOWER A B INDICATES TOWER B

(2) ELEVATION IN FEET OF UPPER COLUMN SPLICE

(3) ELEVATION IN FEET OF LOWER COLUMN SPLICE

(4) COLUMN TYPE - FOR DIMENSIONS , PLATE THICKNESS , AND WELDS SEE PAGES 1-B2-19 THRU 26

(5) REQUIRED YIELD STRENGTH FOR PLATE NO. 1 (KSI)

(6) REQUIRED YIELD STRENGTH FOR PLATE NO. 2 (KSI)

(7) DETAIL NUMBER FOR UPPER COLUMN SPLICE - SEE PAGES 1-B2-41 THRU 46

(8) DETAIL NUMBER FOR LOWER COLUMN SPLICE - SEE PAGES 1-B2-41 THRU 46

(9) REFERENCE ELEVATION FOR SEAT DETAILS INDICATED IN 10 AND 11

(10) DETAIL NUMBER FOR SEAT DETAIL ON TOWER FACE OF COLUMN - SEE PAGES 1-AB3-1 THRU 18 & 36 THRU 45

(11) DETAIL NUMBER FOR SEAT DETAIL ON PLAZA BUILDING FACE OF COLUMN - SEE PAGES 1-AB3-50 THRU 66

(12) DETAIL NUMBER WHERE TOP ELEVATION OF PLATE NO. 3 AND/OR 4 IS SHOWN - NOTE ALL PLATE NOS.3 AND 4 ARE FY = 36 KSI

SKILLING, HELLE, CHRISTIANSEN, ROBERTSON — **Structural & Civil Engineers**

PROJECT: THE WORLD TRADE CENTER | TITLE: EXTERIOR WALL TO EL.363 - COLUMN SCHEDULE | DATE: 3-31-67

REVISIONS
2-19-68
6-18-68

COLUMN NUMBER	UPPER SPLICE ELEV.	LOWER SPLICE ELEV.	COLUMN TYPE	FY1	FY2	UCS	LCS	SEAT DETAILS EL.	TWR	PLZ	EL.	TWR	PLZ	EL.	TWR	PLZ	EL.	TWR	PLZ	DETAIL TOP PL 3 OR 4
101B	287.00	240.67	1025	60	60	101		253	783A	-	264	738A	-	274	778A	P03H	284	771C	-	
101B	318.00	287.00	8003	50	50	501	101	294	759A	P08B	310	765A	P30B	-	-	-	-	-	-	
103B	287.00	240.67	2009	45	45	204		253	783A	-	264	780A	-	274	751M	P03C	284	774G	-	
103B	318.00	287.00	2009	50	50	702	204	294	760H	P08A	310	767A	P11T	-	-	-	-	-	-	
106B	287.00	240.67	2013	42	42	206		-	-	-	264	733A	-	274	752C	P03D	284	756H	-	
106B	318.00	287.00	2013	45	45	703	206	294	760B	P08A	310	767A	-	311	-	P40A	-	-	-	
109B	287.00	240.67	2016	36	36	208		-	-	-	264	735A	-	274	751B	P03C	284	756B	-	
109B	318.00	287.00	2016	45	45	704	208	294	760B	P08A	310	767A	-	313	-	P40B	-	-	-	
112B	287.00	240.67	2017	36	36	208		-	-	-	264	733A	-	274	752B	P03D	284	756B	-	
112B	318.00	287.00	2017	45	45	704	208	294	760B	P08A	310	767F	P11E	317	-	P40C	-	-	-	
115B	287.00	240.67	2017	36	36	208		253	771F	P01E	264	733A	-	274	751B	P03C	284	757B	-	
115B	318.00	287.00	2017	42	42	704	208	294	761B	P08A	310	767A	P11F	-	-	-	-	-	-	
118B	287.00	240.67	2017	36	36	208		253	-	P01D	264	733A	-	274	752B	P03D	284	756B	-	
118B	318.00	287.00	2017	42	42	704	208	294	760B	P08A	310	767A	P11G	-	-	-	-	-	-	
121B	287.00	240.67	2017	36	36	208		253	-	P01E	264	735A	-	274	751B	P03C	284	756B	-	
121B	318.00	287.00	2017	42	42	704	208	294	760B	P08A	310	767A	P11S	-	-	-	-	-	-	
124B	287.00	240.67	2017	36	36	208		253	-	P01D	264	733A	-	274	752B	P03D	284	756B	-	
124B	318.00	287.00	2017	42	42	704	208	294	760B	P08A	310	767F	P11H	-	-	-	-	-	-	
127B	287.00	240.67	2018	36	36	208		253	-	P01E	264	733A	-	274	751B	P03C	284	757B	-	
127B	318.00	287.00	2018	42	42	704	208	294	761B	P08A	310	767A	P11T	-	-	-	-	-	-	
130B	287.00	240.67	2019	36	36	208		253	-	P01D	264	733A	-	274	752B	P03D	284	756B	-	
130B	318.00	287.00	2019	42	42	704	208	294	760X	P08A	310	767C	P31G	-	-	-	-	-	-	
133B	287.00	240.67	2019	36	36	208		253	-	P01E	264	735A	-	274	751B	P03C	284	756B	-	
133B	318.00	287.00	2019	42	42	704	208	294	760B	P08A	310	767C	P11T	-	-	-	-	-	-	
136B	287.00	240.67	2019	36	36	208		253	-	P01D	264	733A	-	274	752B	P03D	284	756B	-	
136B	318.00	287.00	2019	42	42	704	208	294	760K	P08B	310	767G	P11H	-	-	-	-	-	-	
139B	290.00	240.67	4119	36	36	704		253	-	P01E	264	781B	-	274	751G	P03C	284	757B	-	78
139B	318.00	290.00	2019	42	42	704	704	294	751C	-	310	767C	P11R	-	-	-	-	-	-	
142B	-	-	-	-	-	-		-	-	-	-	-	-	-	-	-	284	757B	-	
142B	318.00	299.54	2020	45	45	705	81	-	-	-	310	767C	P11N	-	-	-	-	-	-	
145B	-	-	-	-	-	-		-	-	-	-	-	-	-	-	-	284	757B	-	
145B	318.00	299.54	2020	50	50	705	82	-	-	-	310	767C	P11P	-	-	-	-	-	-	
148B	290.00	240.67	4017	42	42	704		253	771E	P01E	264	781B	-	274	751H	P03C	284	757B	-	79
148B	318.00	290.00	2017	50	50	704	704	294	751C	-	310	766A	P11Q	-	-	-	-	-	-	
151B	287.00	240.67	2016	36	36	208		253	-	P01D	264	733A		274	752B	P03D	284	756B	-	
151B	318.00	287.00	2016	50	50	704	208	294	760M	P08B	310	767C	P11J	-	-	-	-	-	-	
154B	287.00	240.67	2013	42	42	206		253	-	P01E	264	734A	-	274	751B	P03C	284	756B	-	
154B	318.00	287.00	2013	50	50	703	206	294	760B	P08A	310	767C	P11K	-	-	-	-	-	-	
157B	287.00	240.67	2009	45	45	204		253	783B	-	264	733A	-	274	750B	P03D	284	756B	-	
157B	318.00	287.00	2009	50	50	702	204	294	760B	P08A	310	767A	P11M	-	-	-	-	-	-	
159B	287.00	240.67	1002	50	50	101	-	253	783B	-	264	738A	-	274	753D	-	284	758B	-	
159B	318.00	287.00	8003	50	50	501	101	294	759A	P08B	310	765A	P10B	-	-	-	-	-	-	

LICENSED PROFESSIONAL ENGINEER — LESLIE E. ROBERTSON — No. 34360 — UNIVERSITY OF THE STATE OF NEW YORK

X

SKILLING, HELLE, CHRISTIANSEN, ROBERTSON — Structural & Civil Engineers

PROJECT: THE WORLD TRADE CENTER | TITLE: EXTERIOR WALL TO EL.363 - COLUMN SCHEDULE | DATE: 3/31/67

REVISIONS
2-19-68
5-7-68
6-18-68
12-18-68

COLUMN NUMBER	UPPER SPLICE ELEV.	LOWER SPLICE ELEV.	COLUMN TYPE	FY1	FY2	UCS	LCS	SEAT DETAILS EL.	TWR	PLZ	EL.	TWR	PLZ	EL.	TWR	PLZ	EL.	TWR	PLZ	DETAIL TOP PL 3 OR 4
201B	287.00	240.67	1024	60	60	101		253	778B	-	264	738A	-	274	778A	P03K	284	771C	-	
201B	318.00	287.00	8023	50	50	501	101	294	771D	-	310	765A	P30C	-	-	-	-	-	-	
203B	287.00	240.67	2004	42	42	201		253	771G	-	264	736E	-	274	751N	P03A	284	774B	-	
203B	318.00	287.00	2004	50	50	701	201	294	760Q	-	310	770A	P11R	-	-	-	-	-	-	
206B	287.00	240.67	2005	42	42	201		253	752F	-	264	736I	-	274	779A	P03B	284	773A	-	
206B	318.00	287.00	2005	50	50	701	201	294	760E	-	310	770A	P11R	-	-	-	-	-	-	
209B	287.00	240.67	2005	42	42	201		-	-	-	264	735A	-	274	751R	P03A	284	756A	-	
209B	318.00	287.00	2005	50	50	701	201	294	760A	-	310	770A	P11R	-	-	-	-	-	-	
212B	287.00	240.67	2006	36	36	202		-	-	-	264	736A		274	752A	P03B	284	756A	-	
212B	318.00	287.00	2006	45	45	701	202	294	760A	-	310	770B	P11N	-	-	-	-	-	-	
215B	287.00	240.67	2007	36	36	203		-	-	-	264	736A	-	274	751A	P03A	284	757A	-	
215B	318.00	287.00	2007	45	45	701	203	294	760P	-	310	770A	P11R	-	-	-	-	-	-	
218B	287.00	240.67	2011	36	36	205		-	-	-	264	736A	-	274	752A	P03B	284	756A	-	
218B	318.00	287.00	2011	45	45	702	205	294	760A	-	310	770A	P11R	-	-	-	-	-	-	
221B	287.00	240.67	2010	36	36	205		-	-	-	264	735B	-	274	751B	P03A	284	756B	-	
221B	318.00	287.00	2010	45	45	702	205	294	760B	-	310	767B	P11R	-	-	-	-	-	-	
224B	287.00	240.67	2008	36	36	203		-	-	-	264	733B		274	752B	P03B	284	756B	-	
224B	318.00	287.00	2008	42	42	701	203	294	760D	-	310	772A	P11X	-	-	-	-	-	-	
227B	287.00	240.67	3208	42	42	203		-	-	-	264	736B	-	274	751E	P03A	284	774A	-	
227B	318.00	287.00	2008	42	42	701	203	294	761B	-	310	767B	P11R	-	-	-	-	-	-	
230B	-	-	-	-	-	-		-	-	-	264	736C	-	-	-	-	284	757B	-	
230B	318.00	283.25	2015	42	42	704	89	294	760B	-	310	770A	P11R	-	-	-	-	-	-	
233B	-	-	-	-	-	-		-	-	-	-	-	-	-	-	-	284	757B	-	
233B	318.00	283.25	2015	36	36	704	90	294	760B	-	310	767B	P11R	-	-	-	-	-	-	
236B	287.00	240.67	3208	36	36	203		-	-	-	264	736B	-	274	751E	P03A	284	774A	-	
236B	318.00	287.00	2008	42	42	701	203	294	760D	-	310	772A	P11N	-	-	-	-	-	-	
239B	287.00	240.67	2010	36	36	205		-	-	-	264	733B	-	274	752B	P03M	284	756B	-	
239B	318.00	287.00	2010	42	42	702	205	294	760B	-	310	767B	P11R	-	-	-	-	-	-	
242B	287.00	240.67	2022	36	36	302		-	-	-	264	780B	-	274	751B	P03A	284	774C	-	
242B	318.00	287.00	3311	42	42	702	302	294	751D	-	310	772B	P11N	-	-	-	-	-	-	
245B	-	-	-	-	-	-		-	-	-	-	-	-	274	752B	-	-	-	-	
245B	318.00	309.25	2014	36	36	704	93	-	-	-	310	772C	P11N	-	-	-	-	-	-	
248B	287.00	240.67	3012	36	36	303		-	-	-	264	736D	-	274	751B	P03A	284	774D	-	
248B	318.00	287.00	3106	42	42	701	303	294	760F	-	310	767C	P11V	-	-	-	-	-	-	
251B	-	-	-	-	-	-	-	-	-		-	-	-	-	-	-	284	757C	-	
251B	318.00	283.17	2011	42	42	702	98	294	760B	-	310	768C	P11R	-	-	-	-	-	-	
254B	287.00	240.67	3005	42	42	201		-	-	-	264	736D	-	274	751B	P03A	284	773B	-	
254B	318.00	287.00	2005	42	42	701	201	294	760B	-	310	768D	P11R	-	-	-	-	-	-	
257B	287.00	240.67	2004	42	42	201		-	-	-	264	733A	-	274	752E	P03B	284	756D	-	
257B	318.00	287.00	2004	45	45	701	201	294	760Y	-	310	767H	P11R	-	-	-	-	-	-	
259B	287.00	240.67	1001	45	45	101		-	-	-	264	736A	-	274	753D	P03F	284	758B	-	
259B	318.00	287.00	8023	45	45	501	101	294	771B	-	310	765A	P10C	-	-	-	-	-	-	

LICENSED PROFESSIONAL ENGINEER — LESLIE E. ROBERTSON — No. 34360 — UNIVERSITY OF THE STATE OF NEW YORK

SKILLING, HELLE, CHRISTIANSEN, ROBERTSON — Structural & Civil Engineers

PROJECT: THE WORLD TRADE CENTER | TITLE: EXTERIOR WALL TO EL.363 - COLUMN SCHEDULE | DATE: 3-31-67

REVISIONS
2-19-68
7-17-68
12-18-68

COLUMN NUMBER	UPPER SPLICE ELEV.	LOWER SPLICE ELEV.	COLUMN TYPE	FY1	FY2	UCS	LCS	SEAT DETAILS EL.	TWR	PLZ	EL.	TWR	PLZ	EL.	TWR	PLZ	EL.	TWR	PLZ	DETAI TOP P 3 OR
301B	287.00	240.67	1002	45	45	101		-	-	-	264	738A	-	274	753D	P03F	264	758A	-	
301B	318.00	287.00	8003	45	45	501	101	294	760S	P08B	310	770B	P11V	-	-	-	-	-	-	
303B	287.00	240.67	2009	45	45	204		-	-	-	264	736H	-	274	750C	P03G	284	756F	-	
303B	318.00	287.00	2009	45	45	702	204	294	760Q	P08A	310	770D	P31H	-	-	-	-	-	-	
306B	287.00	240.67	2013	42	42	206		-	-	-	264	737A	-	274	751A	P03A	284	756A	-	
306B	318.00	287.00	2013	45	45	703	206	294	760A	P08A	310	770A	P11R	-	-	-	-	-	-	
309B	287.00	240.67	2016	42	42	208		-	-	-	264	736A	-	274	752A	P03B	284	756A	-	X
309B	318.00	287.00	2016	45	45	704	208	294	760P	P08A	310	770A	P11R	-	-	-	-	-	-	
312B	287.00	240.67	4017	45	45	401		-	-	-	264	781A	-	274	751A	P03A	284	751K	-	
312B	318.00	287.00	4017	42	42	704	401	294	760R	P08A	310	770C	P11W	-	-	-	-	-	-	8
315B	318.00	309.17	2021	42	42	705	181	294	-	P08A	310	770A	P11Y	-	-	-	-	-	-	
318B	318.00	309.17	2021	36	36	705	182	294	-	P08A	310	770A	P11R	-	-	-	-	-	-	
321B	287.00	240.67	4017	36	36	401		-	-	-	264	781A	-	274	-	P03C	284	777A	-	
321B	318.00	287.00	4017	36	36	704	401	294	760T	P08A	310	770E	P11V	-	-	-	-	-	-	8
324B	287.00	240.67	2017	36	36	208		-	-	-	264	736A	-	274	752A	P03D	284	756A	-	
324B	318.00	287.00	2017	42	42	704	208	294	761B	P08A	310	767M	P11V	-	-	-	-	-	-	
327B	287.00	240.67	2018	36	36	208		-	-	-	264	735A	-	274	751A	P03C	284	756A	-	
327B	318.00	287.00	2018	42	42	704	208	294	760B	P08A	310	767D	P11R	-	-	-	-	-	-	
330B	287.00	240.67	2019	36	36	208		-	-	-	264	733C	-	274	752B	P03D	284	756B	-	
330B	318.00	287.00	2019	36	36	704	208	294	760G	P08A	310	767D	P11R	-	-	-	-	-	-	
333B	287.00	240.67	2019	36	36	208		-	-	-	264	733C	-	274	751B	P03C	284	757B	-	
333B	318.00	287.00	2019	36	36	704	208	294	761B	P08A	310	767C	P11R	-	-	-	-	-	-	
336B	287.00	240.67	2019	36	36	208		-	-	-	264	733C	-	274	752B	P03D	284	756B	-	
336B	318.00	287.00	2019	36	36	704	208	294	760B	P08A	310	767K	P11V	-	-	-	-	-	-	
339B	287.00	240.67	2019	36	36	208		-	-	-	264	735C	-	274	751B	P03C	284	756B	-	
339B	318.00	287.00	2019	36	36	704	208	294	760B	P08A	310	767D	P11R	-	-	-	-	-	-	
342B	287.00	240.67	2018	36	36	208		-	-	-	264	733C	-	274	752B	P03D	284	756B	-	
342B	318.00	287.00	2018	36	36	704	208	294	760B	P08A	310	767D	P11R	-	-	-	-	-	-	
345B	287.00	240.67	2017	36	36	208		-	-	-	264	733C	-	274	751B	P03C	284	757B	-	
345B	318.00	287.00	2017	36	36	704	208	294	761B	P08A	310	767D	P11R	-	-	-	-	-	-	
348B	287.00	240.67	2017	36	36	208		-	-	-	264	733C	-	274	752B	P03D	284	756B	-	
348B	318.00	287.00	2017	36	36	704	208	294	760B	P08A	310	767K	P11N	317	-	P40C	-	-	-	
351B	287.00	240.67	2016	36	36	208		-	-	-	264	735A	-	274	751B	P03C	284	756B	-	
351B	318.00	287.00	2016	36	36	704	208	294	760B	P08A	310	767C	P11R	313	-	P40B	-	-	-	
354B	287.00	240.67	2013	36	36	206		-	-	-	264	733D	-	274	752D	P03D	284	756G	-	
354B	318.00	287.00	2013	42	42	703	206	294	760N	P08A	310	767C	P11R	311	-	P40A	-	-	-	
357B	287.00	240.67	2009	42	42	204		-	-	-	264	780A	-	274	751B	P03C	284	774F	-	
357B	318.00	287.00	2009	42	42	702	204	294	761B	P08A	310	767C	P11T	-	-	-	-	-	-	
359B	287.00	240.67	1002	55	55	101		-	-	-	264	738A	-	274	778A	P03F	284	771B	-	
359B	318.00	287.00	8003	42	42	501	101	294	759A	P08B	310	765A	P10D	-	-	-	-	-	-	

LICENSED PROFESSIONAL ENGINEER — LESLIE E. ROBERTSON — No. 34360 — UNIVERSITY OF THE STATE OF NEW YORK

SKILLING, HELLE, CHRISTIANSEN, ROBERTSON — Structural & Civil Engineers

PROJECT: THE WORLD TRADE CENTER | TITLE: EXTERIOR WALL TO EL.363 - COLUMN SCHEDULE | DATE: 3-31-67

REVISIONS
2-19-68

COLUMN NUMBER	UPPER SPLICE ELEV.	LOWER SPLICE ELEV.	COLUMN TYPE	FY1	FY2	UCS	LCS	SEAT DETAILS EL.	TWR	PLZ	EL.	TWR	PLZ	EL.	TWR	PLZ	EL.	TWR	PLZ	DETAIL TOP PL 3 OR 4
401B	287.00	240.67	1001	42	42	101		-	-	-	264	736A	-	274	753D	P03E	284	758A	-	
401B	318.00	287.00	8023	42	42	501	101	294	759A	P08B	310	765A	P20D	-	-	-	-	-	-	
403B	287.00	240.67	2004	42	42	201		-	-	-	264	736A	-	274	752A	P03D	284	756A	-	
403B	318.00	287.00	2004	42	42	701	201	294	760A	P08A	310	770A	P18A	-	-	-	-	-	-	
406B	287.00	240.67	3005	36	36	201		-	-	-	264	736D	-	274	751F	P03C	284	774E	-	95
406B	318.00	287.00	2005	42	42	701	201	294	760A	P08A	310	770A	-	-	-	-	-	-	-	X
409B	-	-	-	-	-	-		-	-	-	-	-	-	-	-	-	284	757D	-	
409B	318.00	283.17	2011	36	36	702	98	294	760A	P08A	310	770A	-	-	-	-	-	-	-	
412B	287.00	240.67	3006	36	36	202		-	-	-	264	736D	-	274	751F	P03C	284	774E	-	97
412B	318.00	287.00	2006	42	42	701	202	294	761A	P08A	310	769A	P18B	-	-	-	-	-	-	
415B	287.00	240.67	2007	36	36	203		-	-	-	264	736A	-	274	752A	P03D	284	756A	-	
415B	318.00	287.00	2007	42	42	701	203	294	760A	P08A	310	770A	-	-	-	-	-	-	-	
418B	287.00	240.67	2011	36	36	205		-	-	-	264	735A	-	274	751A	P03C	284	756A	-	
418B	318.00	287.00	2011	42	42	702	205	294	760A	-	310	770A	P18E	-	-	-	-	-	-	
421B	287.00	240.67	2010	36	36	205		-	-	-	264	733B	-	274	752B	P03D	284	756B	-	
421B	318.00	287.00	2010	42	42	702	205	294	760B	-	310	767B	-	-	-	-	-	-	-	
424B	287.00	240.67	3208	36	36	203		-	-	-	264	736B	-	274	751E	P03C	284	774A	-	85
424B	318.00	287.00	2008	36	36	701	203	294	760W	P08A	310	767E	-	-	-	-	-	-	-	
427B	-	-	-	-	-	-		-	-	-	264	736F	-	-	-	-	284	757B	-	
427B	318.00	283.25	2015	36	36	704	89	294	760B	P08A	310	767B	P18F	-	-	-	-	-	-	
430B	-	-	-	-	-	-		-	-	-	-	-	-	-	-	-	284	757B	-	
430B	318.00	283.25	2015	42	42	704	90	294	760B	P08A	310	772A	-	-	-	-	-	-	-	
433B	287.00	240.67	3208	42	42	203		253	-	P01E	264	736B	-	274	751E	P03C	284	774A	-	86
433B	318.00	287.00	2008	50	50	701	203	294	760W	P08A	310	767A	-	-	-	-	-	-	-	
436B	287.00	240.67	2008	36	36	203		253	-	P01D	264	733B	-	274	752B	P03D	284	756B	-	
436B	318.00	287.00	2008	50	50	701	203	294	760B	P08A	310	772A	P18C	-	-	-	-	-	-	
439B	287.00	240.67	2010	36	36	205		253	-	P01E	264	735B	-	274	751B	P03C	284	756B	-	
439B	318.00	287.00	2010	50	50	702	205	294	760B	P08A	310	767B	-	-	-	-	-	-	-	
442B	287.00	240.67	2011	36	36	205		253	752G	P01D	264	733A	-	274	752A	P03D	284	756A	-	
442B	318.00	287.00	2011	50	50	702	205	294	760A	P08A	310	770A	-	-	-	-	-	-	-	
445B	287.00	240.67	2007	36	36	203		253	751P	P01E	264	736A	-	274	751A	P03C	284	757A	-	
445B	318.00	287.00	2007	50	50	701	203	294	760Y	P08A	310	770A	P18D	-	-	-	-	-	-	
448B	287.00	240.67	2006	42	42	202		253	752H	P01D	264	736A	-	274	752A	P03D	284	756A	-	
448B	318.00	287.00	2006	50	50	701	202	294	760A	P08A	310	770C	-	-	-	-	-	-	-	
451B	287.00	240.67	2005	42	42	201		253	751Q	P01E	264	735A	-	274	751A	P03C	284	756A	-	
451B	318.00	287.00	2005	50	50	701	201	294	760A	P08A	310	770A	P18G	-	-	-	-	-	-	
454B	287.00	240.67	2005	45	45	201		253	752H	P01D	264	736G	-	274	752A	P03D	284	756E	-	
454B	318.00	287.00	2005	55	55	701	201	294	760A	P08A	310	770A	-	-	-	-	-	-	-	
457B	287.00	240.67	2004	45	45	201		253	771H	P01E	264	736A	-	274	751A	P03C	284	774E	-	
457B	318.00	287.00	2004	55	55	701	201	294	760Y	P08A	310	770A	-	-	-	-	-	-	-	
459B	287.00	240.67	1001	75	75	101		253	-	P01K	264	738A	-	274	778A	P03H	284	771B	-	
459B	318.00	287.00	8023	55	55	501	101	294	759A	P08B	310	765A	P20E	-	-	-	-	-	-	

LICENSED PROFESSIONAL ENGINEER — LESLIE E. ROBERTSON — No. 34360 — UNIVERSITY OF THE STATE OF NEW YORK

SKILLING-HELLE-CHRISTIANSEN-ROBERTSON — Civil & Structural Engineers

PROJECT	TITLE	DATE
THE WORLD TRADE CENTER	EXTERIOR WALL TO EL.363 - COLUMN SCHEDULE - NOTES	3-31-67

REVISIONS
2-19-68

COLUMN NUMBER	UPPER SPLICE ELEV.	LOWER SPLICE ELEV.	COLUMN					SPANDREL EL. 350						SPANDREL EL. 332						SEAT PLZ
			TYPE	FY1	FY2	UCS	LCS	FY5	FY6	FY7	SCL	SCR	WELD 6	FY8	FY9	FY10	SCL	SCR	WELD 5-SDT	
(1)	(2)	(3)	(4)	(5)	(6)	(7)	(8)	(9)	(10)	(11)	(12)	(13)	(14)	(15)	(16)	(17)	(18)	(19)	(20)	(21) (22)

NOTES -

(1) COLUMN NUMBER A INDICATES TOWER A B INDICATES TOWER B

(2) ELEVATION IN FEET OF UPPER COLUMN SPLICE
(3) ELEVATION IN FEET OF LOWER COLUMN SPLICE

(4) COLUMN TYPE - FOR DIMENSIONS , PLATE THICKNESS , AND WELDS SEE PAGES 1-B2-27 THRU 40

(5) REQUIRED YIELD STRENGTH FOR PLATE NO. 1 KSI
(6) REQUIRED YIELD STRENGTH FOR PLATE NO. 2 KSI

(7) DETAIL NUMBER FOR UPPER COLUMN SPLICE - SEE PAGES 1-B2-45 AND 46
(8) DETAIL NUMBER FOR LOWER COLUMN SPLICE - SEE PAGES 1-B2-45 AND 46

(9) REQUIRED YIELD STRENGTH FOR PLATE NO. 5 KSI
(10) REQUIRED YIELD STRENGTH FOR PLATE NO. 6 KSI
(11) REQUIRED YIELD STRENGTH FOR PLATE NO. 7 KSI

(12) DETAIL NUMBER FOR LEFT SPANDREL CONNECTION - NOTE 23 - SEE PAGES 1-B2-47,48 AND 49
(13) DETAIL NUMBER FOR RIGHT SPANDREL CONNECTION - NOTE 23 - SEE PAGES 1-B2-47, 48 AND 49

(14) WELD 6 INCHES SEE 1-B2-29,32,35,36,37 FOR LOCATION AND TYPE

(15) REQUIRED YIELD STRENGTH FOR PLATE NO. 8 KSI
(16) REQUIRED YIELD STRENGTH FOR PLATE NO. 9 KSI
(17) REQUIRED YIELD STRENGTH FOR PLATE NO.10 KSI

(18) DETAIL NUMBER FOR LEFT SPANDREL CONNECTION - NOTE 23 - SEE PAGE 1-B2-50
(19) DETAIL NUMBER FOR RIGHT SPANDREL CONNECTION - NOTE 23 - SEE PAGE 1-B2-50

(20) WELD 5 INCHES SEE 1-B2-30,33,38 FOR LOCATION AND TYPE

(21) DETAIL NUMBER FOR SEAT DETAIL ON TOWER FACE OF COLUMN - SEE PAGES 1-AB3-19 THRU 35
(22) DETAIL NUMBER FOR SEAT DETAIL ON PLAZA BUILDING FACE OF COLUMN - SEE PAGES 1-AB3-65 & 66

(23) ALL COLUMNS ARE SHOWN FROM INSIDE OF THE TOWER LOOKING OUT

LICENSED PROFESSIONAL ENGINEER LESLIE E. ROBERTSON No. 34360 UNIVERSITY OF THE STATE OF NEW YORK

SKILLING, HELLE, CHRISTIANSEN, ROBERTSON — Structural & Civil Engineers

PROJECT: THE WORLD TRADE CENTER | TITLE: EXTERIOR WALL TO EL.363 - COLUMN SCHEDULE | DATE: 3-31-67

REVISIONS
4-24-67
2-19-68
6-18-68

COLUMN NUMBER	UPPER SPLICE ELEV.	LOWER SPLICE ELEV.	COLUMN TYPE	COLUMN FY1	COLUMN FY2	COLUMN UCS	COLUMN LCS	SPANDREL EL. 350 FY5	SP 350 FY6	SP 350 FY7	SP 350 SCL	SP 350 SCR	SP 350 WELD 6	SPANDREL EL. 332 FY8	SP 332 FY9	SP 332 FY10	SP 332 SCL	SP 332 SCR	SP 332 WELD 5	SP 332 SDT	SEAT PLZ
101B	363.00	318.00	5003	70	70	501	501	60	36	36	-	A15	3/4	36	36	36	-	B11	3/4	850A	-
103B	363.00	318.00	6024	60	60	702	702	60	36	36	A15	A12	3/4	36	36	36	B11	B13	3/4	844A	-
106B	363.00	318.00	7013	60	60	703	703	60	36	36	A12	A12	7/8	36	36	36	B13	B12	3/4	843A	-
109B	363.00	318.00	7016	60	60	704	704	60	36	36	A12	A11	1-3/16	36	36	36	B12	B11	1-1/8	842A	-
112B	363.00	318.00	7217	55	55	704	704	55	36	36	A11	A11	1-3/16	36	36	36	B11	B12	F.P.	841B	▽
115B	363.00	318.00	7217	55	55	704	704	55	36	36	A11	A11	1-3/16	36	36	36	B12	B11	F.P.	840D	P40D
118B	363.00	318.00	7217	55	55	704	704	55	36	36	A11	A11	1-3/16	36	36	42	B11	B14	F.P.	840C	P40E
121B	363.00	318.00	7217	55	55	704	704	55	36	36	A11	A11	1-1/4	36	36	45	B14	B14	F.P.	840A	P40F
124B	363.00	318.00	7217	50	50	704	704	50	36	36	A11	A11	1-1/4	36	36	45	B14	B11	F.P.	840A	P41C
127B	363.00	318.00	7318	50	50	704	704	50	36	36	A11	A11	1-1/4	36	36	45	B11	B11	F.P.	840A	P41C
130B	363.00	318.00	7419	50	50	704	704	50	36	36	A11	A11	1-1/4	36	36	50	B11	B14	F.P.	839A	P41C
133B	363.00	318.00	7419	50	50	704	704	50	36	36	A11	A11	1-1/4	36	36	50	B14	B14	F.P.	840A	P41C
136B	363.00	318.00	7419	50	50	704	704	50	36	36	A11	A11	1-1/4	36	36	50	B14	B14	F.P.	840A	P41C
139B	363.00	318.00	7419	50	50	704	704	50	36	36	A11	A11	1-1/8	36	36	50	B14	B14	F.P.	840A	P41C
142B	363.00	318.00	7020	45	45	705	705	45	36	36	A11	A11	F.P.	36	36	42	B14	B16	F.P.	840B	P41C
145B	363.00	318.00	7020	45	45	705	705	45	36	36	A11	A11	F.P.	36	36	42	B16	B14	F.P.	840D	P41C
148B	363.00	318.00	7217	55	55	704	704	55	36	36	A11	A11	1-1/8	36	36	42	B14	B11	F.P.	841A	P41C
151B	363.00	318.00	7016	60	60	704	704	60	36	36	A11	A12	1-1/4	36	36	42	B11	B11	F.P.	842B	P41C
154B	363.00	318.00	7013	60	60	703	703	60	36	36	A12	A11	1-3/16	36	36	36	B11	B11	1	843A	P41C
157B	363.00	318.00	6024	60	60	702	702	60	36	36	A11	A15	1	36	36	36	B11	B14	3/4	844A	P41C
159B	363.00	318.00	5003	70	70	501	501	60	36	36	A15	-	3/4	36	36	36	B14	-	3/4	850A	P42E
201B	363.00	318.00	5022	60	60	501	501	60	36	36	-	A15	3/4	36	36	36	-	B14	3/4	850A	P42F
203B	363.00	318.00	6004	60	60	701	701	60	36	36	A15	A12	7/8	36	36	36	B14	B12	3/4	848A	P41D
206B	363.00	318.00	7005	60	60	701	701	60	36	36	A12	A13	7/8	36	36	36	B12	B12	3/4	851A	P41D
209B	363.00	318.00	7005	60	60	701	701	60	36	36	A13	A12	7/8	36	36	36	B12	B12	3/4	861A	P41D
212B	363.00	318.00	7006	60	60	701	701	60	36	36	A12	A12	15/16	36	36	36	B12	B12	3/4	851F	P41D
215B	363.00	318.00	7007	60	60	701	701	60	36	36	A12	A12	1-1/16	36	36	36	B12	B12	3/4	867A	P41D
218B	363.00	318.00	7011	60	60	702	702	60	36	36	A12	A11	1-3/16	36	36	36	B12	B11	1	851E	P41D
221B	363.00	318.00	7010	55	55	702	702	55	36	36	A11	A11	1-3/16	36	36	36	B11	B11	1	851E	P41D
224B	363.00	318.00	7008	55	55	701	701	55	36	36	A11	A11	1-3/16	36	36	36	B11	B12	1	852C	P41D
227B	363.00	318.00	7008	50	50	701	701	50	36	36	A11	A11	1-3/16	36	36	36	B12	B11	1	870A	P41D
230B	363.00	318.00	7115	42	42	704	704	42	36	36	A11	A11	1-5/16	36	36	42	B11	B14	F.P.	851B	P41D
233B	363.00	318.00	7115	42	42	704	704	42	36	36	A11	A11	1-5/16	36	36	42	B14	B11	F.P.	851D	P41D
236B	363.00	318.00	7008	50	50	701	701	50	36	36	A11	A12	1-1/8	36	36	36	B11	B12	7/8	872A	P41D
239B	363.00	318.00	7010	50	50	702	702	50	36	36	A12	A12	1-1/16	36	36	36	B12	B12	7/8	851B	P41D
242B	363.00	318.00	7011	55	55	702	702	55	36	36	A12	A12	1	36	36	36	B12	B11	7/8	855B	P41D
245B	363.00	318.00	7114	45	45	704	704	45	36	36	A12	A12	1	36	36	36	B11	B14	F.P.	851A	P41D
248B	363.00	318.00	7006	55	55	701	701	55	36	36	A12	A13	3/4	36	36	36	B14	B13	3/4	854A	P41D
251B	363.00	318.00	7011	45	45	702	702	45	36	36	A13	A13	7/8	36	36	36	B13	B13	3/4	852A	P41D
254B	363.00	318.00	7005	50	50	701	701	50	36	36	A13	A12	3/4	36	36	36	B13	B13	3/4	851A	P41D
257B	363.00	318.00	6004	55	55	701	701	55	36	36	A12	A15	3/4	36	36	36	B13	B11	3/4	848A	P41D
259B	363.00	318.00	5022	60	60	501	501	60	36	36	A15	-	3/4	36	36	36	B11	-	3/4	850A	P42F

LICENSED PROFESSIONAL ENGINEER — LESLIE E. ROBERTSON — No. 34360 — UNIVERSITY OF THE STATE OF NEW YORK

SKILLING, HELLE, CHRISTIANSEN, ROBERTSON — **Structural & Civil Engineers**

PROJECT: THE WORLD TRADE CENTER | TITLE: EXTERIOR WALL TO EL.363 - COLUMN SCHEDULE | DATE: 3-31-67

REVISIONS
4-24-67
2-19-68
6-18-68

COLUMN NUMBER	UPPER SPLICE ELEV.	LOWER SPLICE ELEV.	COLUMN TYPE	COLUMN FY1	COLUMN FY2	COLUMN UCS	COLUMN LCS	SPANDREL EL. 350 FY5	SPANDREL EL. 350 FY6	SPANDREL EL. 350 FY7	SPANDREL EL. 350 SCL	SPANDREL EL. 350 SCR	SPANDREL EL. 350 WELD 6	SPANDREL EL. 332 FY8	SPANDREL EL. 332 FY9	SPANDREL EL. 332 FY10	SPANDREL EL. 332 SCL	SPANDREL EL. 332 SCR	SPANDREL EL. 332 WELD 5	SPANDREL EL. 332 SDT	SEAT PLZ
301B	363.00	318.00	5003	70	70	501	501	(60)	36	36	-	A15	3/4	36	36	36	-	B14	3/4	850A	P42E
303B	363.00	318.00	6009	60	60	702	702	60	36	36	A15	A11	3/4	36	36	36	B14	B11	3/4	844A	P41C
306B	363.00	318.00	7013	60	60	703	703	60	36	36	A11	A12	1-1/4	36	36	36	B11	B11	15/16	843A	P41C
309B	363.00	318.00	7016	55	55	704	704	55	36	36	A12	A12	1-1/4	36	36	36	B11	B12	1-1/8	842A	P41C
312B	363.00	318.00	7217	55	55	704	704	55	36	36	A12	A11	1-1/4	36	36	45	B12	B16	F.P.	841B	P41C
315B	363.00	318.00	7021	36	36	705	705	36	36	36	A11	A16	F.P.	36	36	45	B16	B15	F.P.	840D	P41C
318B	363.00	318.00	7021	36	36	705	705	36	36	36	A16	A11	F.P.	36	36	45	B15	B14	F.P.	840C	P41C
321B	363.00	318.00	7217	50	50	704	704	50	36	36	A11	A11	1-1/4	36	36	45	B14	B11	F.P.	840A	P41C
324B	363.00	318.00	7217	45	45	704	704	45	36	36	A11	A11	1-1/4	36	36	45	B11	B14	F.P.	840A	P41C
327B	363.00	318.00	7318	45	45	704	704	45	36	36	A11	A11	1-3/16	36	36	50	B14	B14	F.P.	840A	P41C
330B	363.00	318.00	7419	45	45	704	704	45	36	36	A11	A11	1-3/16	36	36	50	B14	B11	F.P.	839A	P41C
333B	363.00	318.00	7419	42	42	704	704	42	36	36	A11	A11	1-3/16	36	36	50	B11	B11	F.P.	840A	P41C
336B	363.00	318.00	7419	42	42	704	704	42	36	36	A11	A11	1-3/16	36	36	50	B11	B14	F.P.	840A	P41C
339B	363.00	318.00	7419	42	42	704	704	42	36	36	A11	A11	1-3/16	36	36	50	B14	B14	F.P.	840A	P40F
342B	363.00	318.00	7318	42	42	704	704	42	36	36	A11	A11	1-1/4	36	36	45	B14	B11	F.P.	840B	P40E
345B	363.00	318.00	7217	42	42	704	704	42	36	36	A11	A11	1-1/4	36	36	42	B11	B11	F.P.	840D	P40D
348B	363.00	318.00	7217	42	42	704	704	42	36	36	A11	A11	1-1/4	36	36	42	B11	B11	F.P.	841A	-
351B	363.00	318.00	7016	42	42	704	704	42	36	36	A11	A12	1-1/4	36	36	36	B11	B11	F.P.	842A	-
354B	363.00	318.00	7013	45	45	703	703	45	36	36	A12	A11	1-1/8	36	36	36	B11	B11	15/16	843A	-
357B	363.00	318.00	6009	50	50	702	702	50	36	36	A11	A15	1	36	36	36	B11	B14	3/4	844A	-
359B	363.00	318.00	5023	60	60	501	501	(60)	36	36	A15	-	3/4	36	36	36	B14	-	3/4	850A	-
401B	363.00	318.00	5001	75	75	501	501	(60)	36	36	-	A14	3/4	36	36	36	-	B14	3/4	850A	-
403B	363.00	318.00	6004	50	50	701	701	50	36	36	A14	A11	13/16	36	36	36	B14	B12	3/4	848A	-
406B	363.00	318.00	7005	45	45	701	701	45	36	36	A11	A13	13/16	36	36	36	B12	B12	3/4	851A	-
409B	363.00	318.00	7011	45	45	702	702	45	36	36	A13	A12	1-1/16	36	36	36	B12	B13	3/4	852A	-
412B	363.00	318.00	7006	45	45	701	701	45	36	36	A12	A12	15/16	36	36	36	B13	B12	3/4	854A	-
415B	363.00	318.00	7007	50	50	701	701	50	36	36	A12	A12	15/16	36	36	36	B12	B12	3/4	851A	-
418B	363.00	318.00	7011	50	50	702	702	50	36	36	A12	A12	1-1/16	36	36	36	B12	B11	7/8	855A	-
421B	363.00	318.00	7010	50	50	702	702	50	36	36	A12	A12	1-1/8	36	36	36	B11	B11	7/8	851B	-
424B	363.00	318.00	7008	55	55	701	701	55	36	36	A12	A13	1-3/16	36	36	36	B11	B11	7/8	858A	-
427B	363.00	318.00	7115	45	45	704	704	45	36	36	A13	A13	1-1/4	36	36	42	B11	B11	F.P.	851C	-
430B	363.00	318.00	7115	45	45	704	704	45	36	36	A13	A13	1-1/4	36	36	42	B11	B11	F.P.	852B	-
433B	363.00	318.00	7008	55	55	701	701	55	36	36	A13	A13	1-3/16	36	36	36	B11	B11	1-1/16	851A	-
436B	363.00	318.00	7008	60	60	701	701	60	36	36	A13	A13	1-3/16	36	36	36	B11	B11	1-1/16	858A	-
439B	363.00	318.00	7010	60	60	702	702	60	36	36	A13	A13	1-3/16	36	36	36	B11	B11	1-1/16	851B	-
442B	363.00	318.00	7028	60	60	702	702	60	36	36	A13	A12	1-1/8	36	36	36	B11	B12	1-1/16	855A	-
445B	363.00	318.00	7027	60	60	701	701	60	36	36	A12	A12	1	36	36	36	B12	B12	3/4	851A	-
448B	363.00	318.00	7026	60	60	701	701	60	36	36	A12	A13	7/8	36	36	36	B12	B13	3/4	854A	-
451B	363.00	318.00	7025	60	60	701	701	60	36	36	A13	A13	3/4	36	36	36	B13	B13	3/4	852A	-
454B	363.00	318.00	7025	60	60	701	701	60	36	36	A13	A13	3/4	36	36	36	B13	B12	3/4	851A	-
457B	363.00	318.00	6004	70	70	701	701	60	36	36	A13	A14	3/4	36	36	36	B12	B11	3/4	848A	-
459B	363.00	318.00	5001	70	70	501	501	60	36	36	A14	-	3/4	36	36	36	B11	-	3/4	850A	-

LICENSED PROFESSIONAL ENGINEER ★ LESLIE E. ROBERTSON ★ No. 34360 ★ UNIVERSITY OF THE STATE OF NEW YORK

1-82- 8

REVISIONS

2-19-68

MEMBER NUMBER	LENGTH FT	LENGTH INCHES	MEMBER TYPE	MEMBER FY1	MEMBER FY2	CONN DET LFT	CONN DET RGT	WELD NO. 1 CNO (8)	WELD NO. 1 SIZE (9)	CNO (8)	SIZE (9)	CNO (8)	SIZE (9)	CNO (8)	SIZE (9)	CNO (8)	SIZE (9)
(1)	(2)		(3)	(4)	(5)	(6)	(7)										

NOTES -

(1) MEMBER NUMBER - SEE DRAWINGS SB-125,SB-126,SB-127 AND SB-128 FOR LOCATION OF MEMBERS

(2) LENGTH OF MEMBER - LENGTH INDICATED IS CENTER LINE TO CENTER LINE OF COLUMN OR WORKPOINT TO WORK POINT

(3) MEMBER TYPE - FOR DIMENSIONS, PLATE THICKNESS AND WELDS SEE PAGES 1-B2-55 THRU 67,100,101&102

(4) REQUIRED YIELD STRENGTH OF PLATE NO. 1 (KSI).

(5) REQUIRED YIELD STRENGTH OF PLATE NO. 2 (KSI)

(6) DETAIL NUMBER FOR CONNECTION AT LEFT END OF MEMBER - SEE PAGES 1-B2-69 THRU 99
NOTE - MEMBERS ARE SHOWN FROM INSIDE OF TOWER LOOKING OUT

(7) DETAIL NUMBER FOR CONNECTION AT RIGHT END OF MEMBER - SEE PAGES 1-B2-69 THRU 99

(8) COLUMN NUMBER AT WHICH WELD NO. 1 OF SIZE SHOWN IN (9) APPLIES. SEE MEMBER TYPE FOR DETAILS OF WELD NO. 1

(9) SIZE OF WELD NO. 1 AT LOCATION INDICATED IN (8)

REGISTERED PROFESSIONAL ENGINEER LESLIE E. ROBERTSON No. 34360 UNIVERSITY OF THE STATE OF NEW YORK

WORTHINGTON, SKILLING, HELLE & JACKSON — Civil & Structural Engineers

PROJECT: THE WORLD TRADE CENTER | TITLE: EXTERIOR WALL TO EL.363 - SPANDREL AND STRUT SCHEDULE | DATE: 3-31-67

REVISIONS

* REV 5-08-67

MEMBER NUMBER	LENGTH FT	LENGTH INCHES	MEMBER TYPE	MEMBER FY1	MEMBER FY2	CONN DET LFT	CONN DET RGT	WELD NO. 1 CNO	WELD NO. 1 SIZE	CNO	SIZE	CNO	SIZE	CNO	SIZE	CNO	SIZE
C101B	36	8	C41	42	36	1	3	101	1/2	103	1/2	106	5/8	109	3/4	112	13/16
C102B	40	0	C45	36	36	3	3	112	13/16	115	7/8	118	7/8	121	15/16	124	15/16
C103B	40	0	C455	36	36	3	3	124	15/16	127	15/16	130	15/16	133	15/16	136	15/16
C104B	40	0	C46	45	45	3	3	136	15/16	139	1-1/8	142	1-1/2	145	1-1/2	148	15/16
C105B	36	8	C41	42	36	3	2	148	15/16	151	5/8	154	5/8	157	1/2	159	1/2
D101B	6	8	D11	36	36	28	6	101	1/2	103	1/2	-	-	-	-	-	-
D102B	40	0	D41	36	36	6	6	103	1/2	106	1/2	109	5/8	112	1/2	115	9/16
D103B	40	0	D41	42	36	6	6	115	9/16	118	9/16	121	3/4	124	1/2	127	9/16
D104B	30	0	D31	45	36	6	32	127	9/16	130	9/16	133	5/8	136	1/2	-	-
D105B	20	9- 5/16	D21	45	36	32	81	136	1/2	139	1/2	-	-	-	-	-	-
D106B	20	9- 5/16	D21	45	36	82	33	-	-	148	1/2	151	1/2	-	-	-	-
D107B	26	8	D31	36	36	33	5	151	1/2	154	1/2	157	1/2	159	1/2	-	-
E101B	16	8	E21	36	36	40	42	101	5/16	-	-	106	3/8	-	-	-	-
E102B	30	0	E31	36	36	42	13	106	3/8	109	3/8	112	1/2	-	-	-	-
E103B	40	0	E41	36	36	13	13	-	-	118	1/2	121	1/2	124	1/2	-	-
E104B	40	0	E41	36	36	13	78	-	-	130	1/2	133	1/2	136	1/2	139	7/8
E105B	36	8	E41	36	36	79	12	148	7/8	151	3/8	154	3/8	157	5/16	159	5/16
E106B	30	0	E13	36	36	60	61	-	-	-	-	-	-	-	-	-	-
F101B	26	8	F31	36	36	15	20	101	3/8	103	3/8	106	3/8	-	-	-	-
F102B	40	0	F41	36	36	20	20	-	-	112	1/2	115	1/2	118	1/2	-	-
F103B	40	0	F41	36	36	20	20	-	-	124	1/2	127	1/2	130	1/2	-	-
F104B	20	0	F21	36	36	20	60	-	-	136	1/2	-	-	-	-	-	-
F105B	20	0	F21	36	36	61	18	-	-	151	3/8	-	-	-	-	-	-
F106B	16	8	F21	36	36	18	16	-	-	157	3/8	159	3/8	-	-	-	-
H101B	6	8	H11	45	36	65	67	101	3/4	103	5/8	-	-	-	-	-	-
H102B	40	0	H41	36	36	67	23	103	5/8	106	3/8	109	3/8	112	1/2	115	5/8
H103B	40	0	H41	36	36	23	23	115	5/8	118	1/2	121	1/2	124	1/2	127	5/8
H104B	40	0	H41	36	36	23	69	127	5/8	130	1/2	133	1/2	136	1/2	-	-
H105B	30	0	H13	36	36	69	70	-	-	-	-	-	-	-	-	-	-
H106B	36	8	H41	36	36	70	22	-	-	151	3/8	154	3/8	157	3/8	159	7/8

LICENSED PROFESSIONAL ENGINEER LESLIE E. ROBERTSON No. 34360 UNIVERSITY OF THE STATE OF NEW YORK

1-82- 10

WORTHINGTON, SKILLING, HELLE & JACKSON — Civil & Structural Engineers

PROJECT: THE WORLD TRADE CENTER | TITLE: EXTERIOR WALL TO EL.363 - BRACING SCHEDULE | DATE: 3-31-67

REVISIONS

REV 4-24-67

MEMBER NUMBER	LENGTH FT	LENGTH INCHES	MEMBER TYPE	MEMBER FY1	MEMBER FY2	CONN DET LFT	CONN DET RGT	WELD NO. 1 CNO	WELD NO. 1 SIZE	CNO	SIZE	CNO	SIZE	CNO	SIZE	CNO	SIZE
G101B	28	8- 3/8	G21	36	36	38	20	103	3/8	106	3/8	109	3/8	-	-	-	-
G102B	43	0- 9/16	G34	50	36	20	9	109	3/8	112	1/2	115	1/2	118	9/16	-	-
G103B	28	8- 3/8	G21	50	36	13	20	115	1/2	118	1/2	121	1/2	-	-	-	-
G104B	43	0- 9/16	G33	50	36	20	9	121	1/2	124	1/2	127	1/2	130	9/16	-	-
G105B	28	8- 3/8	G22	50	36	13	20	127	1/2	130	1/2	133	1/2	-	-	-	-
G106B	28	8- 3/8	G24	50	36	20	78	133	1/2	136	1/2	-	-	-	-	-	-
G107B	28	8- 3/8	G27	50	36	79	18	-	-	151	3/8	154	3/8	-	-	-	-
G108B	26	5-13/16	G21	36	36	18	12	154	3/8	157	3/8	159	5/16	-	-	-	-
G109B	14	4- 3/16	G11	45	36	38	9	103	3/8	106	1/2	-	-	-	-	-	-
G110B	14	4- 3/16	G11	45	36	10	13	112	1/2	115	1/2	-	-	-	-	-	-
G111B	14	4- 3/16	G11	50	36	10	13	124	1/2	127	1/2	-	-	-	-	-	-
G112B	14	4- 3/16	G11	42	36	32	78	136	1/2	139	7/8	-	-	-	-	-	-
G113B	14	4- 3/16	G11	36	36	79	33	148	7/8	151	1/2	-	-	-	-	-	-
G114B	12	3- 1/8	G11	36	36	8	12	157	1/2	159	5/16	-	-	-	-	-	-
G115B	28	9-13/16	G24	50	36	67	20	103	5/8	106	3/8	109	3/8	-	-	-	-
G116B	28	9-13/16	G21	42	36	20	23	109	3/8	112	1/2	115	5/8	-	-	-	-
G117B	28	9-13/16	G23	50	36	23	20	115	5/8	118	1/2	121	1/2	-	-	-	-
G118B	28	9-13/16	G21	50	36	20	23	121	1/2	124	1/2	127	5/8	-	-	-	-
G119B	28	9-13/16	G23	50	36	23	20	127	5/8	130	1/2	133	1/2	-	-	-	-
G120B	28	9-13/16	G21	50	36	20	69	133	1/2	136	1/2	-	-	-	-	-	-
G121B	18	2- 7/8	G11	36	36	69	53	-	-	-	-	-	-	-	-	-	-
G122B	18	2- 7/8	G11	36	36	53	61	-	-	-	-	-	-	-	-	-	-
G123B	36	5- 3/4	G11	36	36	60	70	-	-	-	-	-	-	-	-	-	-
G124B	28	9-13/16	G21	36	36	70	18	-	-	151	3/8	154	3/8	-	-	-	-
G125B	26	7- 3/8	G25	50	36	18	22	154	3/8	157	3/8	159	7/8	-	-	-	-
G151B	12	3- 1/8	G11	36	36	28	38	101	1/2	103	3/8	-	-	-	-	-	-
G152B	12	3- 1/8	G11	42	36	54	38	101	3/8	103	3/8	-	-	-	-	-	-
G153B	12	3- 1/8	G11	36	36	54	58	101	3/8	103	3/8	-	-	-	-	-	-
G154B	12	4	G11	42	36	54	58	101	3/8	103	3/8	-	-	-	-	-	-
G155B	12	4	G11	36	36	54	67	101	3/8	103	5/8	-	-	-	-	-	-

LICENSED PROFESSIONAL ENGINEER LESLIE E. ROBERTSON No. 34360 UNIVERSITY OF THE STATE OF NEW YORK

1-B2- 11

SKILLING-HELLE-CHRISTIANSEN-ROBERTSON — Civil & Structural Engineers

PROJECT: THE WORLD TRADE CENTER | TITLE: EXTERIOR WALL TO EL.363 - SPANDREL AND STRUT SCHEDULE | DATE: 3-31-67

REVISIONS
5-8-67
2-15-68

MEMBER NUMBER	LENGTH FT	LENGTH INCHES	MEMBER TYPE	FY1	FY2	CONN DET LFT	CONN DET RGT	WELD NO. 1 CNO	SIZE	CNO	SIZE	CNO	SIZE	CNO	SIZE	CNO	SIZE
C201B	36	8	C41	42	36	1	3	201	1/2	203	1/2	206	9/16	209	9/16	212	5/8
C202B	40	0	C456	36	36	3	3	212	5/8	215	5/8	218	13/16	221	3/4	224	3/4
C203B	40	0	C459	36	36	3	3	224	3/4	227	3/4	230	15/16	233	7/8	236	3/4
C204B	20	0	C21	42	36	3	24	236	3/4	239	5/8	242	11/16	-	-	-	-
C205B	36	8	C41	42	36	25	2	248	3/4	251	5/8	254	1/2	257	1/2	259	1/2
D201B	6	8	D11	36	36	28	6	201	1/2	203	1/2	-	-	-	-	-	-
D202B	40	0	D41	42	36	6	6	203	1/2	206	1/2	209	5/8	212	1/2	215	9/16
D203B	40	0	D41	42	36	6	6	215	9/16	218	1/2	221	11/16	224	1/2	227	11/16
D204B	30	0	D31	50	36	6	6	227	11/16	230	3/4	233	3/4	236	9/16	-	-
D205B	20	0	D21	36	36	6	30	236	9/16	239	1/2	-	-	-	-	-	-
D206B	36	8	D41	36	36	31	5	-	-	251	1/2	254	1/2	257	1/2	259	1/2
E201B	16	8	E21	36	36	40	42	201	5/16	-	-	206	5/16	-	-	-	-
E202B	30	0	E31	36	36	42	13	206	5/16	209	5/16	212	5/16	-	-	-	-
E203B	40	0	E41	36	36	13	45	-	-	218	5/16	221	5/16	224	5/16	227	5/16
E204B	10	0	E11	36	36	45	89	227	5/16	-	-	-	-	-	-	-	-
E205B	10	0	E11	36	36	90	46	-	-	236	5/16	-	-	-	-	-	-
E206B	40	0	E32	36	36	46	48	236	5/16	239	5/16	242	1/2	248	1/2	-	-
E207B	10	0	E11	36	36	48	98	248	1/2	-	-	-	-	-	-	-	-
E208B	26	8	E31	36	36	98	44	-	-	254	5/16	257	5/16	259	5/16	-	-
E209B	10	0	E11	36	36	24	93	242	11/16	-	-	-	-	-	-	-	-
E210B	10	0	E11	36	36	93	25	-	-	248	3/4	-	-	-	-	-	-
E211B	40	0	E33	36	36	87	94	236	1/2	239	5/16	242	1/2	248	1/2	-	-
E212B	20	0	E22	42	36	20	85	-	-	224	5/16	227	1/2	-	-	-	-
F201B	26	8	F31	36	36	15	20	201	3/8	203	3/8	206	5/16	-	-	-	-
F202B	40	0	F41	36	36	20	20	-	-	212	5/16	215	5/16	218	5/16	221	5/16
F203B	16	8	F21	36	36	96	64	254	1/2	257	5/16	259	3/8	-	-	-	-
H201B	6	8	H11	42	36	65	67	201	5/8	203	9/16	-	-	-	-	-	-
H202B	40	0	H41	36	36	67	23	203	9/16	206	3/8	209	3/8	212	3/8	215	9/16
H203B	40	0	H41	36	36	23	71	215	9/16	218	3/8	221	3/8	224	3/8	-	-
H204B	30	0	H13	36	36	71	72	-	-	-	-	-	-	-	-	-	-
H205B	20	0	H21	36	36	72	73	-	-	239	3/8	242	1/2	-	-	-	-
H206B	20	0	H12	36	36	73	74	-	-	242	1/2	-	-	-	-	-	-
H207B	20	0	H12	36	36	74	72	-	-	-	-	-	-	-	-	-	-
H208B	16	8	H21	36	36	72	76	-	-	257	3/8	259	7/8	-	-	-	-

LICENSED PROFESSIONAL ENGINEER
LESLIE E. ROBERTSON
No. 34360
UNIVERSITY OF THE STATE OF NEW YORK

WORTHINGTON, SKILLING, HELLE & JACKSON — Civil & Structural Engineers

PROJECT: THE WORLD TRADE CENTER | TITLE: EXTERIOR WALL TO EL.363 - BRACING SCHEDULE | DATE: 3-31-67

REVISIONS

REV 4-24-67

MEMBER NUMBER	LENGTH FT	LENGTH INCHES	MEMBER TYPE	MEMBER FY1	MEMBER FY2	CONN DET LFT	CONN DET RGT	WELD NO. 1 CNO	WELD NO. 1 SIZE	CNO	SIZE	CNO	SIZE	CNO	SIZE	CNO	SIZE
G201B	28	8- 3/8	G21	36	36	38	20	203	5/16	206	3/8	209	3/8	-	-	-	-
G202B	43	0- 9/16	G32	50	36	20	9	209	3/8	212	3/8	215	5/16	218	1/2	-	-
G203B	28	8- 3/8	G21	42	36	13	20	215	5/16	218	3/8	221	3/8	-	-	-	-
G204B	28	8- 3/8	G21	50	36	20	45	221	3/8	224	3/8	227	5/16	-	-	-	-
G205B	14	4- 3/16	G11	36	36	38	9	203	5/16	206	1/2	-	-	-	-	-	-
G206B	14	4- 3/16	G11	36	36	10	13	212	1/2	215	5/16	-	-	-	-	-	-
G207B	14	4- 3/16	G11	36	36	10	45	224	1/2	227	5/16	-	-	-	-	-	-
G208B	28	9-13/16	G22	50	36	67	20	203	9/16	206	3/8	209	3/8	-	-	-	-
G209B	28	9-13/16	G21	36	36	20	23	209	3/8	212	3/8	215	9/16	-	-	-	-
G210B	28	9-13/16	G22	50	36	23	20	215	9/16	218	3/8	221	3/8	-	-	-	-
G211B	28	9-13/16	G21	42	36	20	71	221	3/8	224	3/8	-	-	-	-	-	-
G212B	12	2- 3/4	G11	36	36	36	91	239	1/2	-	-	-	-	-	-	-	-
G213B	14	4- 3/16	G11	36	36	46	36	236	5/16	239	1/2	-	-	-	-	-	-
G214B	14	4- 3/16	G11	36	36	36	47	239	1/2	242	1/2	-	-	-	-	-	-
G215B	28	8- 3/8	G21	36	36	46	62	236	5/16	239	3/8	242	1/2	-	-	-	-
G216B	14	4- 3/16	G11	36	36	87	52	236	1/2	239	3/8	-	-	-	-	-	-
G217B	14	4- 3/16	G11	36	36	52	47	239	3/8	242	1/2	-	-	-	-	-	-
G218B	28	9-13/16	G21	50	36	87	73	-	-	239	3/8	242	1/2	-	-	-	-
G219B	14	4- 7/8	G11	42	36	72	52	-	-	239	3/8	-	-	-	-	-	-
G220B	14	4- 7/8	G11	42	36	52	62	239	3/8	242	1/2	-	-	-	-	-	-
G221B	14	4- 3/16	G11	36	36	62	53	242	1/2	-	-	-	-	-	-	-	-
G222B	14	4- 3/16	G11	36	36	53	48	-	-	248	1/2	-	-	-	-	-	-
G223B	28	8- 3/8	G11	42	36	47	94	242	1/2	248	1/2	-	-	-	-	-	-
G224B	12	2- 3/4	G11	36	36	92	37	-	-	251	1/2	-	-	-	-	-	-
G225B	14	4- 3/16	G11	42	36	37	49	251	1/2	254	5/16	-	-	-	-	-	-
G226B	14	4- 3/16	G11	36	36	49	35	254	5/16	257	1/2	-	-	-	-	-	-
G227B	14	4- 3/16	G11	36	36	49	57	254	5/16	257	3/8	-	-	-	-	-	-
G228B	14	4- 3/16	G11	36	36	96	57	254	1/2	257	3/8	-	-	-	-	-	-
G229B	14	4- 7/8	G14	50	36	96	57	-	-	257	3/8	-	-	-	-	-	-
G230B	14	4- 7/8	G11	36	36	72	57	-	-	257	3/8	-	-	-	-	-	-
G251B	12	3- 1/8	G11	36	36	28	38	201	1/2	203	5/16	-	-	-	-	-	-
G252B	12	3- 1/8	G11	36	36	54	38	201	3/8	203	5/16	-	-	-	-	-	-
G253B	12	3- 1/8	G11	36	36	54	58	201	3/8	203	3/8	-	-	-	-	-	-
G254B	12	4	G11	36	36	54	58	201	3/8	203	3/8	-	-	-	-	-	-
G255B	12	4	G11	36	36	54	67	201	3/8	203	9/16	-	-	-	-	-	-
G256B	12	3- 1/8	G11	36	36	35	44	257	1/2	259	5/16	-	-	-	-	-	-
G257B	12	3- 1/8	G11	42	36	57	44	257	3/8	259	5/16	-	-	-	-	-	-
G258B	12	3- 1/8	G11	36	36	57	64	257	3/8	259	3/8	-	-	-	-	-	-
G259B	12	4	G11	36	36	57	64	257	3/8	259	3/8	-	-	-	-	-	-
G260B	12	4	G14	50	36	57	76	257	3/8	259	7/8	-	-	-	-	-	-

LICENSED PROFESSIONAL ENGINEER LESLIE E. ROBERTSON No. 34360 OF THE STATE OF NEW YORK

1-B2- 13

SKILLING-HELLE-CHRISTIANSEN-ROBERTSON — Civil & Structural Engineers

PROJECT: THE WORLD TRADE CENTER

TITLE: EXTERIOR WALL TO EL.363 - SPANDREL AND STRUT SCHEDULE

DATE: 3-31-67

REVISIONS
5-8-67
2-15-68

MEMBER NUMBER	LENGTH FT	LENGTH INCHES	MEMBER TYPE	MEMBER FY1	MEMBER FY2	CONN DET LFT	CONN DET RGT	WELD NO. 1 CNC	WELD NO. 1 SIZE	CNC	SIZE	CNC	SIZE	CNC	SIZE	CNC	SIZE
C301B	36	8	C411	36	36	1	26	301	1/2	303	1/2	306	9/16	309	9/16	312	9/16
C302B	10	0	C11	45	36	27	3	321	3/4	324	13/16	-	-	-	-	-	-
C303B	40	0	C457	36	36	3	3	324	13/16	327	15/16	330	15/16	333	15/16	336	15/16
C304B	40	0	C45	36	36	3	3	336	15/16	339	1-1/8	342	15/16	345	15/16	348	7/8
C305B	36	8	C458	36	36	3	2	348	7/8	351	13/16	354	3/4	357	1/2	359	1/2
D301B	26	8	D31	36	36	4	6	301	1/2	303	1/2	306	1/2	309	1/2	-	-
D302B	10	0-5/16	D11	36	36	6	83	309	1/2	312	1-1/4	-	-	-	-	-	-
D303B	10	0-5/16	D11	36	36	84	6	321	1-1/4	324	5/8	-	-	-	-	-	-
D304B	30	0	D31	50	36	6	6	324	5/8	327	11/16	330	1/2	333	5/8	-	-
D305B	40	0	D41	50	36	6	6	333	5/8	336	9/16	339	13/16	342	9/16	345	5/8
D306B	40	0	D41	42	36	6	6	345	5/8	348	1/2	351	11/16	354	1/2	357	1/2
D307B	6	8	D11	36	36	6	29	357	1/2	359	1/2	-	-	-	-	-	-
E301B	26	8	E31	36	36	11	50	301	5/16	303	5/16	306	3/8	309	3/8	-	-
E302B	10	0	E12	50	36	50	99	309	3/8	-	-	-	-	-	-	-	-
E303B	10	0	E12	50	36	100	51	-	-	324	1/2	-	-	-	-	-	-
E304B	30	0	E31	36	36	51	13	324	1/2	327	1/2	330	1/2	-	-	-	-
E305B	40	0	E41	36	36	13	14	-	-	336	1/2	339	1/2	342	1/2	-	-
E306B	30	0	E31	36	36	14	42	-	-	348	1/2	351	3/8	354	3/8	-	-
E307B	16	8	E21	36	36	42	41	354	3/8	-	-	359	5/16	-	-	-	-
E308B	10	0	E11	50	36	26	181	312	9/16	-	-	-	-	-	-	-	-
E309B	10	0	E11	50	36	182	27	-	-	321	3/4	-	-	-	-	-	-
E310B	30	0	E13	36	36	60	61	-	-	-	-	-	-	-	-	-	-
F301B	16	8	F21	36	36	15	17	301	3/8	303	3/8	-	-	-	-	-	-
F302B	20	0	F21	36	36	17	60	-	-	309	3/8	-	-	-	-	-	-
F303B	20	0	F21	36	36	61	20	-	-	324	1/2	-	-	-	-	-	-
F304B	40	0	F41	36	36	20	19	-	-	330	1/2	333	1/2	336	1/2	-	-
F305B	40	0	F41	36	36	19	19	-	-	342	1/2	345	1/2	348	1/2	-	-
F306B	26	8	F31	36	36	19	16	-	-	354	3/8	357	3/8	359	3/8	-	-
H301B	36	8	H41	36	36	21	69	301	3/4	303	3/8	306	3/8	309	3/8	-	-
H302B	30	0	H13	36	36	69	70	-	-	-	-	-	-	-	-	-	-
H303B	40	0	H41	36	36	70	23	-	-	324	1/2	327	1/2	330	1/2	333	9/16
H304B	40	0	H41	36	36	23	23	333	9/16	336	1/2	339	1/2	342	1/2	345	9/16
H305B	40	0	H41	36	36	23	68	345	9/16	348	1/2	351	3/8	354	3/8	357	9/16
H306B	6	8	H11	42	36	68	66	357	9/16	359	5/8	-	-	-	-	-	-

LICENSED PROFESSIONAL ENGINEER
LESLIE E. ROBERTSON
No. 34360
UNIVERSITY OF THE STATE OF NEW YORK

1-82- 14

WORTHINGTON, SKILLING, HELLE & JACKSON — Civil & Structural Engineers

PROJECT: THE WORLD TRADE CENTER

TITLE: EXTERIOR WALL TO EL.363 - BRACING SCHEDULE

DATE: 3-31-67

REVISIONS

REV 4-24-67

MEMBER NUMBER	LENGTH FT	LENGTH INCHES	MEMBER TYPE	MEMBER FY1	MEMBER FY2	CONN DET LFT	CONN DET RGT	WELD NO. 1 CNO	WELD NO. 1 SIZE	CNO	SIZE	CNO	SIZE	CNO	SIZE	CNO	SIZE
G301B	26	5-13/16	G21	36	36	11	17	301	5/16	303	3/8	306	3/8	-	-	-	-
G302B	28	8- 3/8	G28	50	36	17	99	306	3/8	309	3/8	-	-	-	-	-	-
G303B	28	8- 3/8	G22	50	36	100	20	-	-	324	1/2	327	1/2	-	-	-	-
G304B	43	0- 9/16	G33	50	36	20	9	327	1/2	330	1/2	333	1/2	336	9/16	-	-
G305B	28	8- 3/8	G22	50	36	13	19	333	1/2	336	1/2	339	1/2	-	-	-	-
G306B	28	8- 3/8	G21	50	36	19	14	339	1/2	342	1/2	345	1/2	-	-	-	-
G307B	43	0- 9/16	G32	50	36	10	19	342	9/16	345	1/2	348	1/2	351	3/8	-	-
G308B	28	8- 3/8	G21	42	36	19	39	351	3/8	354	3/8	357	3/8	-	-	-	-
G309B	12	3- 1/8	G11	36	36	11	7	301	5/16	303	1/2	-	-	-	-	-	-
G310B	13	10- 3/16	G13	50	36	50	83	309	3/8	-	-	-	-	-	-	-	-
G311B	13	10- 3/16	G11	50	36	84	51	-	-	324	1/2	-	-	-	-	-	-
G312B	14	4- 3/16	G11	50	36	10	13	330	1/2	333	1/2	-	-	-	-	-	-
G313B	14	4- 3/16	G11	45	36	14	9	345	1/2	348	1/2	-	-	-	-	-	-
G314B	14	4- 3/16	G11	42	36	10	39	354	1/2	357	3/8	-	-	-	-	-	-
G315B	26	7- 3/8	G25	50	36	21	17	301	3/4	303	3/8	306	3/8	-	-	-	-
G316B	28	9-13/16	G21	36	36	17	69	306	3/8	309	3/8	-	-	-	-	-	-
G317B	18	2- 7/8	G11	36	36	69	53	-	-	-	-	-	-	-	-	-	-
G318B	18	2- 7/8	G11	36	36	53	61	-	-	-	-	-	-	-	-	-	-
G319B	36	5- 3/4	G11	36	36	60	70	-	-	-	-	-	-	-	-	-	-
G320B	28	9-13/16	G21	50	36	70	20	-	-	324	1/2	327	1/2	-	-	-	-
G321B	28	9-13/16	G21	50	36	20	23	327	1/2	330	1/2	333	9/16	-	-	-	-
G322B	28	9-13/16	G21	50	36	23	19	333	9/16	336	1/2	339	1/2	-	-	-	-
G323B	28	9-13/16	G21	50	36	19	23	339	1/2	342	1/2	345	9/16	-	-	-	-
G324B	28	9-13/16	G21	42	36	23	19	345	9/16	348	1/2	351	3/8	-	-	-	-
G325B	28	9-13/16	G22	50	36	19	68	351	3/8	354	3/8	357	9/16	-	-	-	-
G351B	12	3- 1/8	G11	36	36	39	29	357	3/8	359	1/2	-	-	-	-	-	-
G352B	12	3- 1/8	G11	36	36	39	55	357	3/8	359	3/8	-	-	-	-	-	-
G353B	12	3- 1/8	G11	36	36	59	55	357	3/8	359	3/8	-	-	-	-	-	-
G354B	12	4	G11	36	36	59	55	357	3/8	359	3/8	-	-	-	-	-	-
G355B	12	4	G11	36	36	68	55	357	9/16	359	3/8	-	-	-	-	-	-

LICENSED PROFESSIONAL ENGINEER
LESLIE E. ROBERTSON
No. 34360
UNIVERSITY OF THE STATE OF NEW YORK

1-82- 15

SKILLING-HELLE-CHRISTIANSEN-ROBERTSON — Civil & Structural Engineers

PROJECT: THE WORLD TRADE CENTER | TITLE: EXTERIOR WALL TO EL.363 - SPANDREL AND STRUT SCHEDULE | DATE: 3-31-67

REVISIONS
5-8-67
2-15-68

MEMBER NUMBER	LENGTH FT	LENGTH INCHES	MEMBER TYPE	MEMBER FY1	MEMBER FY2	CONN DET LFT	CONN DET RGT	WELD NO. 1 CNO	WELD NO. 1 SIZE	CNO	SIZE	CNO	SIZE	CNO	SIZE	CNO	SIZE
C401B	36	8	C41	42	36	1	3	401	1/2	403	1/2	406	1/2	409	11/16	412	11/16
C402B	40	0	C413	42	36	3	3	412	11/16	415	11/16	418	3/4	421	3/4	424	3/4
C403B	40	0	C452	42	42	3	3	424	3/4	427	7/8	430	1-1/8	433	7/8	436	7/8
C404B	40	0	C456	36	36	3	3	436	7/8	439	7/8	442	7/8	445	3/4	448	5/8
C405B	36	8	C41	42	36	3	2	448	5/8	451	9/16	454	1/2	457	1/2	459	1/2
D401B	36	8	D41	50	36	4	6	401	11/16	403	1/2	406	9/16	409	11/16	412	11/16
D402B	40	0	D41	42	36	6	6	412	11/16	415	1/2	418	11/16	421	1/2	424	9/16
D403B	30	0	D31	60	36	6	6	424	9/16	427	11/16	430	15/16	433	13/16	-	-
D404B	40	0	D41	50	36	6	6	433	13/16	436	1/2	439	13/16	442	9/16	445	9/16
D405B	40	0	D41	36	36	6	6	445	9/16	448	1/2	451	5/8	454	1/2	457	1/2
D406B	6	8	D11	36	36	6	29	457	1/2	459	1/2	-	-	-	-	-	-
E401B	16	8	E21	36	36	43	45	401	5/16	403	5/16	406	5/16	-	-	-	-
E402B	10	0	E11	36	36	45	98	406	5/16	-	-	-	-	-	-	-	-
E403B	10	0	E11	36	36	98	46	-	-	412	5/16	-	-	-	-	-	-
E404B	40	0	E41	36	36	46	45	412	5/16	415	5/16	418	5/16	421	5/16	424	5/16
E405B	10	0	E11	36	36	45	89	424	5/16	-	-	-	-	-	-	-	-
E406B	10	0	E11	36	36	90	46	-	-	433	3/8	-	-	-	-	-	-
E407B	40	0	E41	36	36	46	14	433	3/8	436	5/16	439	5/16	442	5/16	-	-
E408B	30	0	E31	36	36	14	42	-	-	448	5/16	451	5/16	454	5/16	-	-
E409B	16	8	E21	36	36	42	41	454	5/16	-	-	459	5/16	-	-	-	-
E410B	20	0	E22	36	36	19	85	-	-	421	5/16	424	9/16	-	-	-	-
E411B	20	0	E22	42	36	86	19	433	9/16	436	5/16	-	-	-	-	-	-
F401B	16	8	F21	36	36	63	95	401	3/8	403	5/16	406	3/8	-	-	-	-
F402B	20	0	F21	36	36	97	19	412	3/8	415	5/16	-	-	-	-	-	-
F403B	40	0	F41	36	36	19	19	-	-	442	5/16	445	5/16	448	5/16	-	-
F404B	26	8	F31	36	36	19	16	-	-	454	5/16	457	3/8	459	3/8	-	-
H401B	16	8	H21	36	36	75	77	401	11/16	403	3/8	-	-	-	-	-	-
H402B	20	0	H12	36	36	77	72	-	-	-	-	-	-	-	-	-	-
H403B	40	0	H41	36	36	72	71	-	-	415	3/8	418	3/8	421	3/8	-	-
H404B	30	0	H13	36	36	71	72	-	-	-	-	-	-	-	-	-	-
H405B	40	0	H41	36	36	72	23	-	-	436	3/8	439	3/8	442	3/8	445	5/8
H406B	40	0	H41	36	36	23	68	445	5/8	448	3/8	451	3/8	454	3/8	457	5/8
H407B	6	8	H11	50	36	68	66	457	5/8	459	3/4	-	-	-	-	-	-

LICENSED PROFESSIONAL ENGINEER LESLIE E. ROBERTSON No. 34360 UNIVERSITY OF THE STATE OF NEW YORK

1-B2- 16

WORTHINGTON, SKILLING, HELLE & JACKSON — Civil & Structural Engineers

PROJECT: THE WORLD TRADE CENTER

TITLE: EXTERIOR WALL TO EL.363 - BRACING SCHEDULE

DATE: 3-31-67

REVISIONS

REV 4-24-67

MEMBER NUMBER	LENGTH FT	LENGTH INCHES	MEMBER TYPE	MEMBER FY1	MEMBER FY2	CONN DET LFT	CONN DET RGT	WELD NO. 1 CNO	WELD NO. 1 SIZE	CNO	SIZE	CNO	SIZE	CNO	SIZE	CNO	SIZE
G401B	28	8- 3/8	G21	45	36	46	19	412	5/16	415	3/8	418	3/8	-	-	-	-
G402B	28	8- 3/8	G21	42	36	19	45	418	3/8	421	3/8	424	5/16	-	-	-	-
G403B	28	8- 3/8	G22	50	36	46	19	433	3/8	436	3/8	439	5/16	-	-	-	-
G404B	28	8- 3/8	G21	36	36	19	14	439	5/16	442	3/8	445	1/2	-	-	-	-
G405B	43	0- 9/16	G34	50	36	10	19	442	9/16	445	1/2	448	3/8	451	3/8	-	-
G406B	28	8- 3/8	G21	36	36	19	39	451	3/8	454	3/8	457	5/16	-	-	-	-
G407B	14	4- 7/8	G11	36	36	56	77	403	3/8	-	-	-	-	-	-	-	-
G408B	14	4- 7/8	G11	50	36	56	95	403	3/8	-	-	-	-	-	-	-	-
G409B	14	4- 3/16	G11	36	36	56	95	403	3/8	406	3/8	-	-	-	-	-	-
G410B	14	4- 3/16	G11	36	36	56	45	403	3/8	406	5/16	-	-	-	-	-	-
G411B	14	4- 3/16	G11	36	36	34	45	403	1/2	406	5/16	-	-	-	-	-	-
G412B	14	4- 3/16	G11	36	36	46	9	412	5/16	415	1/2	-	-	-	-	-	-
G413B	14	4- 3/16	G11	42	36	10	45	421	1/2	424	5/16	-	-	-	-	-	-
G414B	14	4- 3/16	G11	36	36	46	9	433	3/8	436	1/2	-	-	-	-	-	-
G415B	14	4- 3/16	G11	36	36	14	9	445	1/2	448	1/2	-	-	-	-	-	-
G416B	14	4- 3/16	G11	42	36	10	39	454	1/2	457	5/16	-	-	-	-	-	-
G417B	28	9-13/16	G21	45	36	72	19	-	-	415	3/8	418	3/8	-	-	-	-
G418B	28	9-13/16	G21	50	36	19	71	418	3/8	421	3/8	-	-	-	-	-	-
G419B	28	9-13/16	G21	36	36	72	19	-	-	436	3/8	439	5/16	-	-	-	-
G420B	28	9-13/16	G23	50	36	19	23	439	5/16	442	3/8	445	5/8	-	-	-	-
G421B	28	9-13/16	G21	36	36	23	19	445	5/8	448	3/8	451	3/8	-	-	-	-
G422B	28	9-13/16	G23	50	36	19	68	451	3/8	454	3/8	457	5/8	-	-	-	-
G451B	12	3- 1/8	G11	36	36	43	34	401	5/16	403	1/2	-	-	-	-	-	-
G452B	12	3- 1/8	G11	36	36	43	56	401	5/16	403	3/8	-	-	-	-	-	-
G453B	12	3- 1/8	G11	36	36	63	56	401	3/8	403	3/8	-	-	-	-	-	-
G454B	12	4	G11	36	36	63	56	401	3/8	403	3/8	-	-	-	-	-	-
G455B	12	4	G11	50	36	75	56	401	11/16	403	3/8	-	-	-	-	-	-
G456B	12	3- 1/8	G11	36	36	39	29	457	5/16	459	1/2	-	-	-	-	-	-
G457B	12	3- 1/8	G11	42	36	39	55	457	5/16	459	3/8	-	-	-	-	-	-
G458B	12	3- 1/8	G11	36	36	59	55	457	3/8	459	3/8	-	-	-	-	-	-
G459B	12	4	G11	42	36	59	55	457	3/8	459	3/8	-	-	-	-	-	-
G460B	12	4	G11	36	36	68	55	457	5/8	459	3/8	-	-	-	-	-	-

LICENSED PROFESSIONAL ENGINEER
LESLIE E. ROBERTSON
No. 34360
UNIVERSITY OF THE STATE OF NEW YORK

1-B2- 17

REVISIONS

WORTHINGTON, SKILLING, HELLE & JACKSON — Civil & Structural Engineers

PROJECT: THE WORLD TRADE CENTER

TITLE: EXTERIOR WALL TO EL.363 - TRUSS SCHEDULE

DATE: 3-31-67

REV 4-24-67

(1) MEMBER NUMBER	LENGTH FT	LENGTH INCHES	(2) PLATE 1 TYPE	PLATE 1 WIDTH	PLATE 1 THICK	PLATE 1 FY1	PLATE 2 WIDTH	PLATE 2 THICK	PLATE 2 FY2	(3) CONN DET LFT	(3) CONN DET RGT	(4) WELD 1 LEFT	(4) WELD 1 RIGHT	(4) WELD 2 LEFT	(4) WELD 2 RIGHT	(5) WELD 3	(5) WELD 4
T101B	10	0	T71	24	4	42	16	1-1/2	36	81	82	-	-	-	-	1/2	3/4
T102B	18	9- 9/16	T30	42	5	42	16	2	36	78	81	7/8	-	2-3/4	-	1/2	1
T103B	16	8- 3/16	T80	15	3/4	36	16	3/4	36	81	80	-	-	-	1/2	5/16	5/8
T104B	16	8- 3/16	T80	15	3/4	36	16	3/4	36	80	82	-	-	1/2	-	5/16	5/8
T105B	18	9- 9/16	T30	42	5	50	16	2	36	82	79	-	7/8	-	2-3/4	1/2	1-1/4
T106B	30	0	T20	28	5	36	16	1-1/2	36	78	79	7/8	7/8	2-3/4	2-3/4	1/2	3/4
T201B	10	0	T70	16	3-1/2	50	16	3/4	36	89	90	-	-	-	-	1/2	3/4
T202B	22	9-11/16	T40	36	4	42	16	3/4	36	85	89	1/2	-	2	-	1/2	3/4
T203B	21	1- 3/16	T90	15	3/4	36	16	3/4	36	89	88	-	-	-	1/2	5/16	5/8
T204B	21	1- 3/16	T90	15	3/4	36	16	3/4	36	88	90	-	-	1/2	-	5/16	5/8
T205B	22	9-11/16	T40	36	4	42	16	3/4	36	90	87	-	1/2	-	2	1/2	3/4
T206B	30	0	T20	21	4	36	16	1-1/4	36	85	87	1/2	1/2	2	2	1/2	3/4
T211B	13	3- 7/16	T50	42	4	42	16	2	36	91	93	1-1/8	-	1-1/2	2	1/2	3/4
T212B	13	3- 7/16	T50	42	4	42	16	2	36	93	92	-	1-1/8	2	1-1/2	1/2	3/4
T213B	20	0	T11	30	4	36	16	2	36	91	92	1-1/8	1-1/8	1-1/2	1-1/2	1/2	3/4
T221B	22	10- 5/8	T60	32	2	50	16	3/4	36	94	98	1/2	-	1-3/8	1	3/8	3/4
T222B	22	10- 5/8	T60	32	2	50	16	3/4	36	98	96	-	1/2	1	1-3/8	3/8	3/4
T223B	20	0	T10	13	2	36	16	3/4	36	94	96	1/2	1/2	1-3/8	1-3/8	3/8	3/4
T301B	10	0	T71	24	4-3/4	45	16	1-1/2	36	181	182	-	-	-	-	1/2	3/4
T302B	18	9- 9/16	T30	40	5	50	16	2	36	83	181	1-1/4	-	2-7/8	-	1/2	1-1/4
T303B	16	8- 3/16	T80	15	3/4	36	16	3/4	36	181	80	-	-	-	1/2	5/16	5/8
T304B	16	8- 3/16	T80	15	3/4	36	16	3/4	36	80	182	-	-	1/2	-	5/16	5/8
T305B	18	9- 9/16	T30	40	5	42	16	2	36	182	84	-	1-1/4	-	2-7/8	1/2	1
T306B	30	0	T20	28	5	36	16	1-5/8	36	83	84	1-1/4	1-1/4	2-7/8	2-7/8	1/2	3/4
T401B	22	10- 5/8	T60	32	2	50	16	3/4	36	95	98	3/8	-	1-1/4	1	3/8	3/4
T402B	22	10- 5/8	T60	32	2	50	16	3/4	36	98	97	-	3/8	1	1-1/4	3/8	3/4
T403B	20	0	T10	13	2	36	16	3/4	36	95	97	3/8	3/8	1-1/4	1-1/4	3/8	3/4
T411B	10	0	T70	16	4	45	16	3/4	36	89	90	-	-	-	-	1/2	3/4
T412B	22	9-11/16	T40	36	4	45	16	3/4	36	85	89	9/16	-	2	-	1/2	3/4
T413B	21	1- 3/16	T90	15	3/4	36	16	3/4	36	89	88	-	-	-	1/2	5/16	5/8
T414B	21	1- 3/16	T90	15	3/4	36	16	3/4	36	88	90	-	-	1/2	-	5/16	5/8
T415B	22	9-11/16	T40	36	4	45	16	3/4	36	90	86	-	9/16	-	2	1/2	3/4
T416B	30	0	T20	21	4	36	16	1-1/4	36	85	86	9/16	9/16	2	2	1/2	3/4

LICENSED PROFESSIONAL ENGINEER — LESLIE E. ROBERTSON — No. 34360 — CITY OF THE STATE OF NEW YORK

(1) SEE ELEVATION DWGS. SB-125, SB-126, SB-127, SB-128 FOR LOCATION
(2) FOR TYPE DETAILS SEE 1-B2-68
(3) FOR CONNECTION DETAILS SEE 1-B2-92 THRU 99
(4) WELD 1 AND 2 (INCHES) SEE CONNECTION DETAILS FOR LOCATION
(5) WELD 3 AND 4 (INCHES) SEE TYPE DETAILS FOR LOCATION

SKILLING, HELLE, CHRISTIANSEN, ROBERTSON Structural & Civil Engineers

PROJECT THE WORLD TRADE CENTER | TITLE EXTERIOR WALL TO EL.363 - COLUMN TYPE 1000, 8000, 2000 | DATE 3-31-67.

REVISIONS
6-18-68

* REV 4-24-67

COLUMN TYPE	PLATE 1 T1	PLATE 2 T2	WELD 1	*WELD 2	PLATE 1A T1A	PLATE 2A T2A
1001	1-1/8	3/4	5/8			
1002	1-3/8	3/4	5/8			
8003	1-3/8	3/4	5/8		1-3/4	5/8
8023	1-1/8	3/4	5/8		1-7/16	5/8
2004	2-1/4	1	5/8	5/8		
2005	2-3/8	1	5/8	5/8		
2006	2-5/8	1-1/8	5/8	3/4		
2007	3-1/4	1-3/8	5/8	3/4		
2008	3-3/8	1-3/8	5/8	1		
2009	3-3/8	1-1/2	11/16	1		
2010	3-1/2	1-1/2	11/16	1		
2011	3-5/8	1-1/2	11/16	1		
2013	4-1/4	1-7/8	3/4	1		
*2014	4-1/4	2-1/2	1-3/8	1-3/8		
*2015	4-1/2	2-1/2	1-1/2	1-1/2		
2016	4-3/4	2-1/4	3/4	1-1/8		
2017	5	2-3/4	7/8	1-1/8		
2018	5	2-7/8	7/8	1-1/8		
2019	5	3	7/8	1-1/8		
*2020	6	5	1-1/2	1-1/2		
*2021	6	5-3/8	1-1/2	1-1/2		
2022	4	3-3/4	1	1		
1024	1-3/16	13/16	11/16			
1025	1-1/2	13/16	11/16			

1-82- 19

WORTHINGTON, SKILLING, HELLE & JACKSON — Civil & Structural Engineers

PROJECT THE WORLD TRADE CENTER | TITLE EXT. WALL TO EL. 363 - COLUMN TYPE 1000 | DATE 3-31-67

REVISIONS

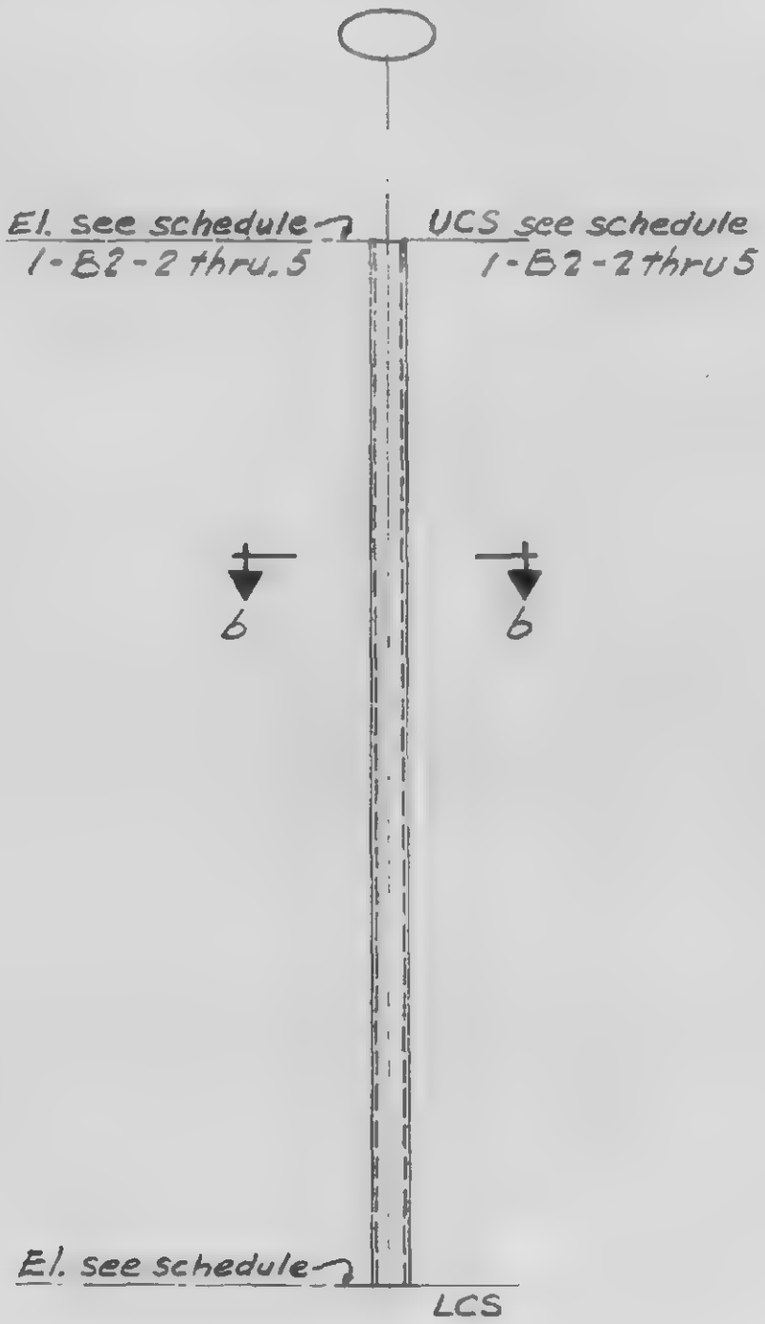

Elevation

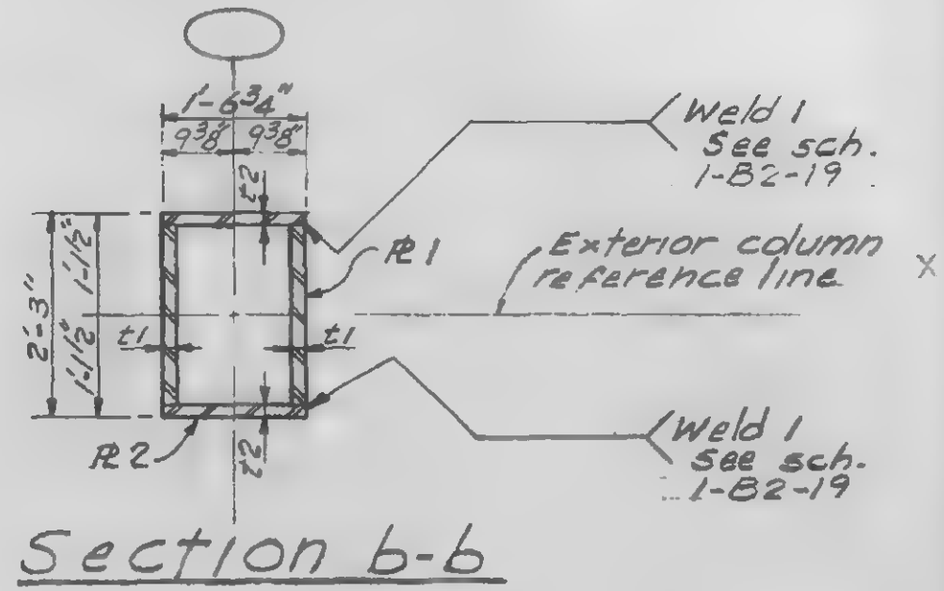

Section 6-6

LICENSED PROFESSIONAL ENGINEER
LESLIE E. ROBERTSON
No. 34360
UNIVERSITY OF THE STATE OF NEW YORK

COLUMN TYPE 1001 & 1002

1-B2-20

WORTHINGTON, SKILLING, HELLE & JACKSON — Civil & Structural Engineers

PROJECT THE WORLD TRADE CENTER | TITLE EXT. WALL TO EL. 363'-COLUMN TYPE 8000 | DATE 3-31-67

REVISIONS

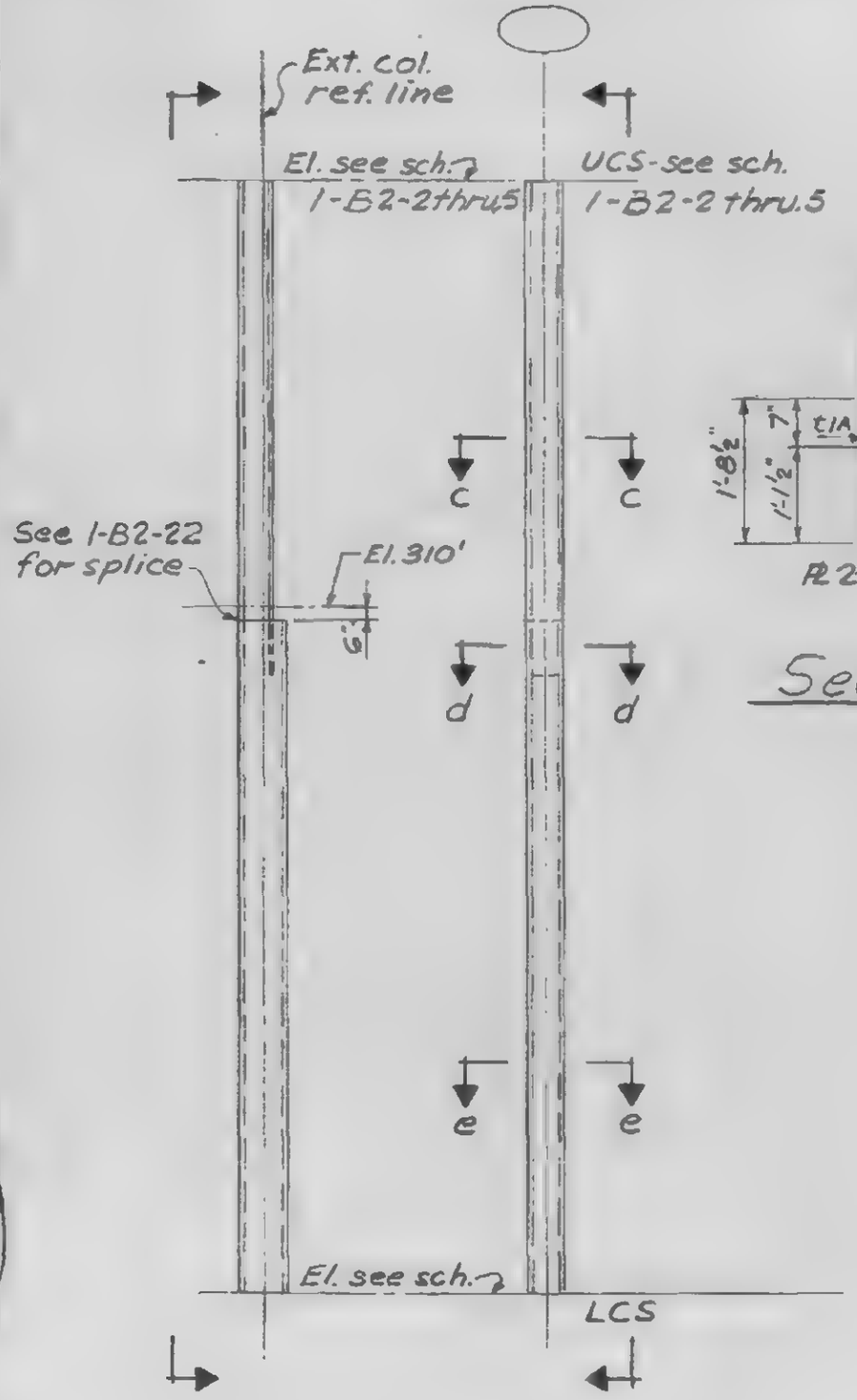

Elev. a-a Elev. b-b

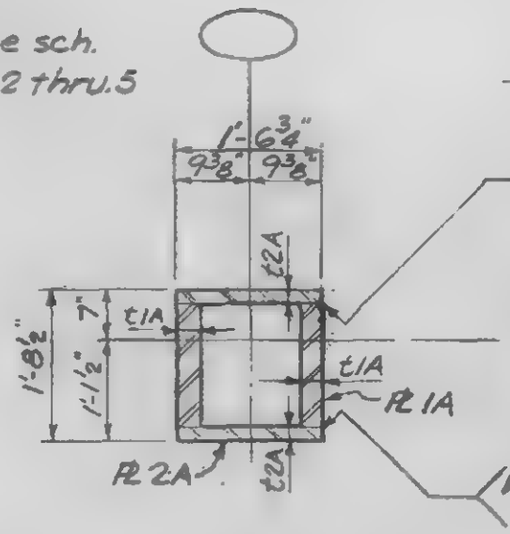

Section c-c

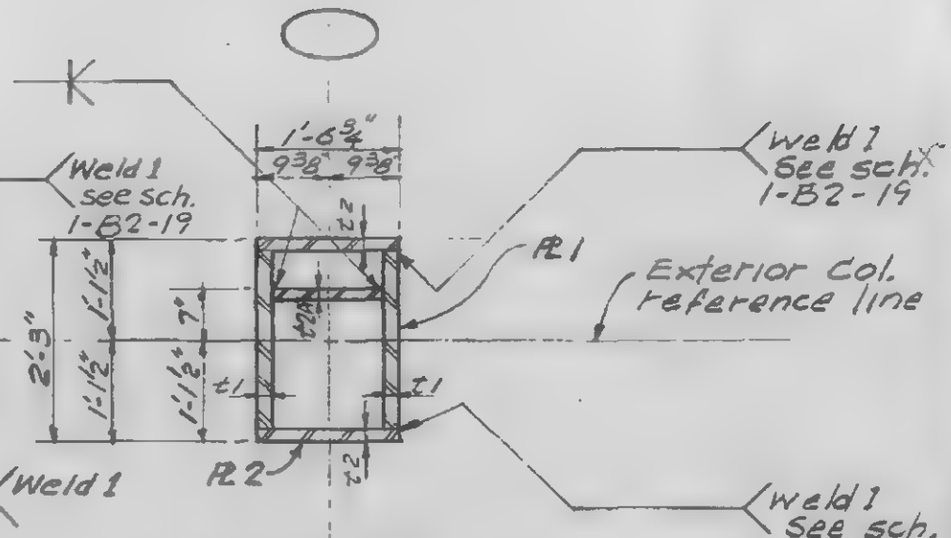

Section d-d

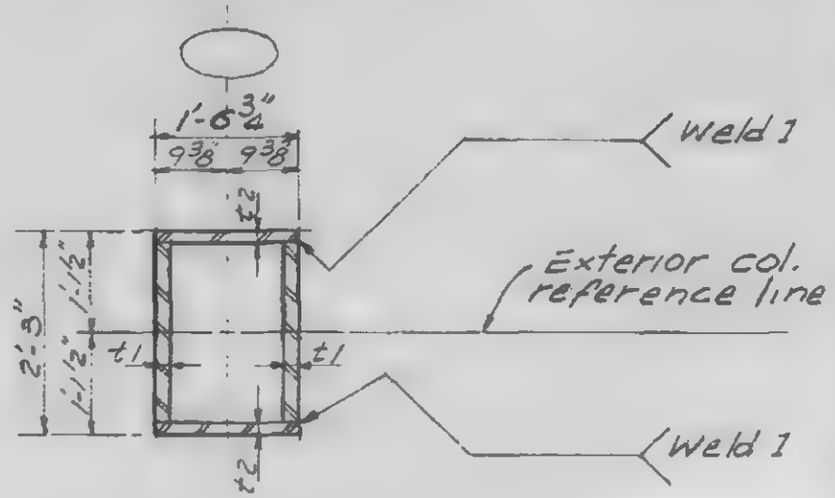

Section e-e

COLUMN TYPE 8003 & 8023

1-B2-21

LICENSED PROFESSIONAL ENGINEER LESLIE E. ROBERTSON No. 34360 UNIVERSITY OF THE STATE OF NEW YORK

WORTHINGTON, SKILLING, HELLE & JACKSON — Civil & Structural Engineers

PROJECT THE WORLD TRADE CENTER | TITLE EXT. WALL TO EL 363'- COLUMN TYPE 8000 | DATE 3-31-67

REVISIONS

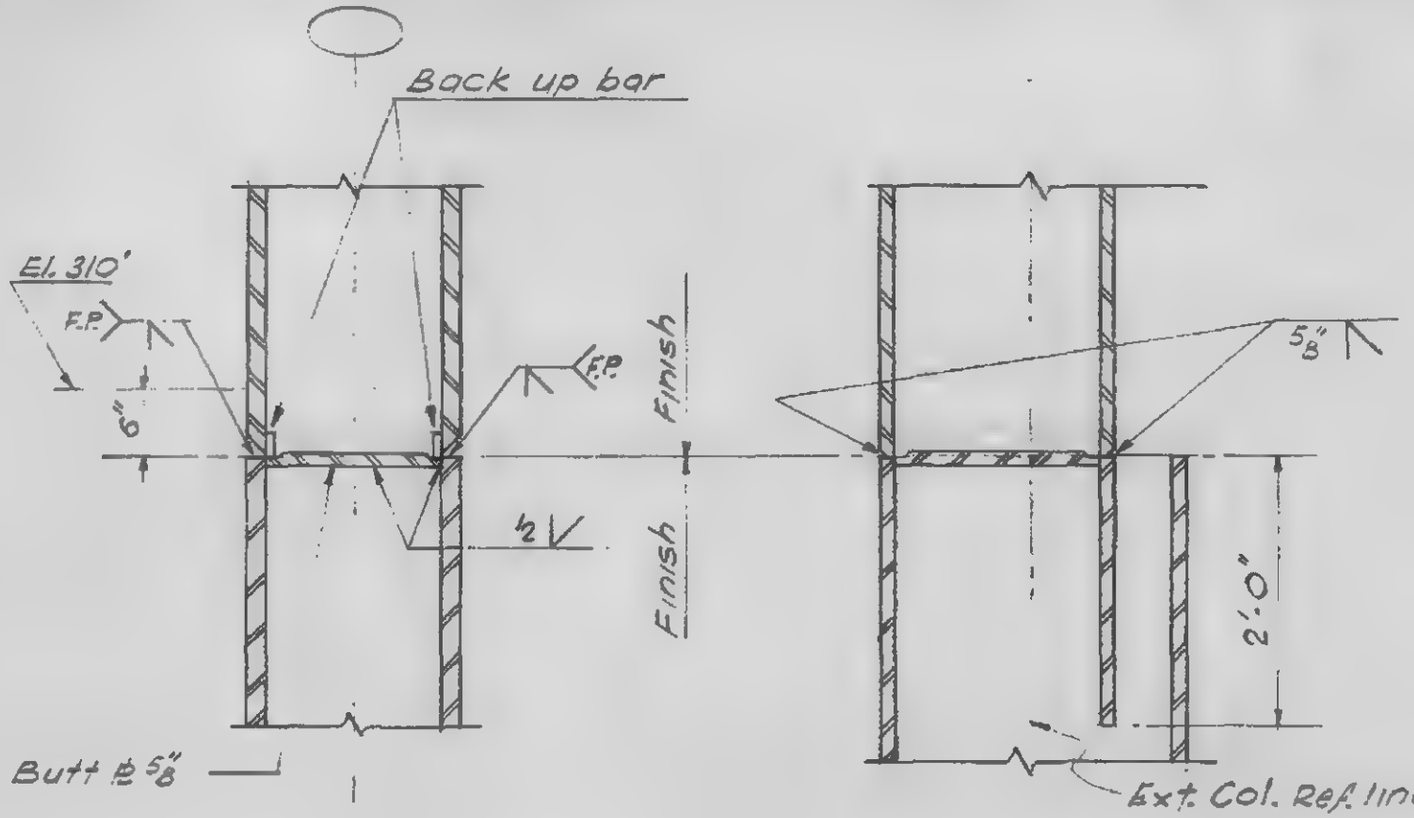

Section a-a

Section b-b

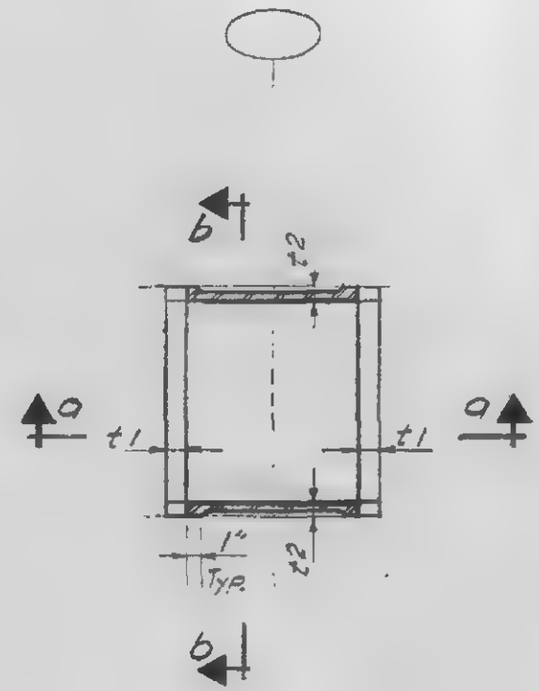

Plan
Weld preparation

SPLICE DETAIL

LESLIE E. ROBERTSON — REGISTERED PROFESSIONAL ENGINEER — No. 34360 — UNIVERSITY OF THE STATE OF NEW YORK

1-B2-22

WORTHINGTON, SKILLING, HELLE & JACKSON Civil & Structural Engineers

PROJECT THE WORLD TRADE CENTER | TITLE EXT. WALL TO EL. 363' - COLUMN TYPE 2000 | DATE 3-31-67

REVISIONS

4-24-67

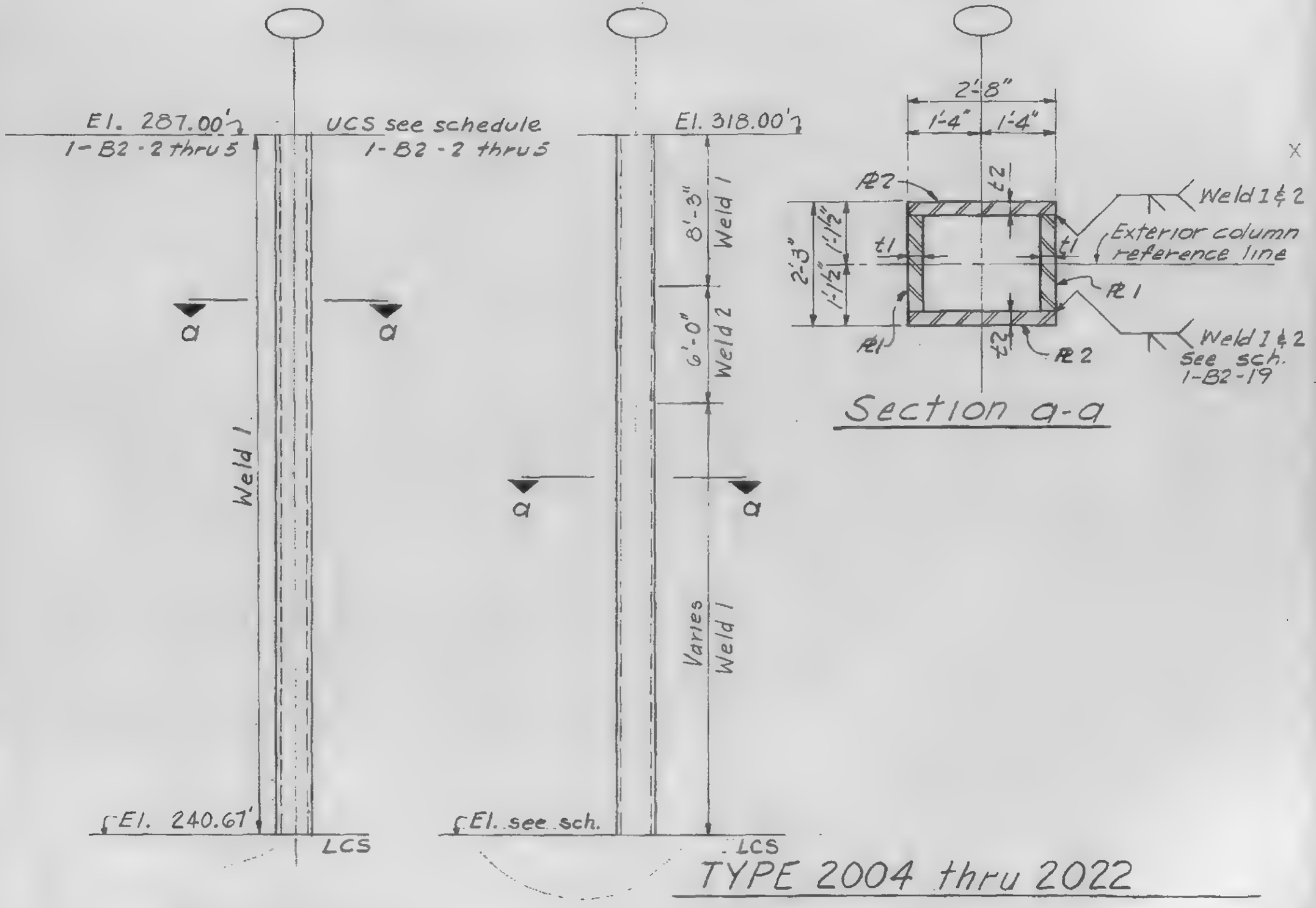

Section a-a

Elevation

TYPE 2004 thru 2022

LICENSED PROFESSIONAL ENGINEER
LESLIE E. ROBERTSON
No. 34360
UNIVERSITY OF THE STATE OF NEW YORK

1-B2-23

WORTHINGTON, SKILLING, HELLE & JACKSON — Civil & Structural Engineers

PROJECT THE WORLD TRADE CENTER | TITLE EXT. WALL TO EL.363 - COLUMN TYPE 3000, 4000 | DATE 3-31-67

REVISIONS

COLUMN TYPE	PLATE 1 T1 (IN)	PLATE 2 T2 (IN)	WELD 1 (IN)	WELD 2 (IN)	PLATE 3 T3 (IN)	PLATE 3 WIDTH	WELD 3 (IN)	WELD 4 (IN)	PLATE 4 T4 (IN)	PLATE 4 WIDTH	WELD 5 (IN)
3005	2-3/8	1	5/8	1	1-3/4	28	1/2	1	-		-
3006	2-5/8	1-1/8	5/8	1-1/8	1-3/4	28	1/2	1	-		-
3106	2-5/8	1-1/8	5/8	1-1/8	2	28	1/2	1	-		-
3208	3-3/8	1-3/8	5/8	1-3/8	4-1/2	28	3/4	1-1/4	-		-
3311	3-5/8	1-1/2	11/16	1-1/2	2-1/4	28	1/2	1	-		-
3012	4	2-3/8	13/16	2-3/8	1-3/4	28	1/2	1	-		-
4017	5	2-3/4	7/8	2-3/4	5	29	3/4	1-1/4	2-1/4	18	1/2
4119	5	3	7/8	3	5	29	3/4	1-1/4	2-1/2	18	1/2

LICENSED PROFESSIONAL ENGINEER
LESLIE E. ROBERTSON
No. 34360
CITY OF THE STATE OF NEW YORK

1-82- 24

WORTHINGTON, SKILLING, HELLE & JACKSON — Civil & Structural Engineers

PROJECT THE WORLD TRADE CENTER | TITLE EXTERIOR WALL TO EL. 363 - COLUMN TYPE 3000 | DATE 3-31-67

REVISIONS

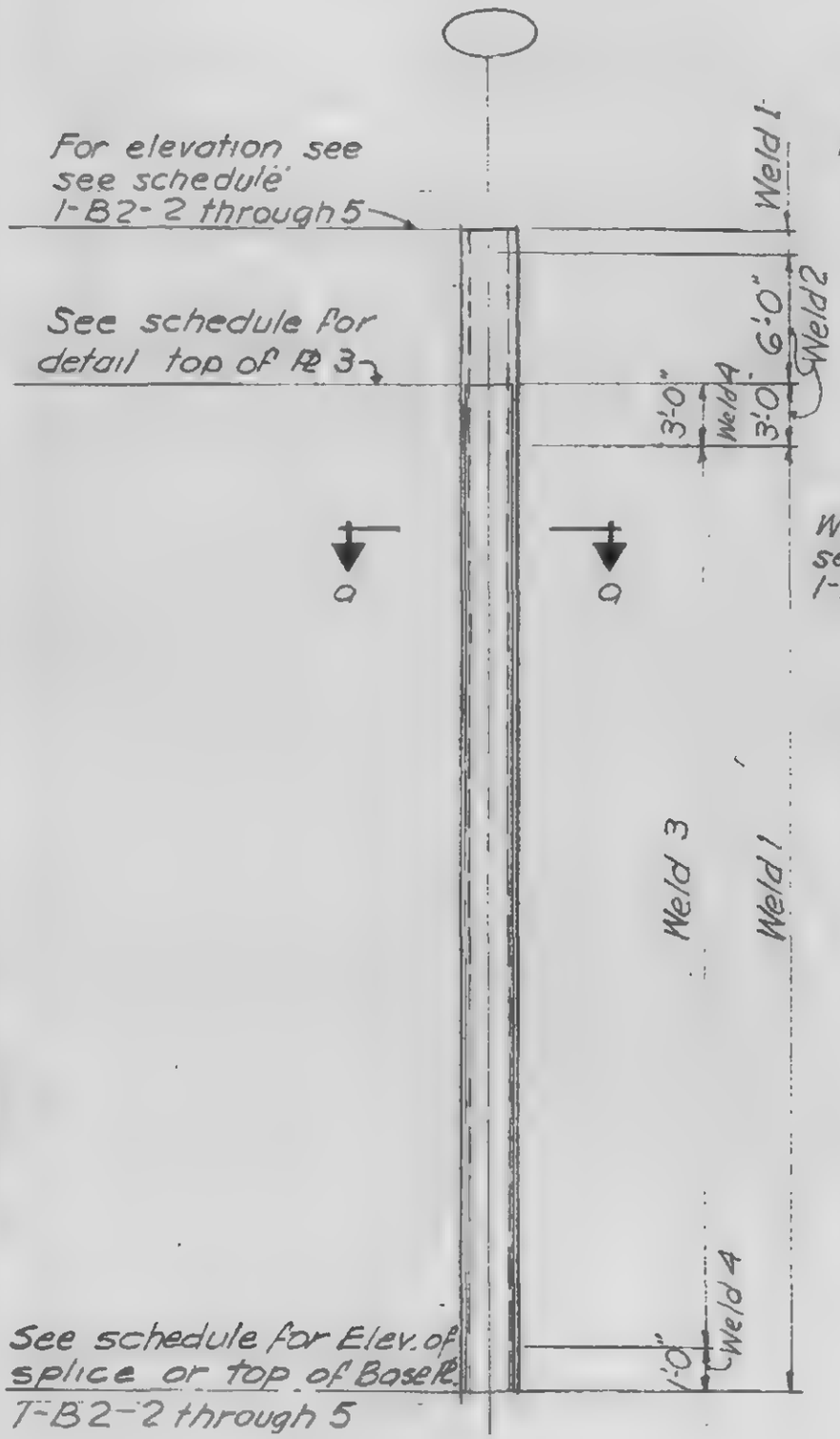

Elevation

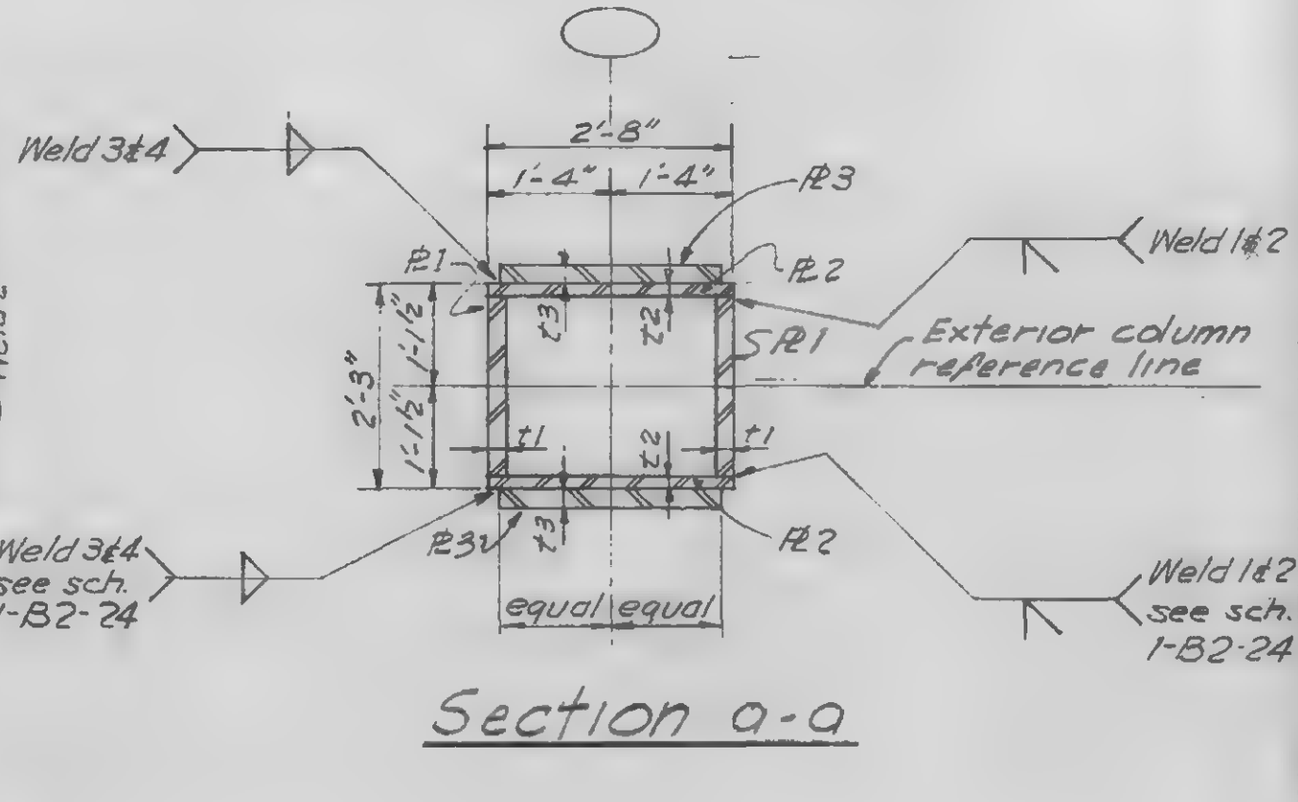

Section a-a

LICENSED PROFESSIONAL ENGINEER
LESLIE E. ROBERTSON
No. 34360
UNIVERSITY OF THE STATE OF NEW YORK

1-B2-25

WORTHINGTON, SKILLING, HELLE & JACKSON — Civil & Structural Engineers

PROJECT THE WORLD TRADE CENTER | TITLE EXT. WALL TO EL. 363'- COLUMN TYPE 4000 | DATE 3-31-67

REVISIONS

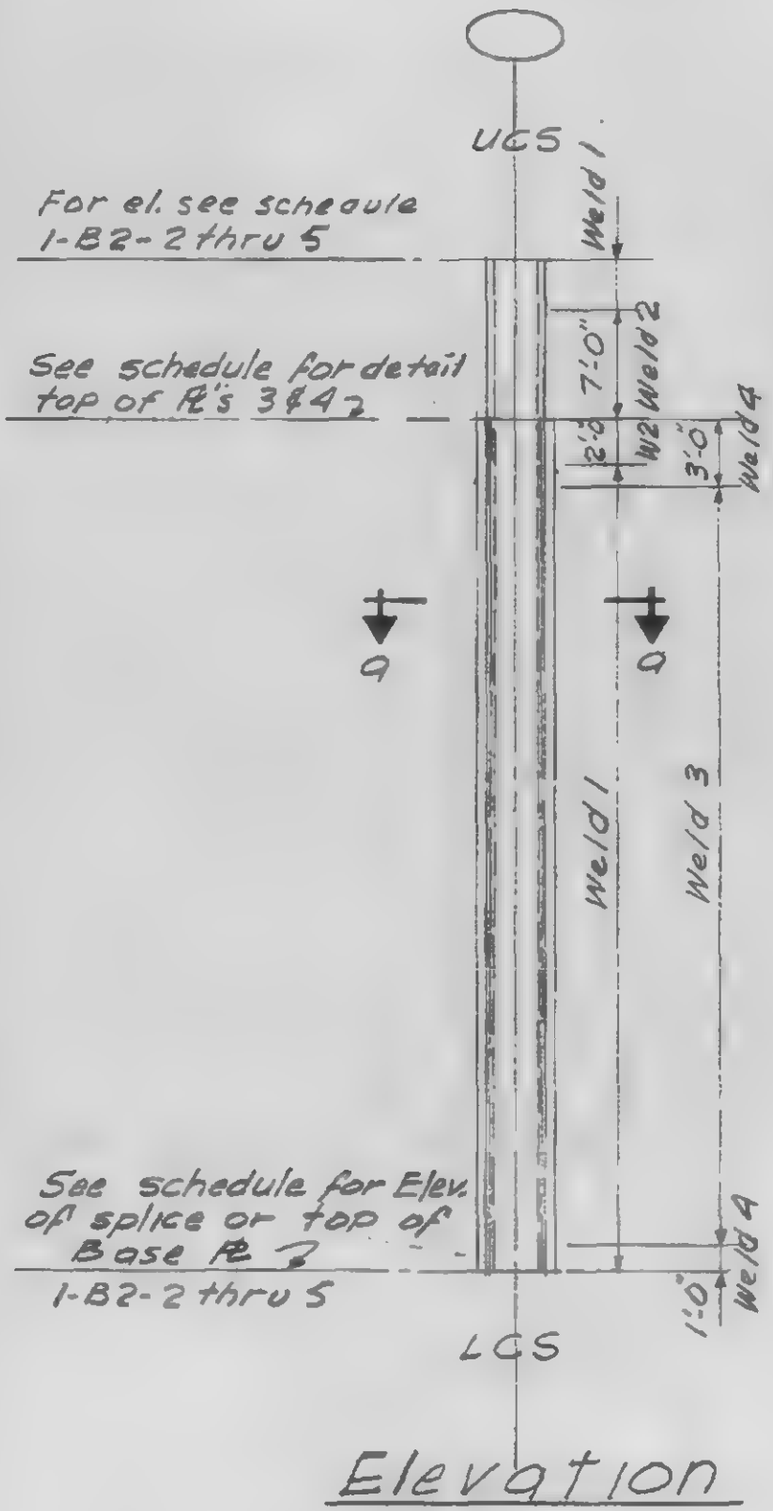

Elevation

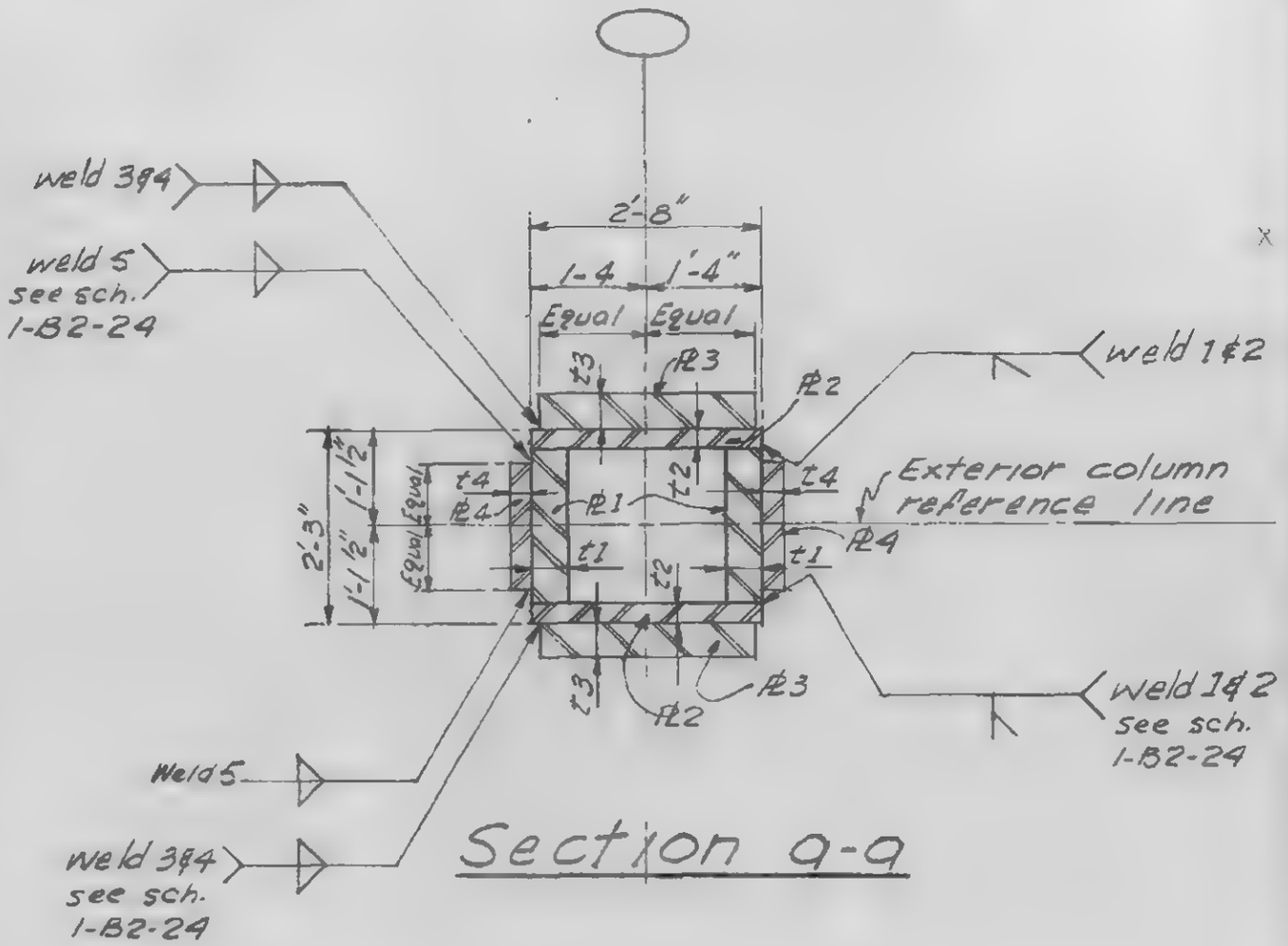

Section 9-9

1-B2-26

SKILLING, HELLE, CHRISTIANSEN, ROBERTSON — Structural & Civil Engineers

PROJECT: THE WORLD TRADE CENTER | TITLE: EXTERIOR WALL TO EL.363 - COLUMN TYPE 5000, 6000, 7000 | DATE: 3-31-67

REVISIONS: 6-18-68

* REV 4-24-67

COLUMN TYPE	PLATE 1 T1	PLATE 2 T2	PLATE 5 T5	PLATE 6 T6	PLATE 7 T7	PLATE 8 T8	PLATE 9 T9	PLATE 10 T10	WELD 1	*WELD 2	*WELD 7
5001	1-7/16	5/8	2-1/4	2-1/2	2-1/2	2	2	1-5/8	5/8	1-1/8	-
5003	1-3/4	5/8	2-1/4	2-1/2	2-1/2	2	2	1-5/8	5/8	1-1/8	-
6004	2-1/4	1	2-1/4	2-1/2	2-1/2	2	2	1-5/8	5/8	1-1/8	-
6009	3-3/8	1-1/2	2-1/4	2-1/2	2-1/2	2	2	1-3/8	11/16	1-1/4	-
7005	2-3/8	1	2-1/4	2-1/2	2-1/2	2	2	1-1/2	5/8	1-1/8	3/4
7006	2-5/8	1-1/8	2-1/4	2-1/2	2-1/2	2	2	1-3/8	5/8	1-1/4	3/4
7007	3-1/4	1-3/8	2-1/4	2-1/2	2-1/2	2	2	1-3/8	5/8	1-3/8	3/4
7008	3-3/8	1-3/8	2-1/4	2-1/2	2-1/2	2	2	1-3/8	5/8	1-1/2	3/4
7010	3-1/2	1-1/2	2-1/4	2-1/2	2-1/2	2	2	1-3/8	11/16	1-1/2	3/4
7011	3-5/8	1-1/2	2-1/4	2-1/2	2-1/2	2	2	1-1/2	11/16	1-1/2	3/4
7013	4-1/4	1-7/8	2-1/4	2-1/2	2-1/2	2	2	1-1/4	3/4	1-3/8	3/4
7114	4-1/4	2-1/2	2-1/2	2-1/4	2-1/4	2	2	1-1/4	13/16	1-3/8	3/4
7115	4-1/2	2-1/2	2-1/2	2-1/4	2-1/4	2	2	1-3/8	13/16	1-5/8	3/4
7016	4-3/4	2-1/4	2-1/4	2-1/2	2-1/2	2	2	1-1/4	3/4	1-1/2	3/4
7217	5	2-3/4	2-3/4	2	2	2	2	1-3/8	7/8	1-3/4	3/4
7318	5	2-7/8	2-7/8	1-7/8	1-7/8	2	2	1-3/8	7/8	1-7/8	7/8
*7419	5	3	3	1-3/4	1-3/4	2	2	1-1/2	7/8	1-7/8	1
7020	6	5	2-1/4	2-1/2	2-1/2	2	2	2	1-1/8	1-1/2	F.P.
7021	6	5-3/8	2-1/4	2-1/2	2-1/2	2	2	2	1-1/8	1-1/2	F.P.
5022	1-9/16	11/16	2-1/4	2-1/2	2-1/2	2	2	1-5/8	11/16	1-1/8	
5023	1-7/8	11/16	2-1/4	2-1/2	2-1/2	2	2	1-5/8	11/16	1-1/8	
6024	3-9/16	1-5/8	2-1/4	2-1/2	2-1/2	2	2	1-3/8	3/4	1-1/4	
7025	2-1/2	1-1/16	2-1/4	2-1/2	2-1/2	2	2	1-1/2	11/16	1-1/8	3/4
7026	2-13/16	1-1/8	2-1/4	2-1/2	2-1/2	2	2	1-3/8	11/16	1-1/4	3/4
7027	3-7/16	1-1/2	2-1/4	2-1/2	2-1/2	2	2	1-3/8	11/16	1-3/8	3/4
7028	3-13/16	1-5/8	2-1/4	2-1/2	2-1/2	2	2	1-1/2	3/4	1-1/2	3/4

No. 5435 OF THE STATE OF NEW YORK

WORTHINGTON, SKILLING, HELLE & JACKSON — Civil & Structural Engineers

PROJECT: THE WORLD TRADE CENTER | TITLE: EXT. WALL TO EL. 363 - COLUMN TYPE 5000 | DATE: 3-31-67

REVISIONS

6-18-68

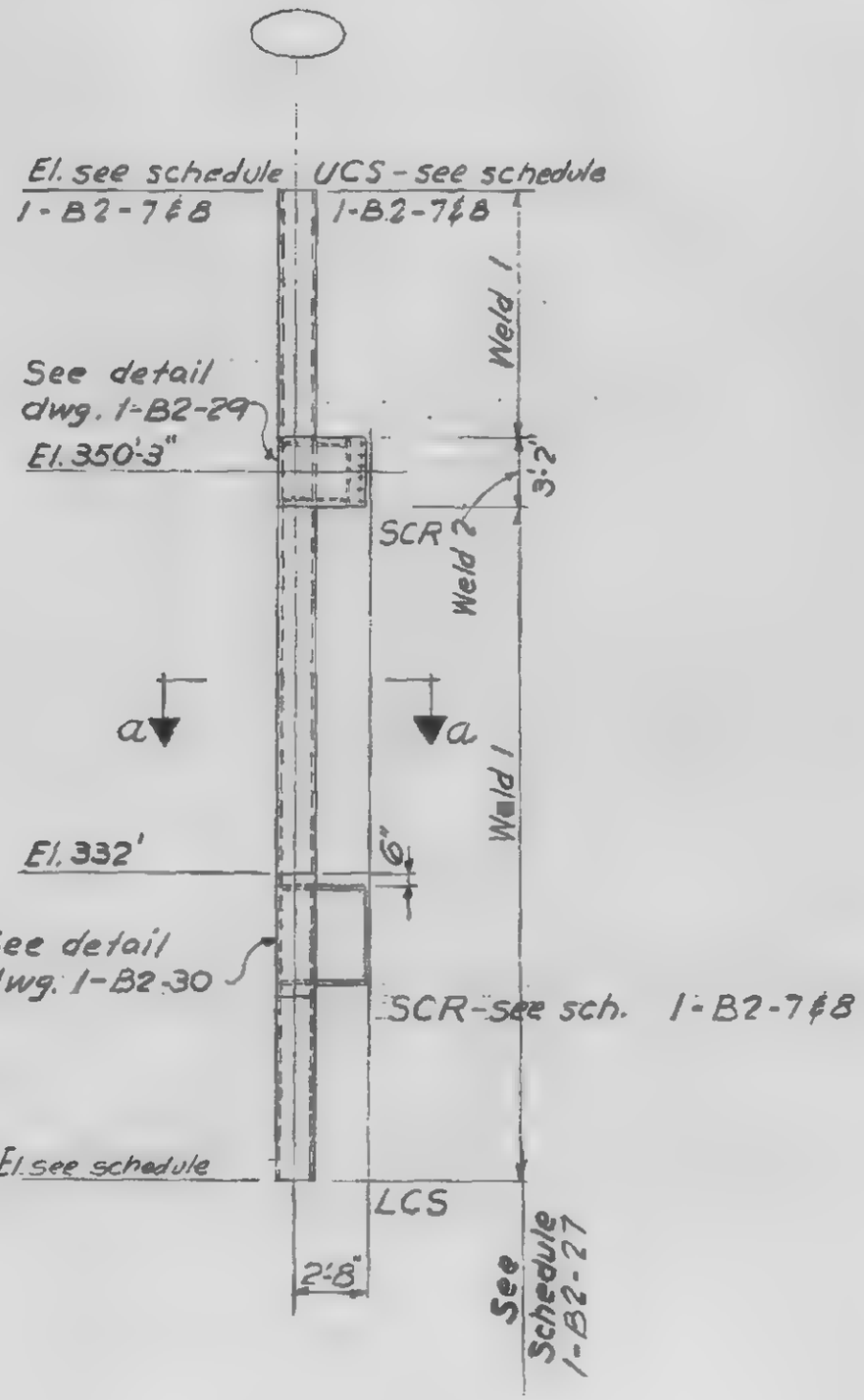

Elevation

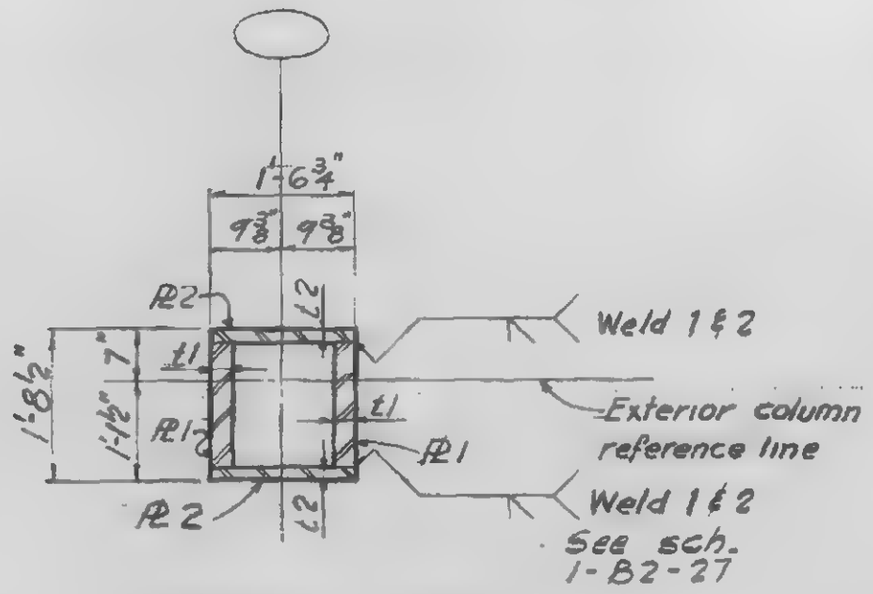

Section a-a

LICENSED PROFESSIONAL ENGINEER
LESLIE E. ROBERTSON
No. 34360
UNIVERSITY OF THE STATE OF NEW YORK

COLUMN TYPE 5001, 5003, 5022 & 5023

1-B2-28

WORTHINGTON, SKILLING, HELLE & JACKSON — Civil & Structural Engineers

PROJECT: THE WORLD TRADE CENTER | TITLE: EXT. WALL TO EL. 363-COLUMN TYPE 5000 | DATE: 3-31-67

REVISIONS

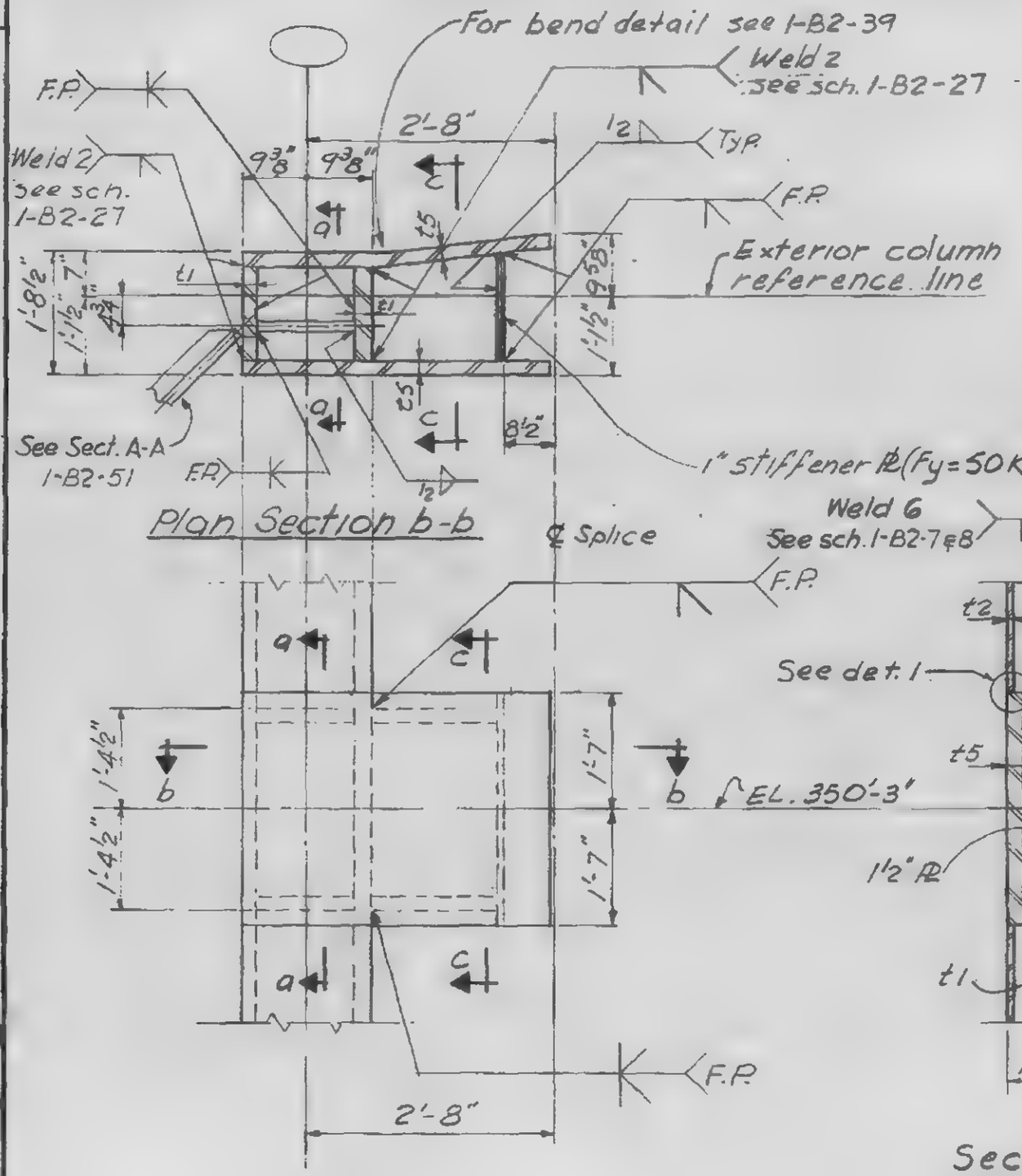

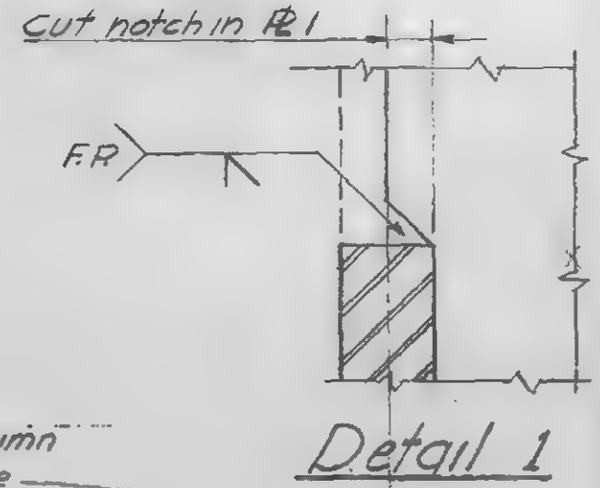

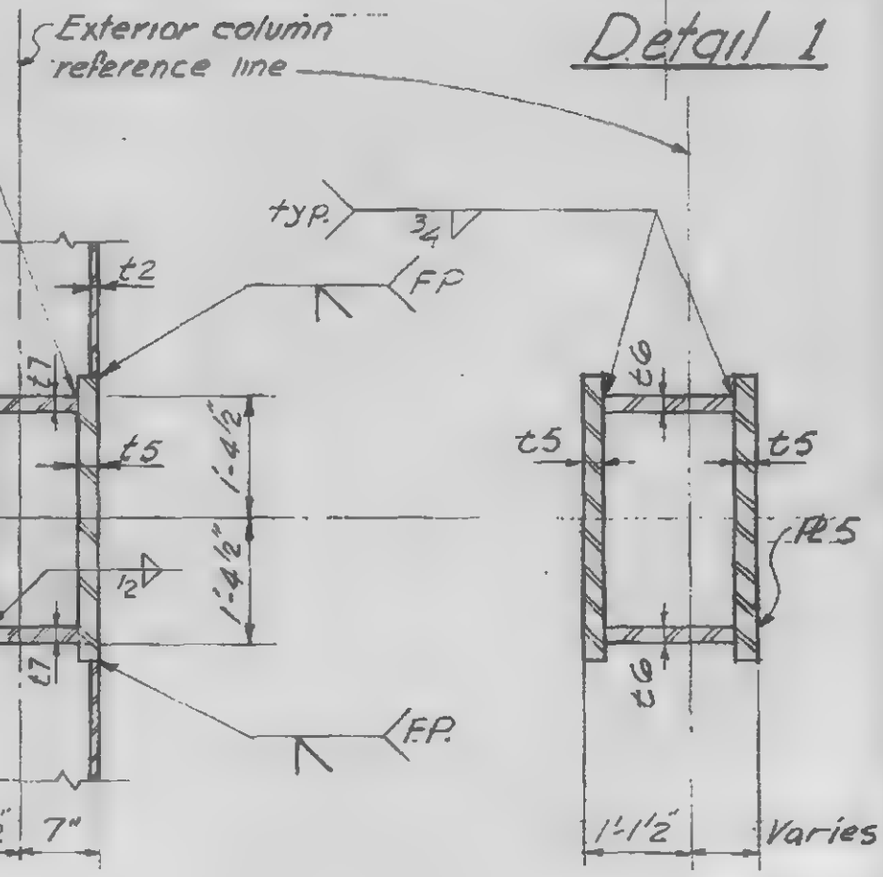

Note: Column Pl 1 material shall be free of laminations within 2'-2" of the ℄ of the spandrel.

SPANDREL AT EL. 350 DETAILS

1-B2-29

LICENSED PROFESSIONAL ENGINEER — LESLIE E. ROBERTSON — No. 34360 — UNIVERSITY OF THE STATE OF NEW YORK

WORTHINGTON, SKILLING, HELLE & JACKSON — Civil & Structural Engineers

PROJECT THE WORLD TRADE CENTER | TITLE EXT. WALL TO EL. 363 - COLUMN TYPE 5000 | DATE 3-31-67

REVISIONS

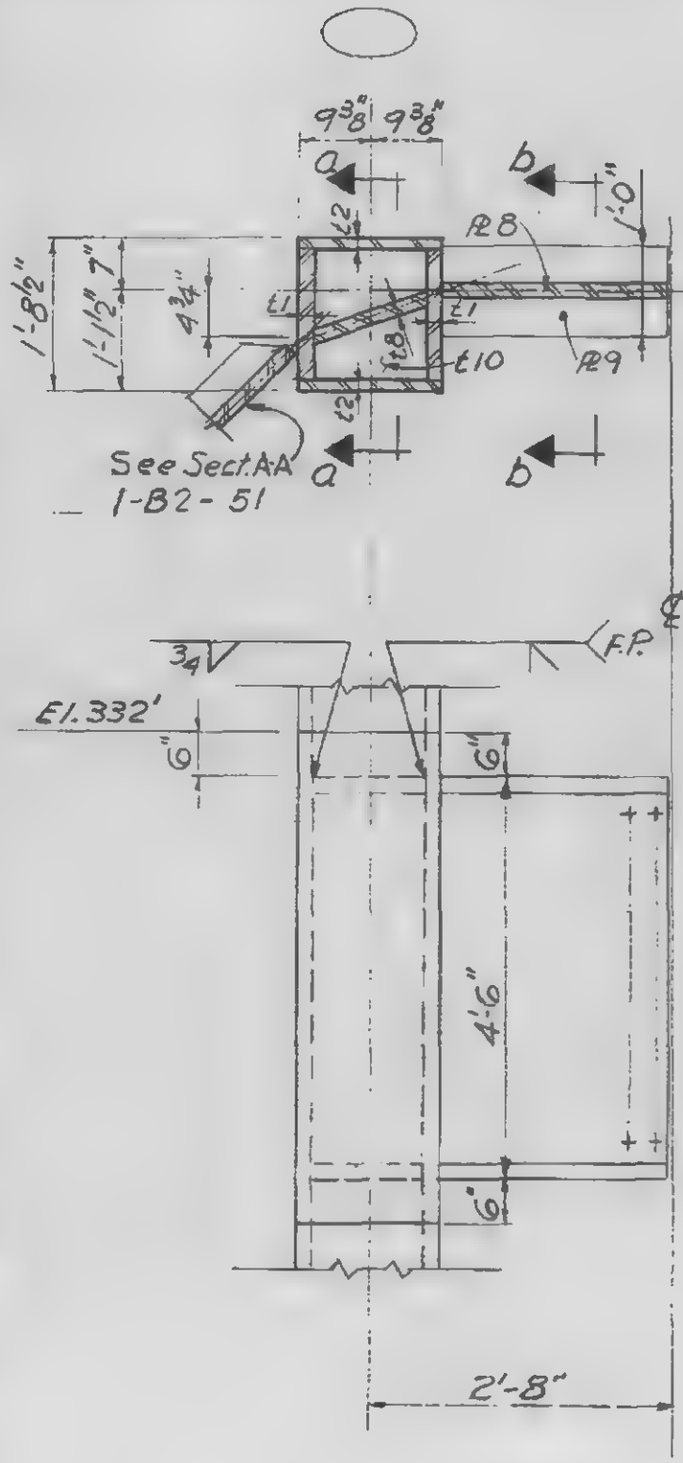

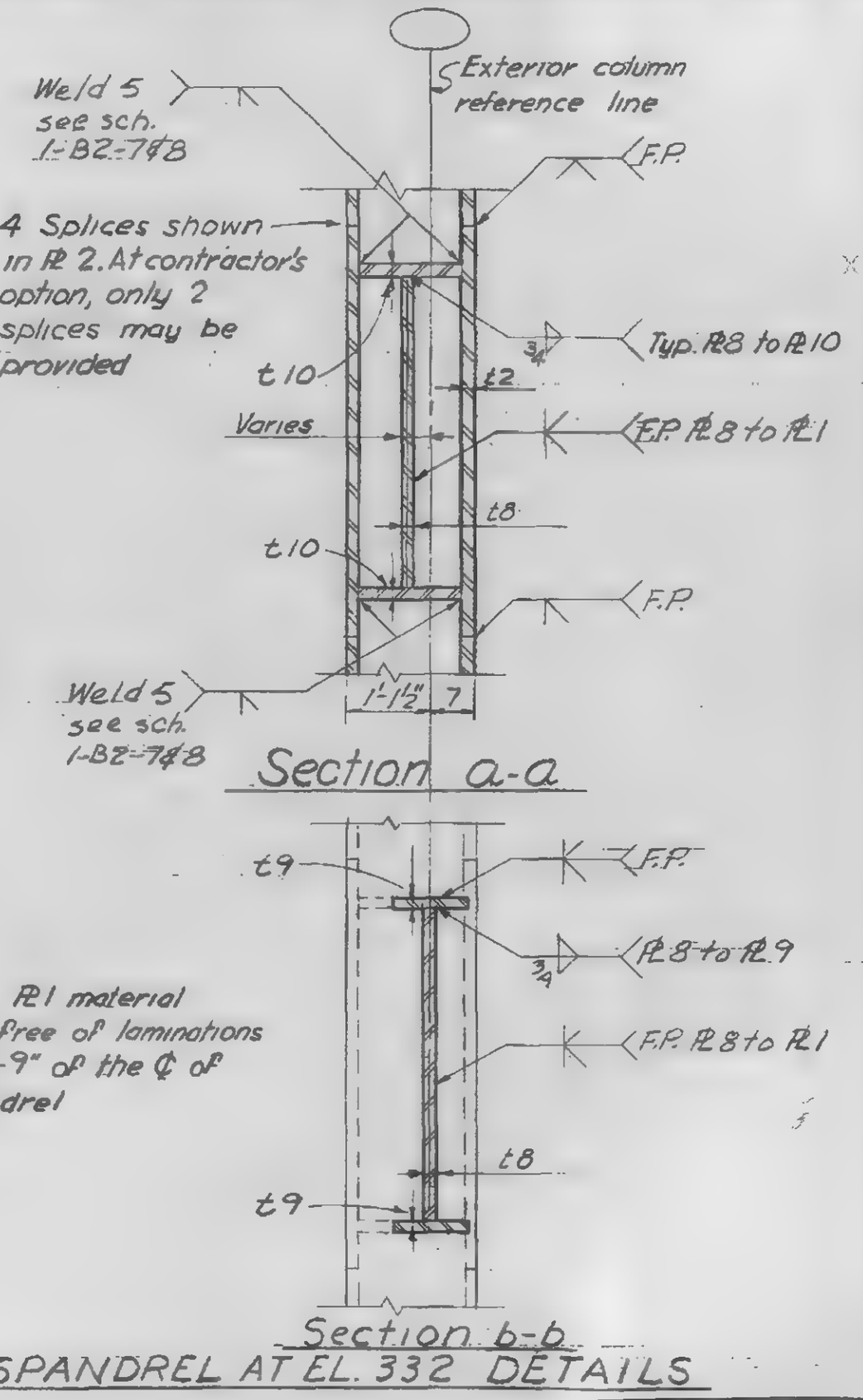

Note: 4 Splices shown in PL 2. At contractor's option, only 2 splices may be provided

NOTE
Column PL1 material shall be free of laminations within 2'-9" of the ¢ of the spandrel

SPANDREL AT EL. 332 DETAILS

1-B2-30

LICENSED PROFESSIONAL ENGINEER
LESLIE E. ROBERTSON
No. 34360
UNIVERSITY OF THE STATE OF NEW YORK

WORTHINGTON, SKILLING, HELLE & JACKSON — Civil & Structural Engineers

PROJECT THE WORLD TRADE CENTER | TITLE EXT. WALL TO EL. 363' - COLUMN TYPE 6000 | DATE 3-31-67

REVISIONS

6-18-68

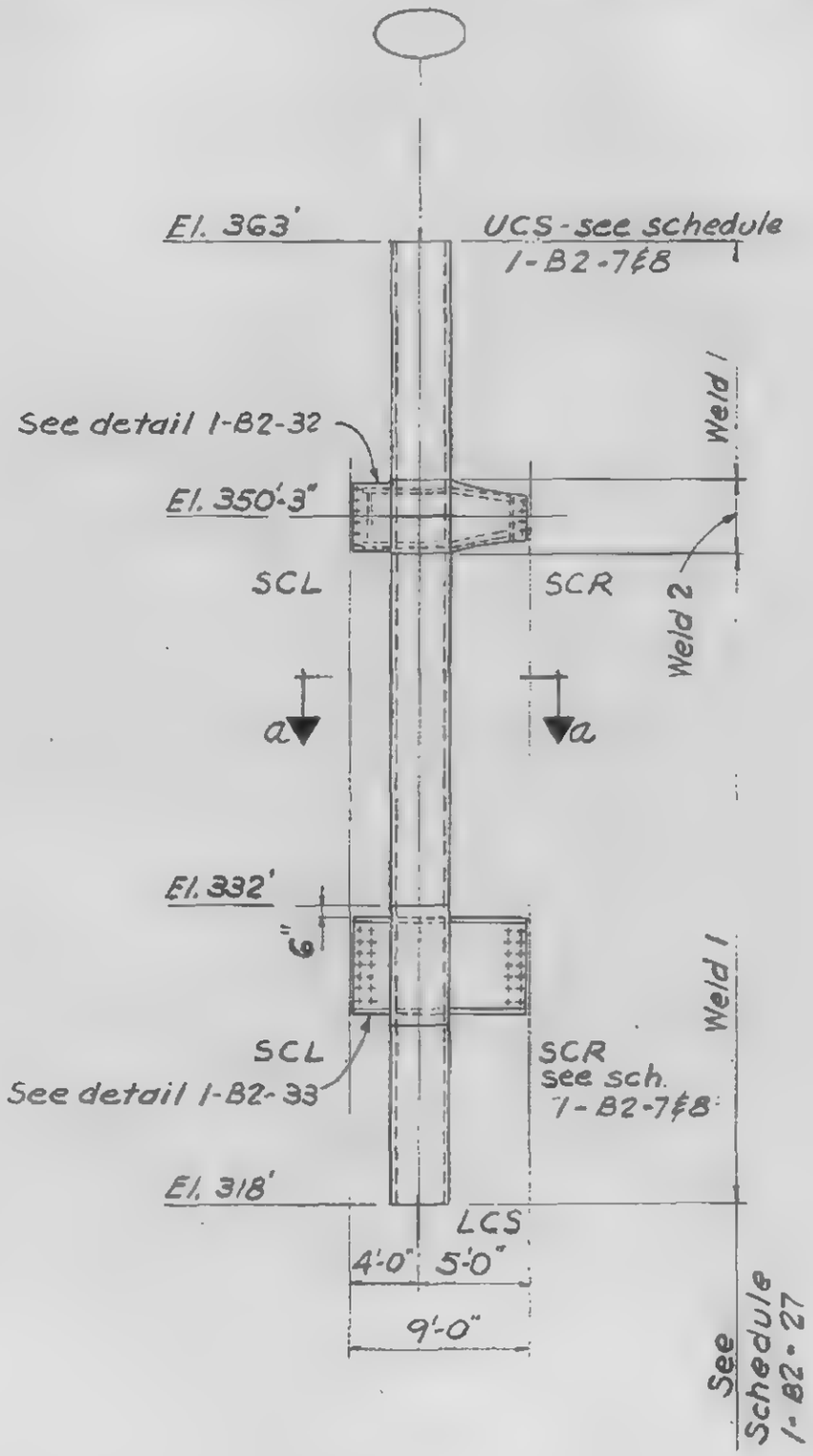

Elevation

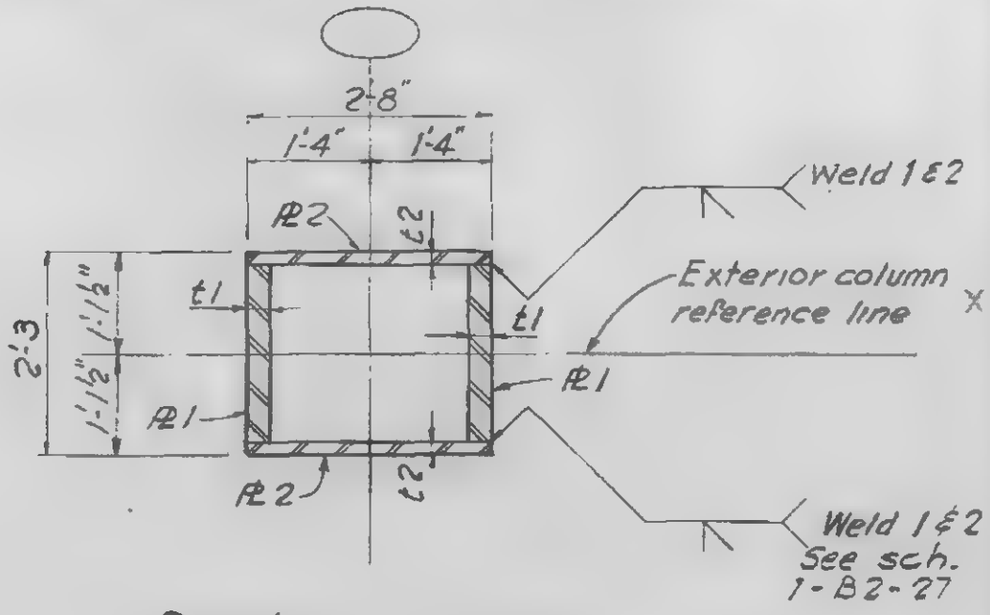

Section a-a

COLUMN TYPES 6004, 6009

& 6024

1-B2-31

LICENSED PROFESSIONAL ENGINEER
LESLIE E. ROBERTSON
No. 34360
UNIVERSITY OF THE STATE OF NEW YORK

WORTHINGTON, SKILLING, HELLE & JACKSON — Civil & Structural Engineers

PROJECT: THE WORLD TRADE CENTER | TITLE: EXT. WALL TO EL. 363' - COLUMN TYPE 6000 | DATE: 3-31-67

REVISIONS

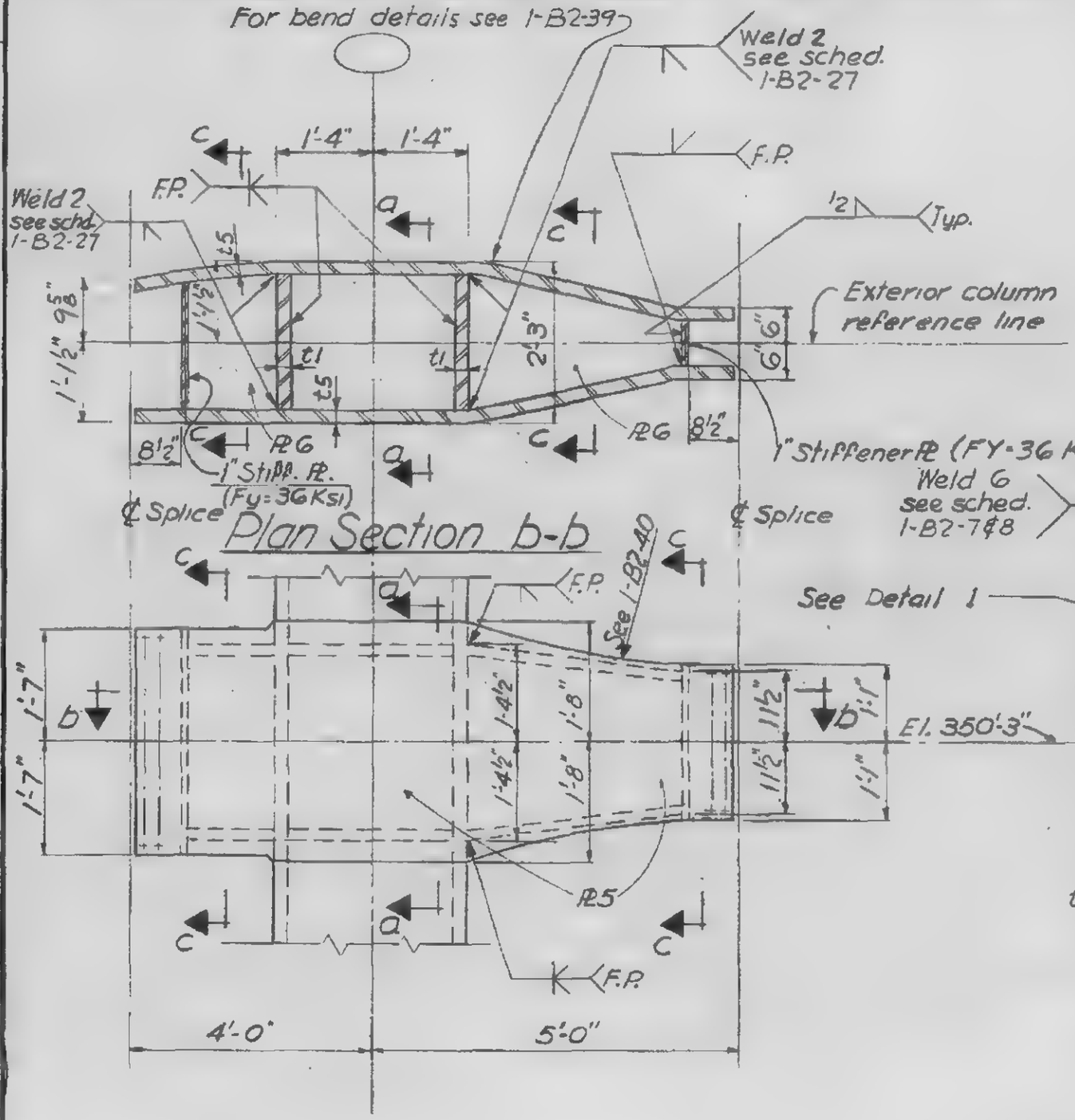

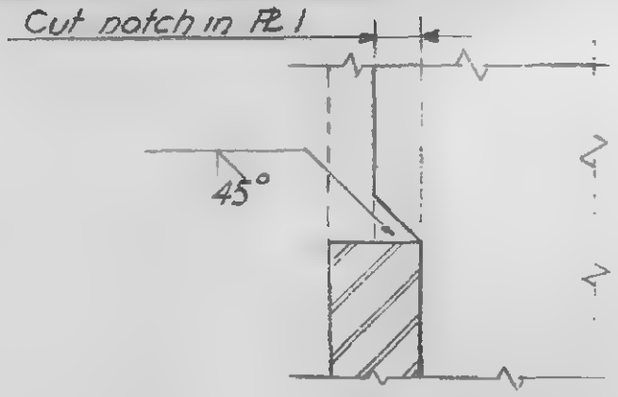

Detail 1

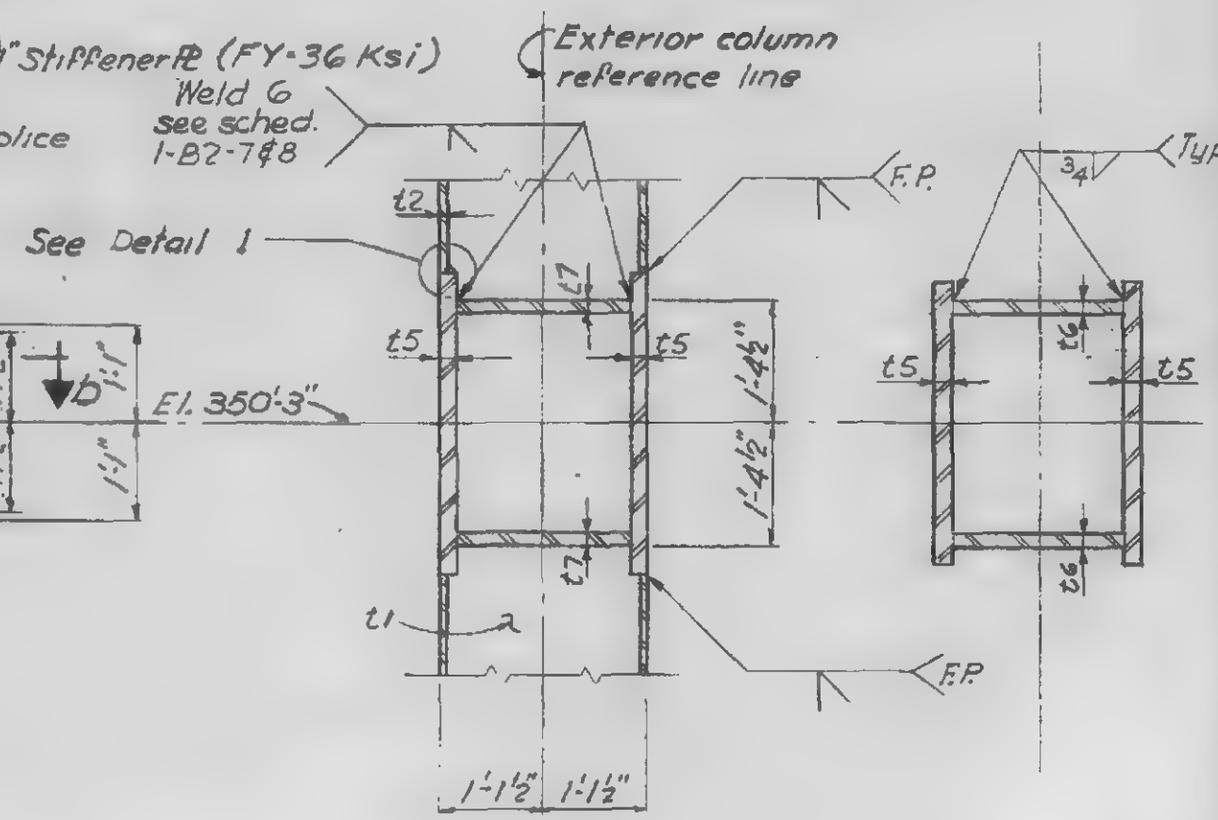

Section a-a

Section c-c

Note: Column Pl 1 material shall be free of laminations within 2'-2" of the ℄ of the spandrel.

SPANDREL AT EL. 350' DETAILS

1-B2-32

LICENSED PROFESSIONAL ENGINEER — LESLIE E. ROBERTSON — No. 34360 — UNIVERSITY OF THE STATE OF NEW YORK

188

WORTHINGTON, SKILLING, HELLE & JACKSON — Civil & Structural Engineers

PROJECT: THE WORLD TRADE CENTER | TITLE: EXT. WALL TO EL. 363' - COLUMN TYPE 6000 | DATE: 3-31-67

REVISIONS

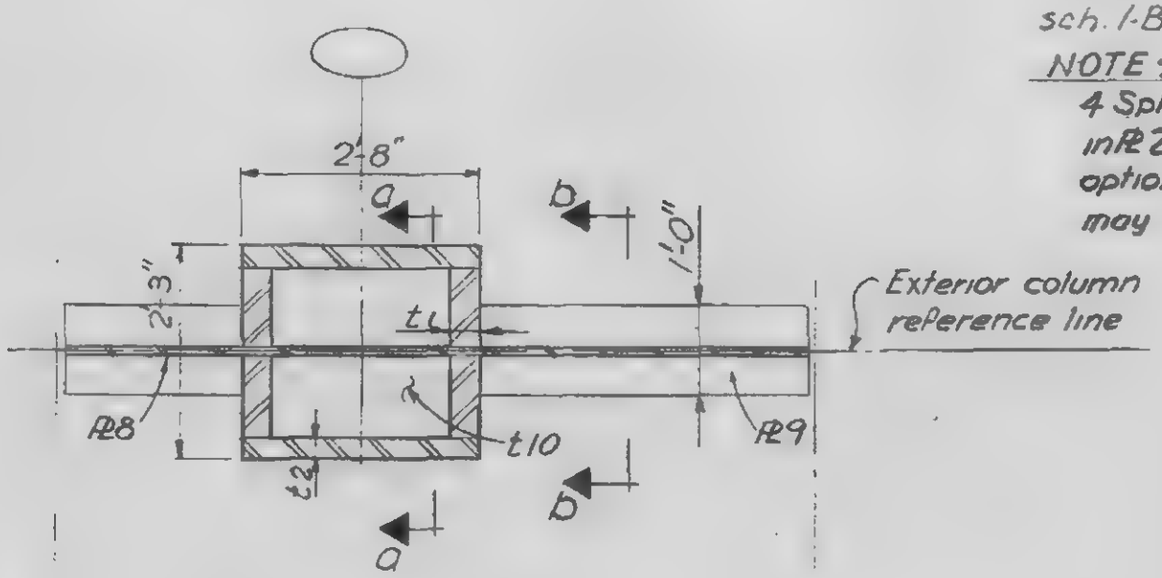

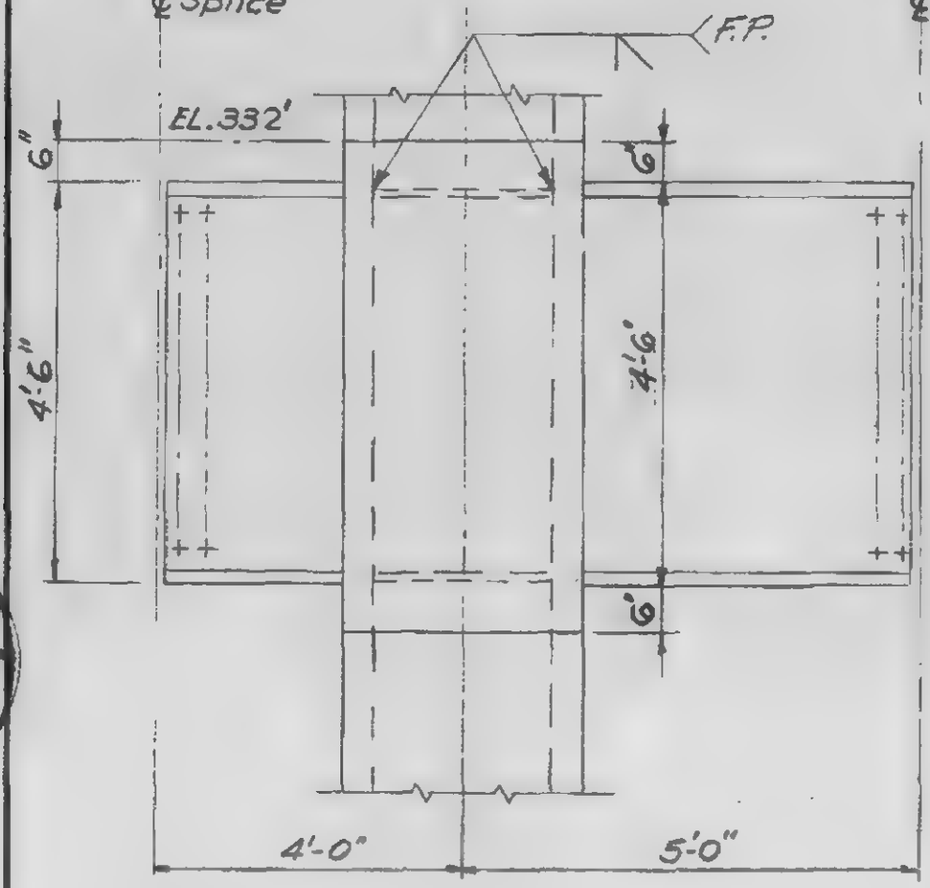

Weld 5 see sch. 1-B2-7&8

NOTE:
4 Splices shown in PL2. At contractors option, only 2 splices may be provided.

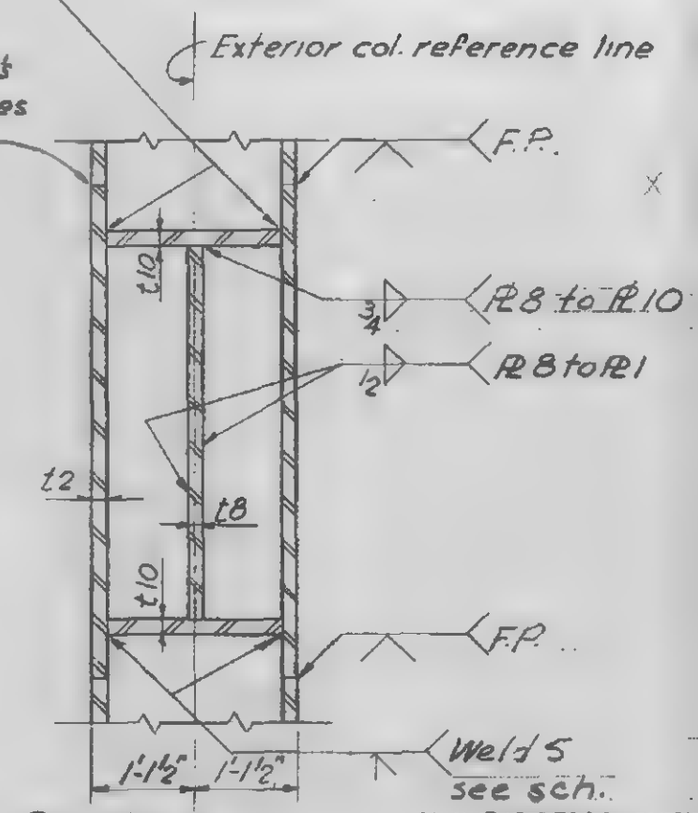

Section a-a

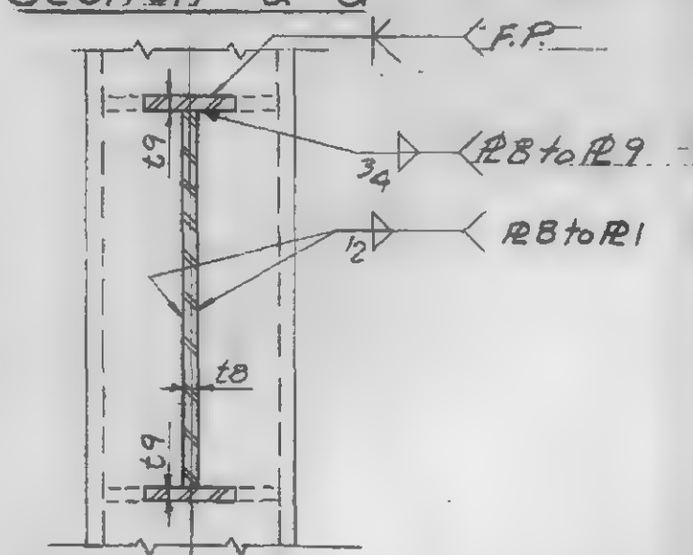

Section b-b

NOTE:
Column PL1 material shall be free of laminations within 2'-9" of the ℄ of the spandrel.

SPANDREL AT EL. 332' DETAILS

1-B2-33

LICENSED PROFESSIONAL ENGINEER — LESLIE E. ROBERTSON — No. 34360 — UNIVERSITY OF THE STATE OF NEW YORK

WORTHINGTON, SKILLING, HELLE & JACKSON — Civil & Structural Engineers

PROJECT THE WORLD TRADE CENTER | TITLE EXT. WALL TO EL. 363 COLUMN TYPE 7000 | DATE 3-31-67

REVISIONS

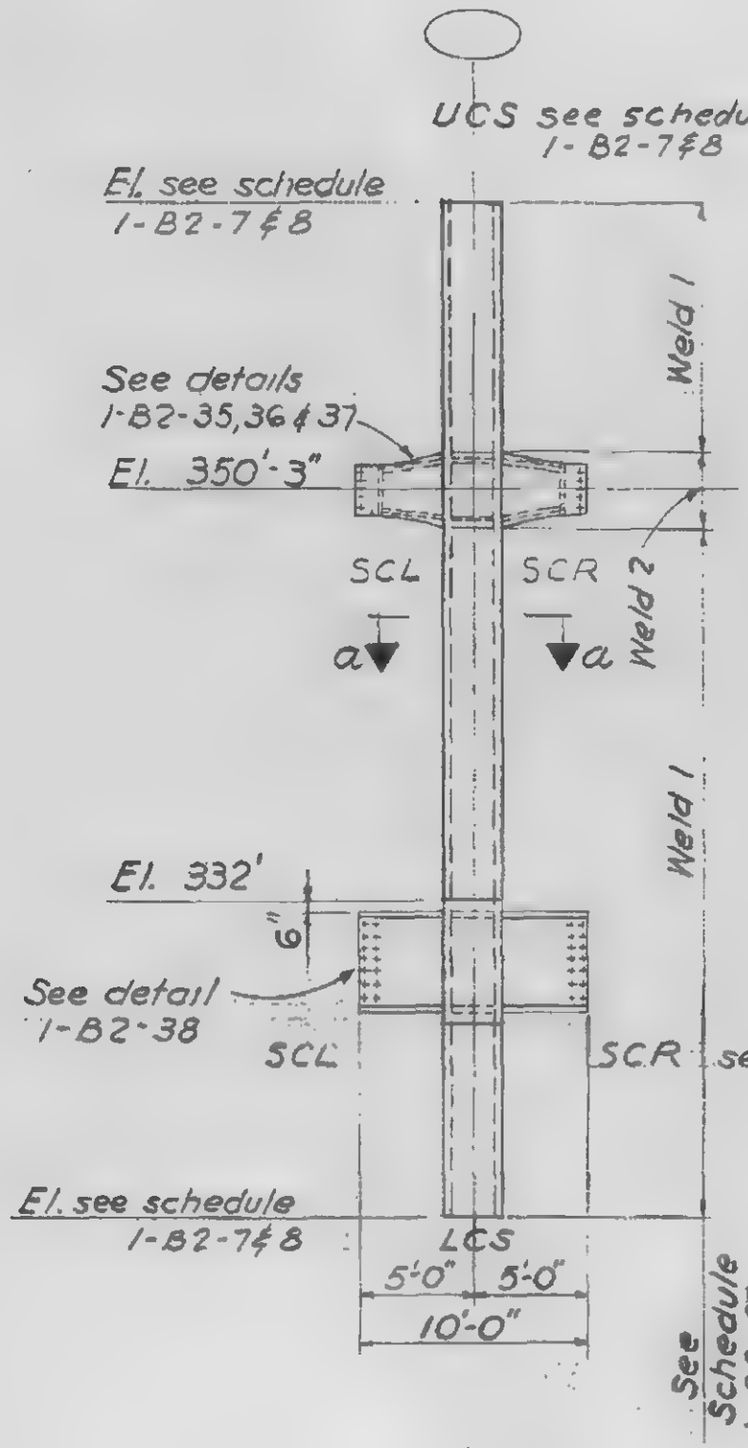

Elevation

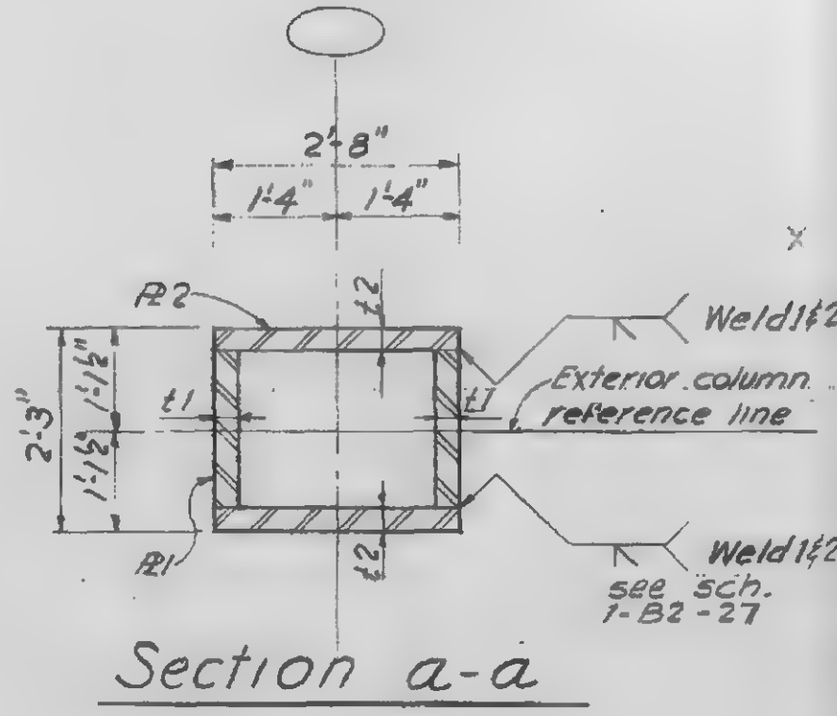

Section a-a

COLUMN TYPES 7005 THRU 7419

1-B2-34

LICENSED PROFESSIONAL ENGINEER
LESLIE E. ROBERTSON
No. 34360
UNIVERSITY OF THE STATE OF NE. YK.

WORTHINGTON, SKILLING, HELLE & JACKSON — Civil & Structural Engineers

PROJECT: THE WORLD TRADE CENTER | TITLE: EXT. WALL TO EL. 363-COLUMN TYPE 7000 | DATE: 3-31-67

REVISIONS

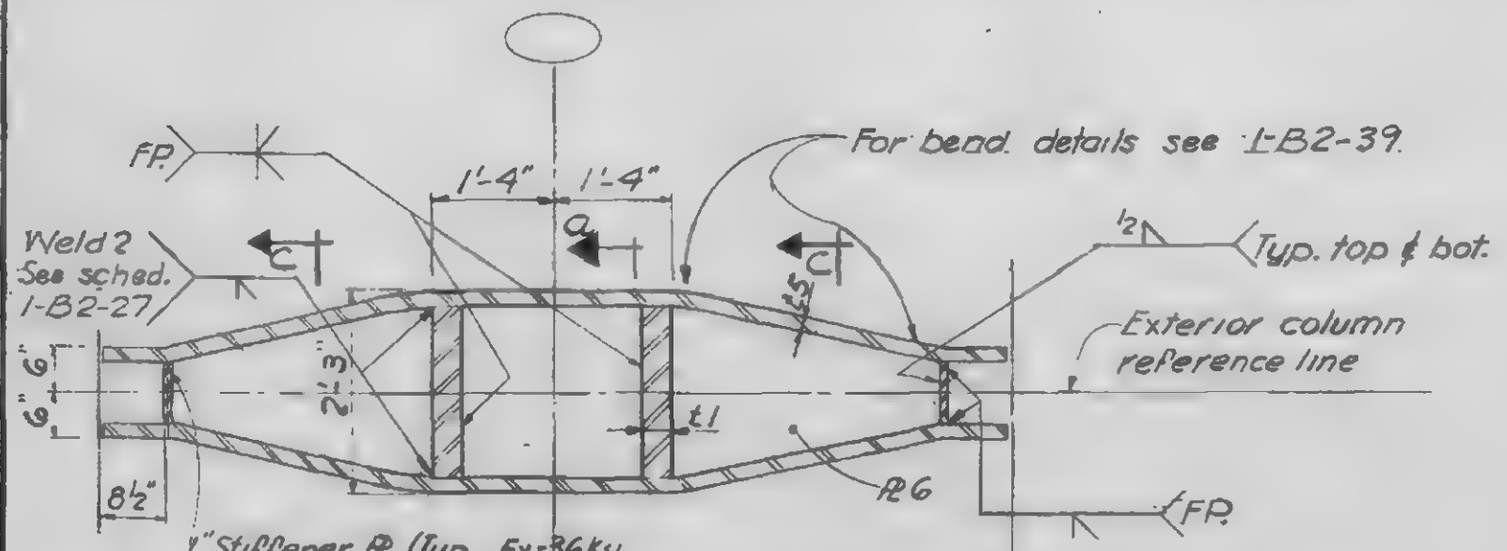

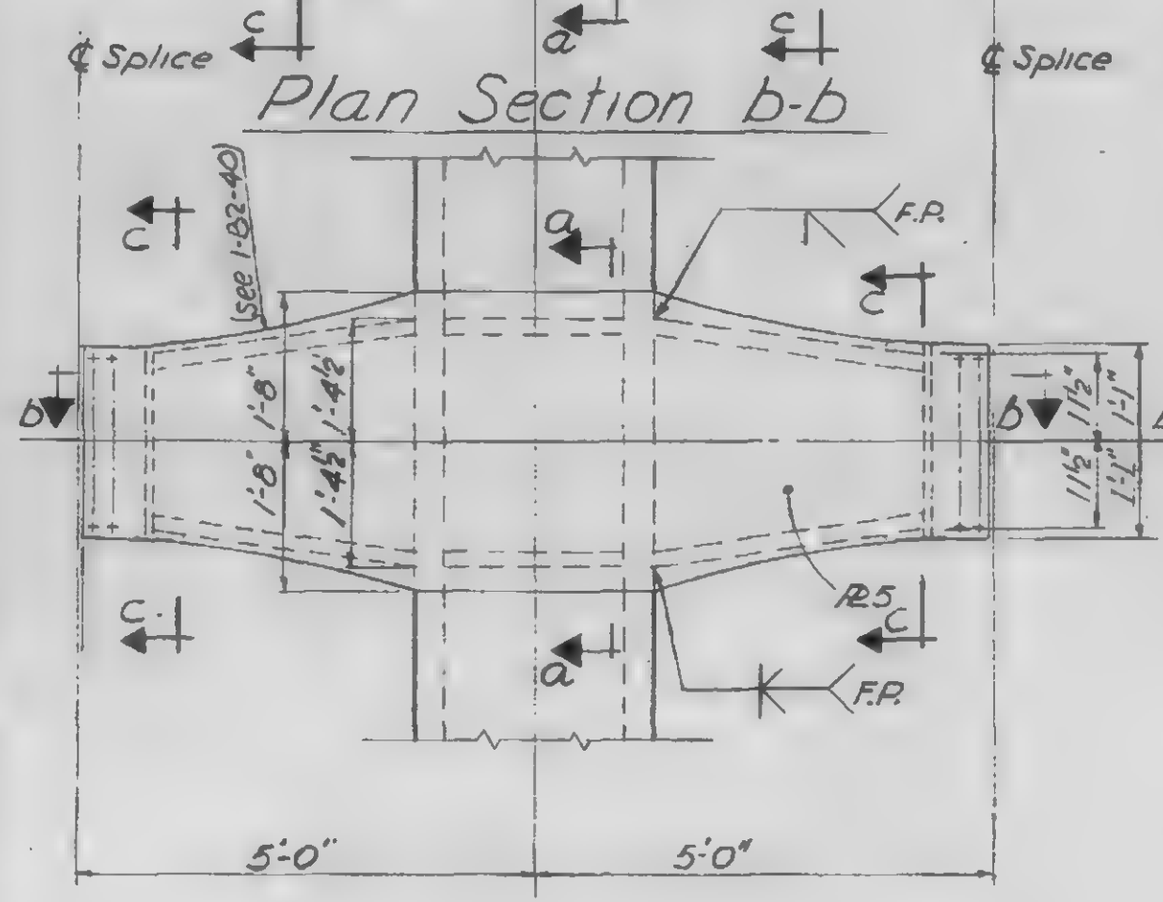

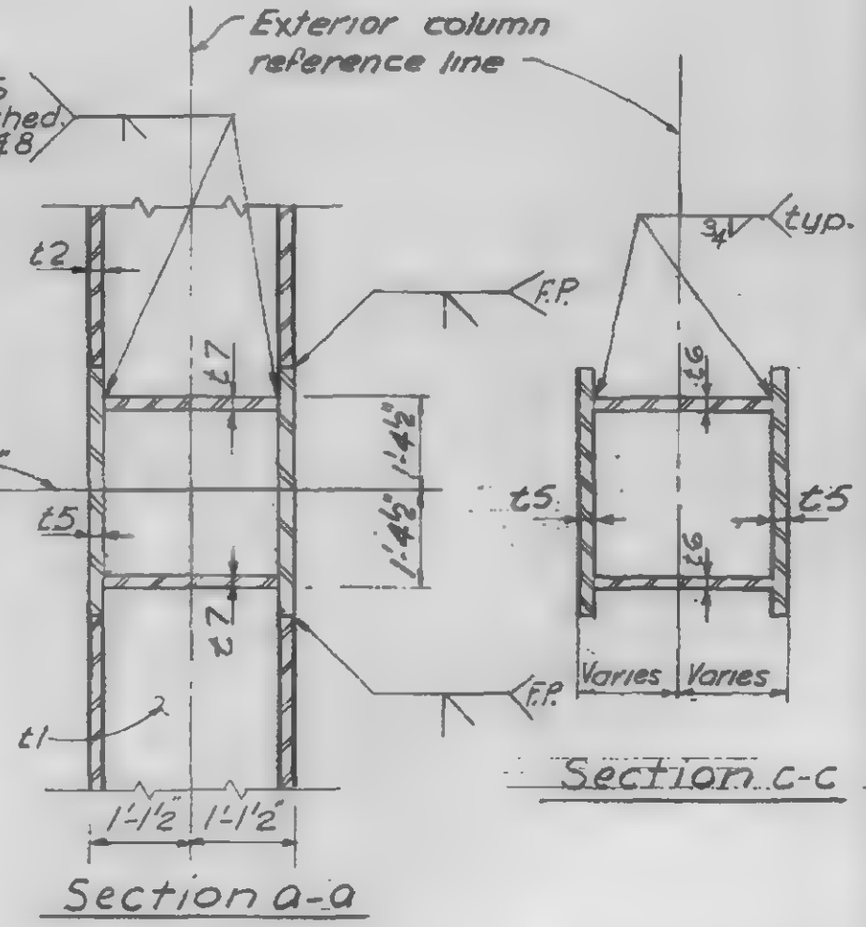

Note: Column PL1 material shall be free of laminations within 2'-2" of the ℄ of the spandrel.

SPANDREL AT EL. 350 DETAILS
COLUMN TYPE 7016, 7217, 7318, 7419

1-B2-35

LICENSED PROFESSIONAL ENGINEER
LESLIE E. ROBERTSON
No. 34360
UNIVERSITY OF THE STATE OF NEW YORK

WORTHINGTON, SKILLING, HELLE & JACKSON — Civil & Structural Engineers

PROJECT THE WORLD TRADE CENTER | TITLE EXT. WALL TO EL. 363-COLUMN TYPE 7000 | DATE 3-31-67

REVISIONS

6-18-68

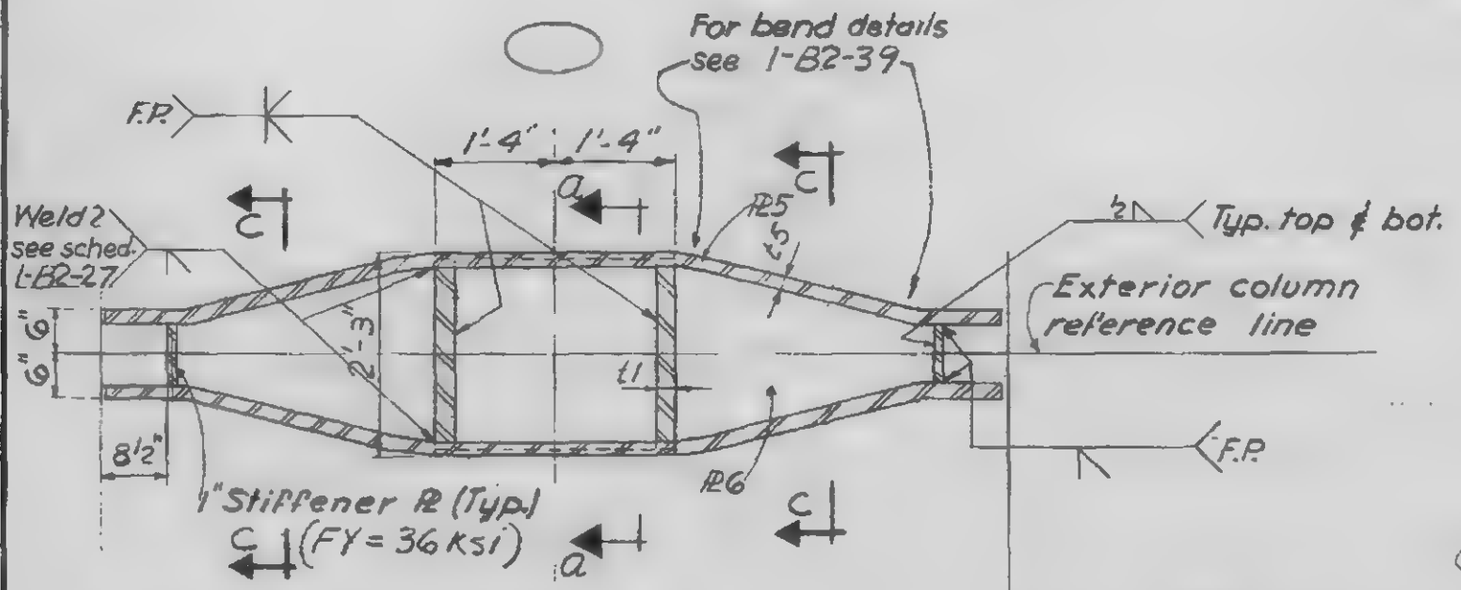

℄ Splice Plan Section b-b

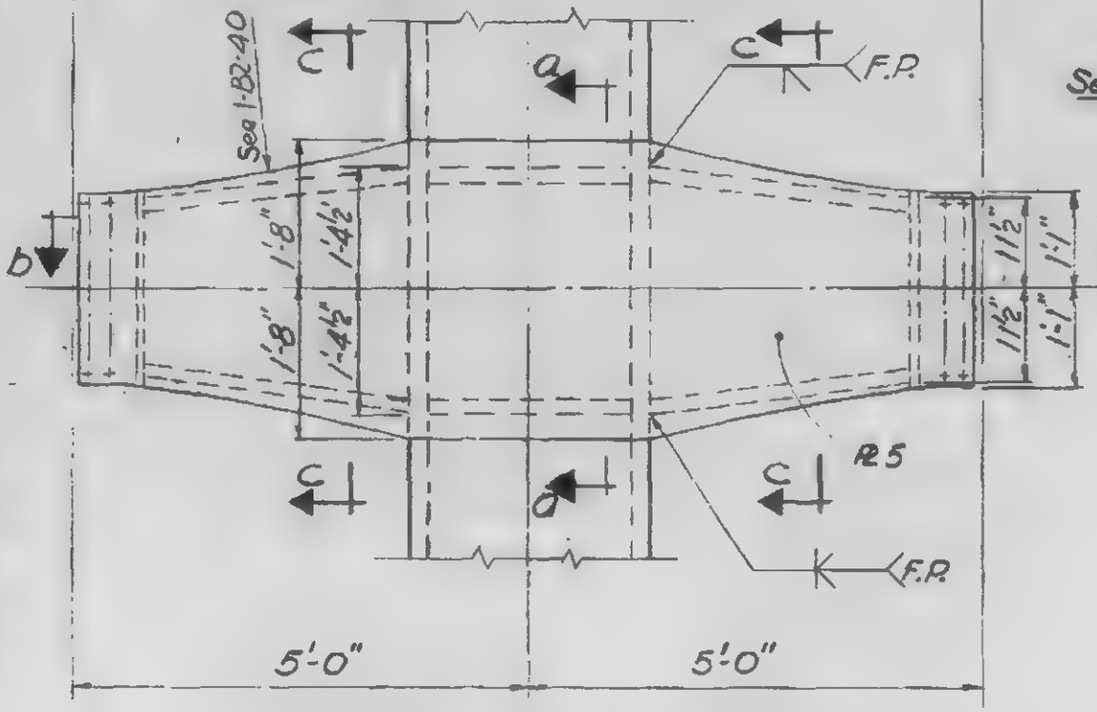

Note: Column PL 1 material shall be free of laminations within 2'-2" of the ℄ of the spandrel.

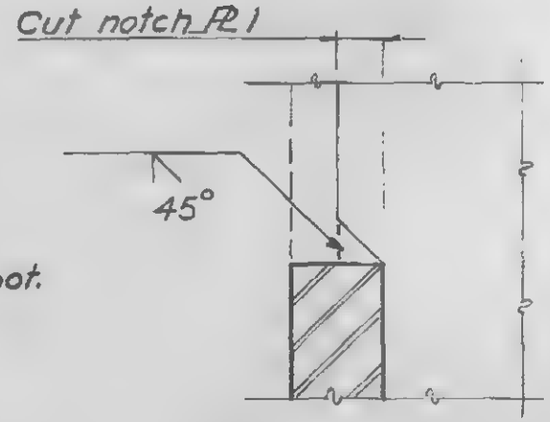

Detail 1

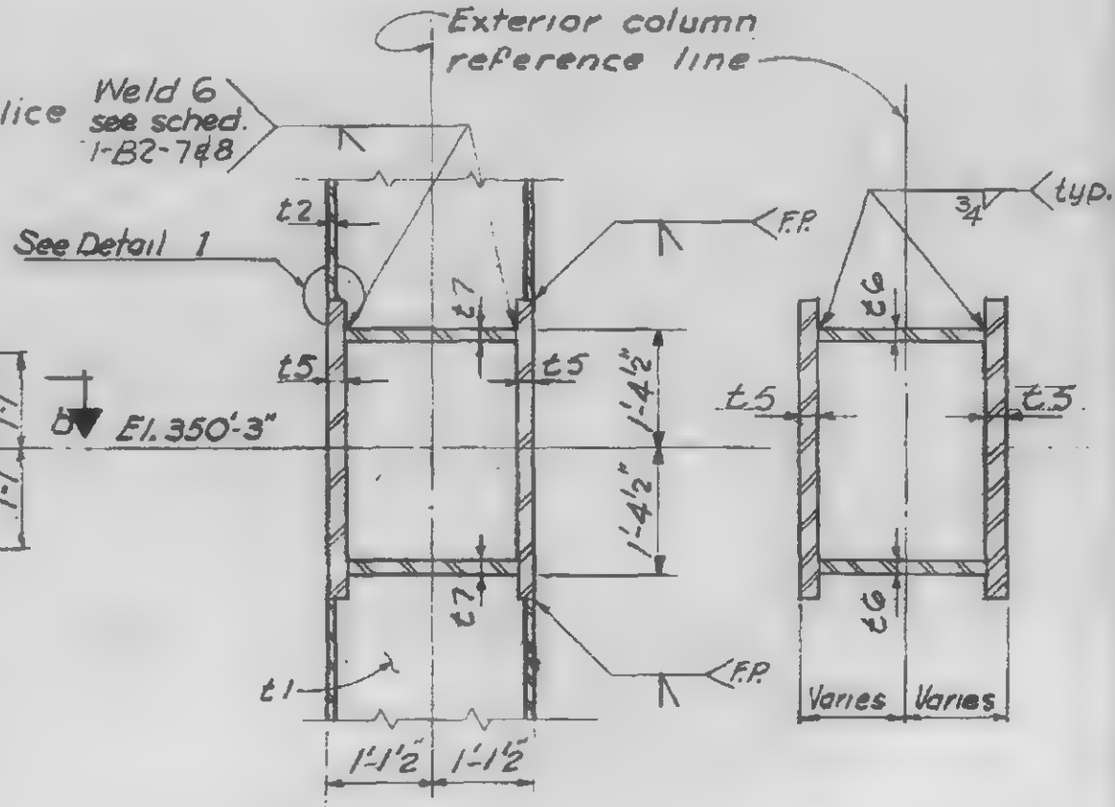

Section a-a

Section c-c

SPANDREL AT EL. 350' DETAILS
COLUMN TYPE 7005 THRU 7013 INCL.
AND 7025 THRU 7028 INCL.

1-B2-36

LICENSED PROFESSIONAL ENGINEER
LESLIE E. ROBERTSON
No. 34360
UNIVERSITY OF THE STATE OF NEW YORK

WORTHINGTON, SKILLING, HELLE & JACKSON — Civil & Structural Engineers

PROJECT: THE WORLD TRADE CENTER | TITLE: EXTERIOR WALL TO EL. 363'- COLUMN TYPE 7000 | DATE: 3-31-67

REVISIONS

4-24-67
2-15-68

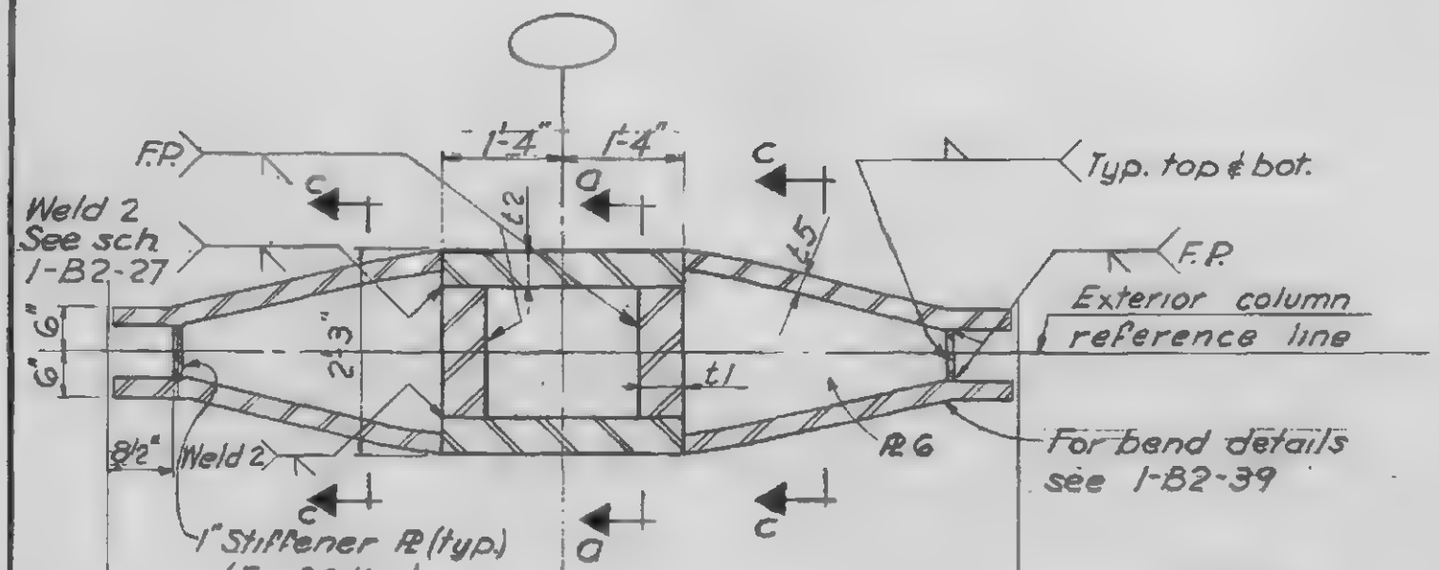

Plan Section b-b

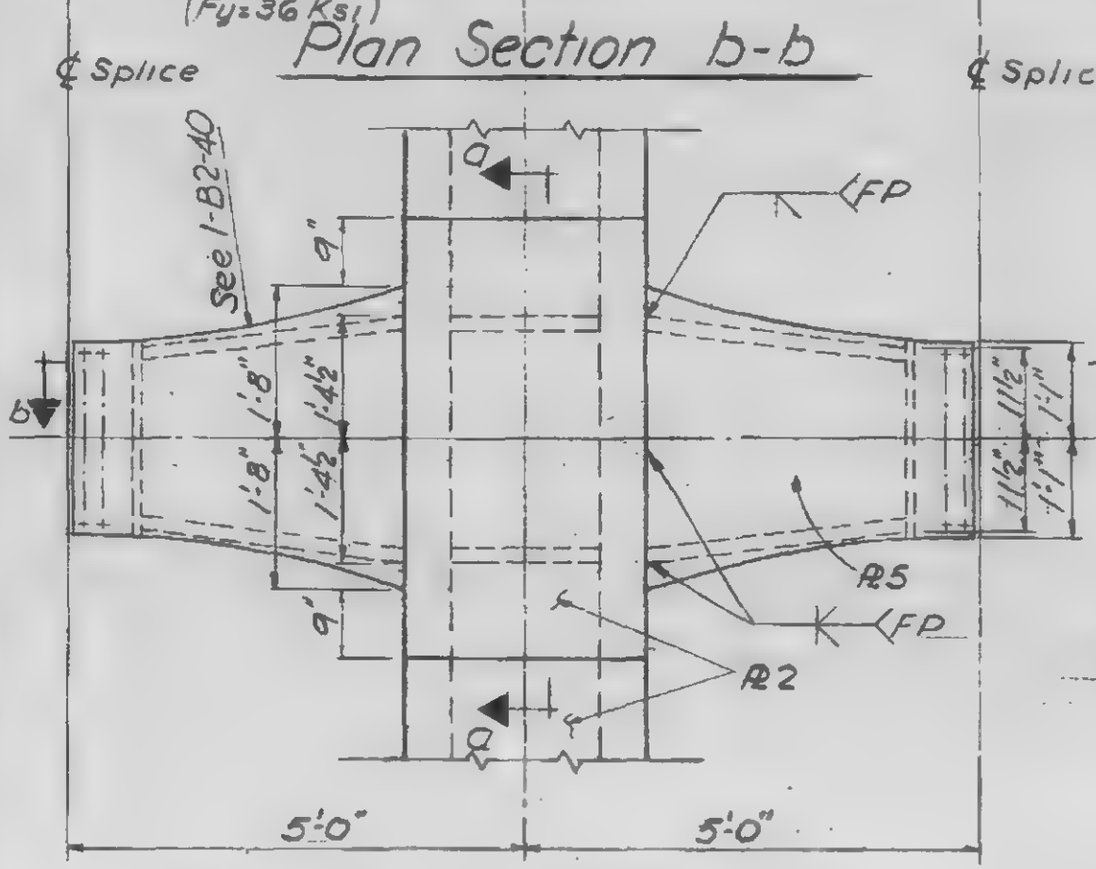

Note: Column PL 1 material shall be free of laminations within 2'-2" of the ℄ of the spandrel

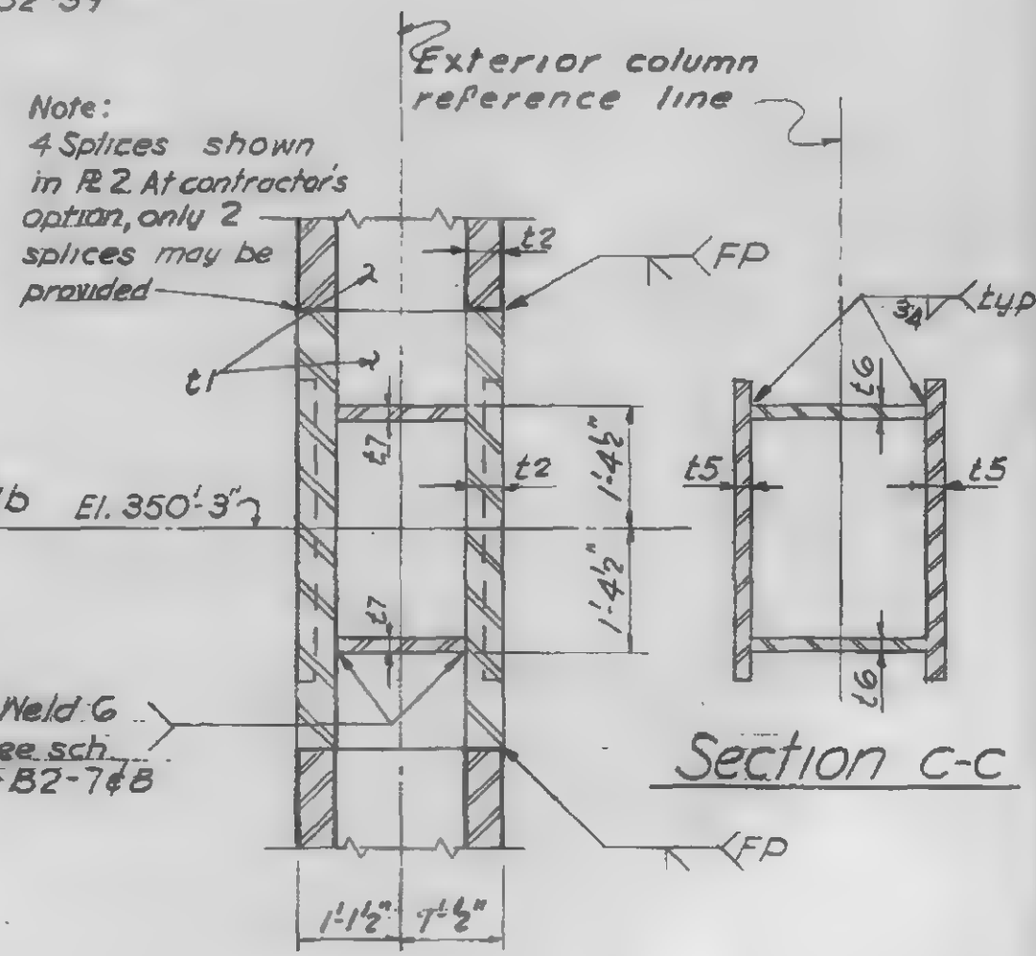

Section a-a

Section c-c

COLUMN TYPES (7020) & 7021

1-B2-37

LICENSED PROFESSIONAL ENGINEER
LESLIE E. ROBERTSON
No. 34360
UNIVERSITY OF THE STATE OF NEW YORK

WORTHINGTON, SKILLING, HELLE & JACKSON — Civil & Structural Engineers

PROJECT THE WORLD TRADE CENTER | TITLE EXT. WALL TO EL. 363 - COLUMN TYPE 7000 | DATE 3-31-67

REVISIONS

4-24-67

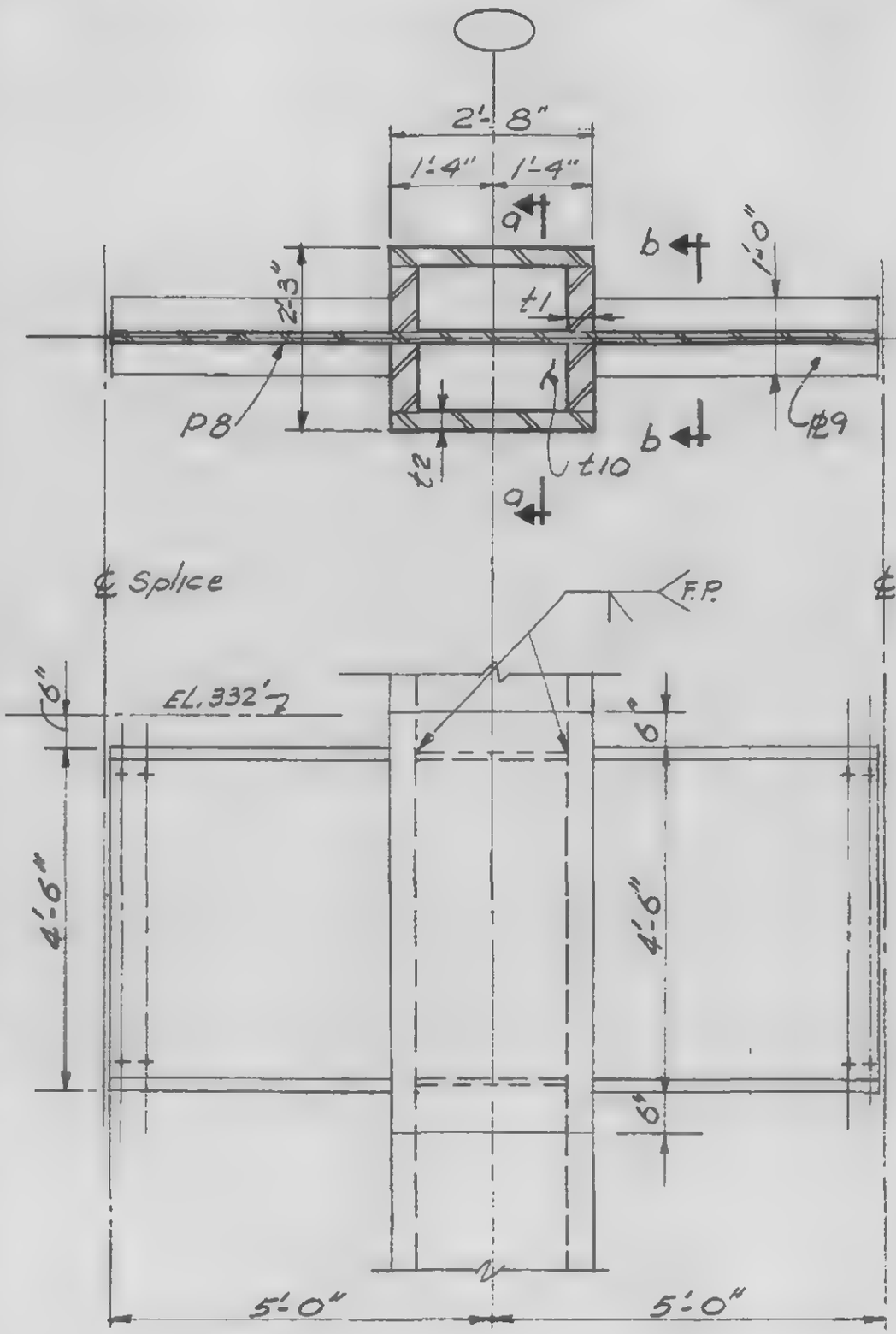

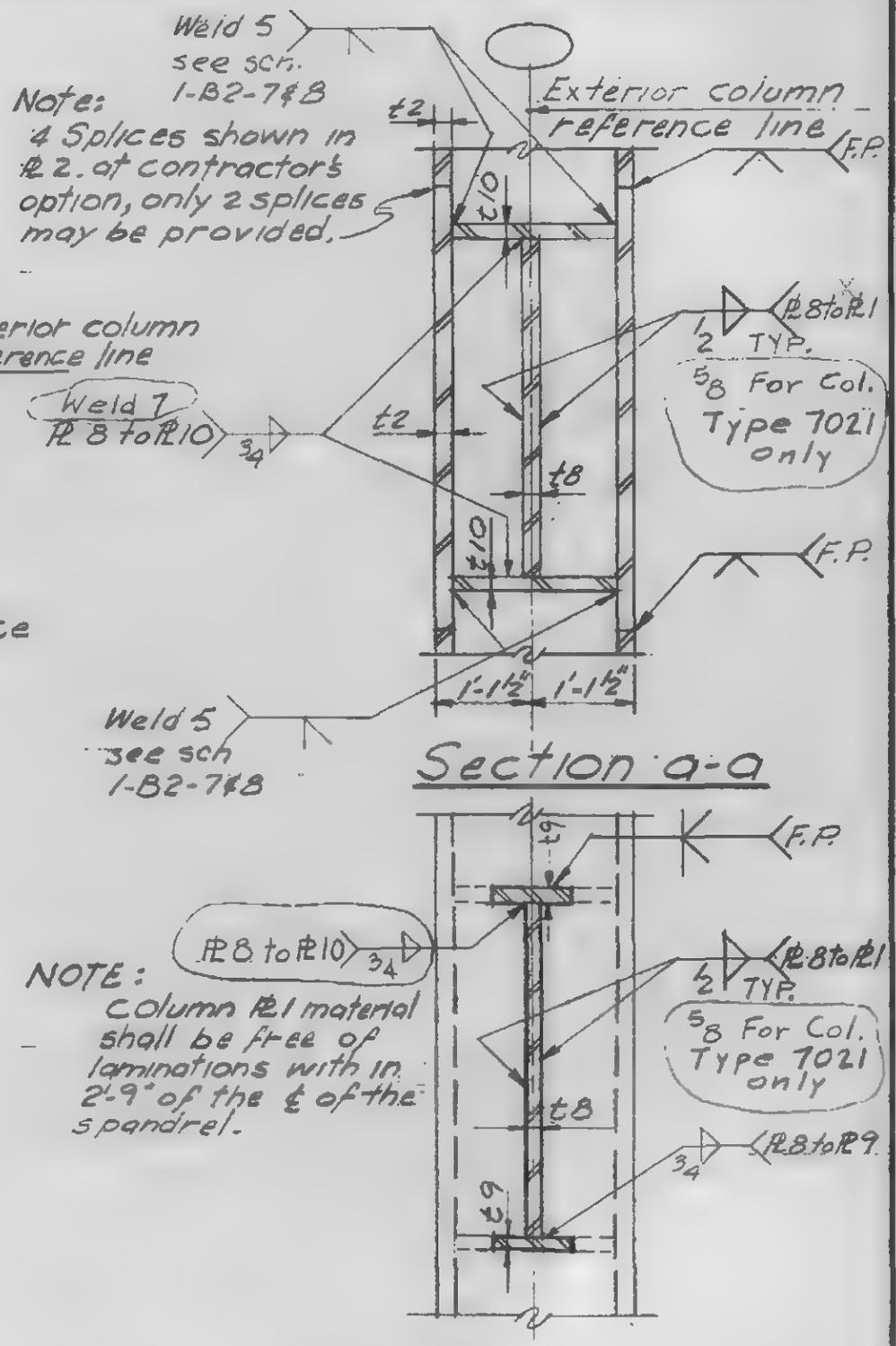

Section a-a

NOTE: Column ℄ 1 material shall be free of laminations with in 2'-9" of the ℄ of the spandrel.

Section b-b

SPANDREL AT EL. 332 DETAILS

1-B2-38

LICENSED PROFESSIONAL ENGINEER
LESLIE E. ROBERTSON
No. 34360
UNIVERSITY OF THE STATE OF NEW YORK

WORTHINGTON, SKILLING, HELLE & JACKSON Civil & Structural Engineers

PROJECT THE WORLD TRADE CENTER | TITLE EXTERIOR WALL TO EL. 363'-SPAND. EL. 350: BENDING DET. | DATE 3-31-67

REVISIONS

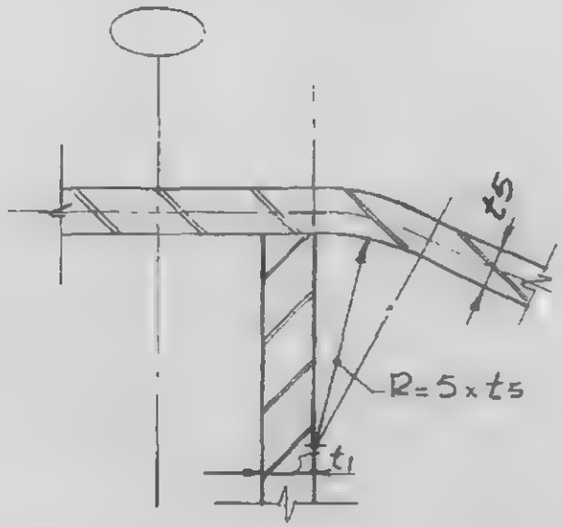

DETAIL AT TYPICAL COLUMN

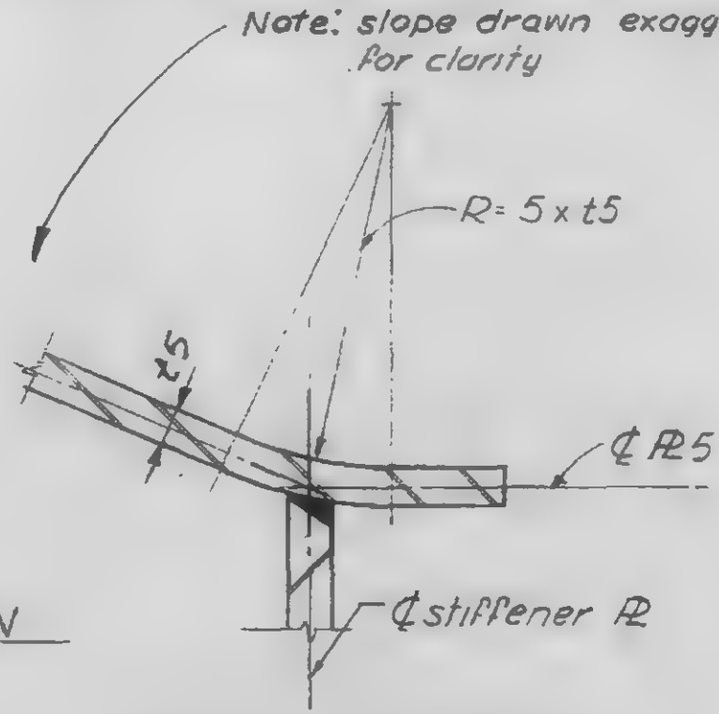

DETAIL AT TYPICAL SPANDREL SPLICE

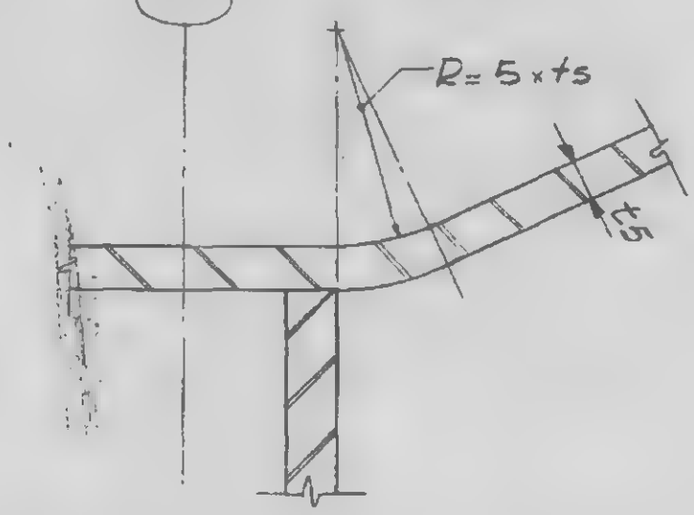

DETAIL AT COLUMNS 101, 159, 201, 259, 301, 359, 401, & 459.

LICENSED PROFESSIONAL ENGINEER
LESLIE E. ROBERTSON
No. 34360
UNIVERSITY OF THE STATE OF NE, YORK

1-B2-39

WORTHINGTON, SKILLING, HELLE & JACKSON Civil & Structural Engineers

PROJECT THE WORLD TRADE CENTER | TITLE EXT. WALL TO EL. 363 - SPANDREL 350 - DETAIL # 5. | DATE 3-31-67

REVISIONS

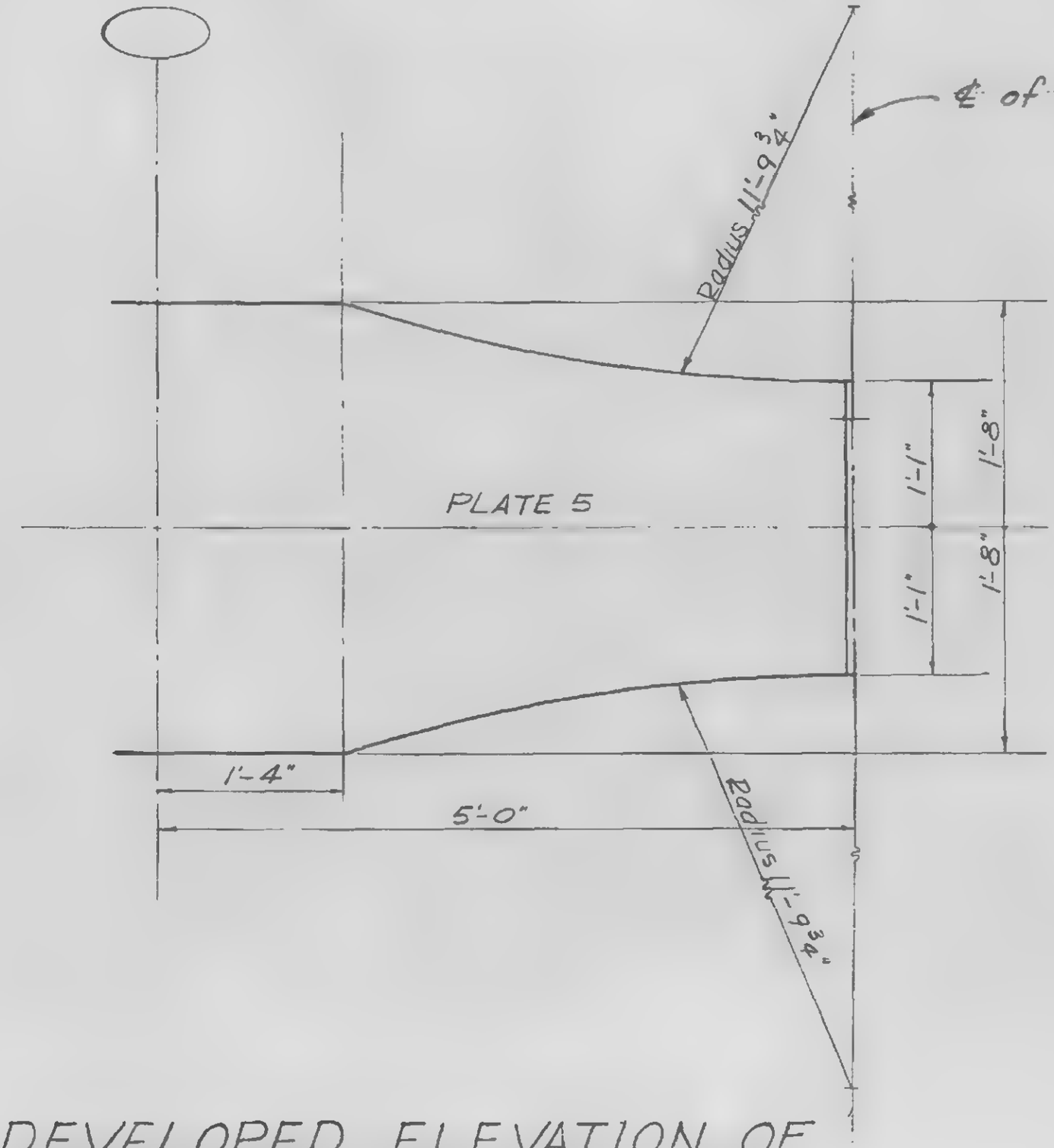

DEVELOPED ELEVATION OF PLATE 5

LICENSED PROFESSIONAL ENGINEER
LESLIE E. ROBERTSON
No. 34360
UNIVERSITY OF THE STATE OF NEW YORK

1-B2-40

WORTHINGTON, SKILLING, HELLE & JACKSON Civil & Structural Engineers

PROJECT THE WORLD TRADE CENTER | TITLE EXT. WALL TO EL. 363 - COL. SPLICE DET. 101 | DATE 3-31-67

REVISIONS

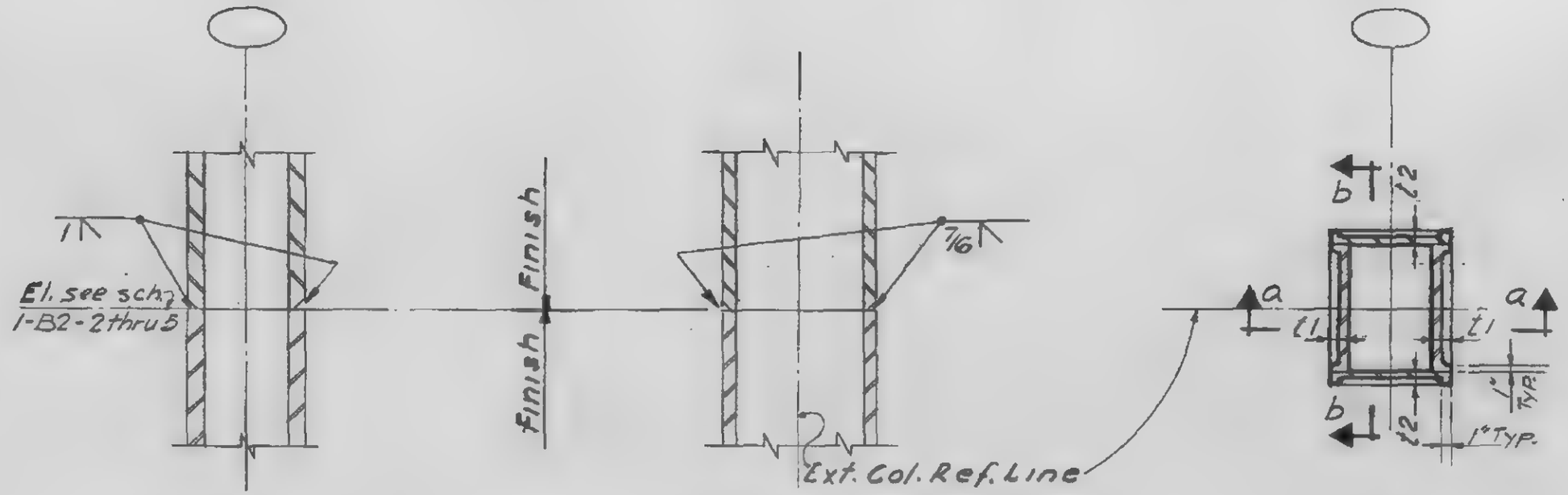

Section a-a | Section b-b | PLAN weld - preparation

LICENSED PROFESSIONAL ENGINEER LESLIE E. ROBERTSON No. 34360 UNIVERSITY OF THE STATE OF NEW YORK

I-B2-41

WORTHINGTON, SKILLING, HELLE & JACKSON — Civil & Structural Engineers

PROJECT THE WORLD TRADE CENTER | TITLE EXT. WALL TO EL. 363 - COL. SPLICE DETS. 200 | DATE 3-31-67

REVISIONS

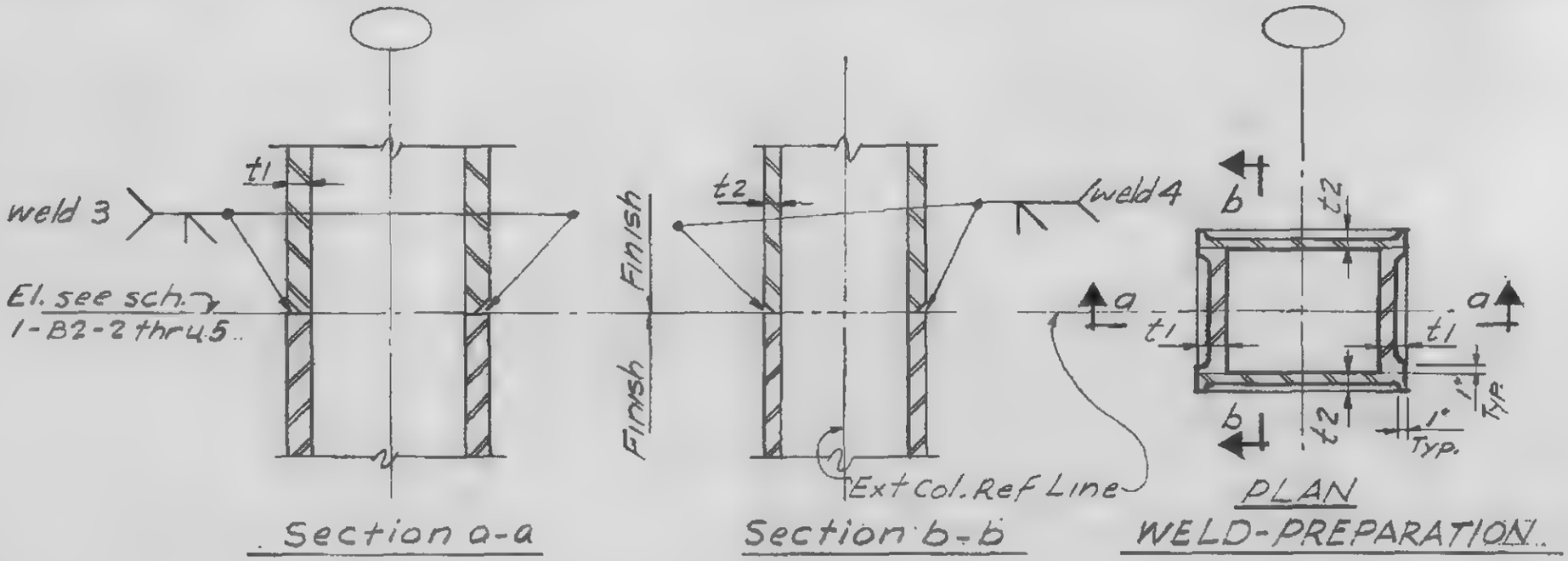

Section a-a

Section b-b

PLAN
WELD-PREPARATION

Splice detail	Weld #3	Weld #4
201	1 1/8	3/4
202	1 1/4	3/4
203	1 3/8	3/4
204	1 3/8	1
205	1 1/2	1
206	1 5/8	1 1/8
207	1 5/8	1 1/4
208	1 3/4	1 1/4
209	2	1 1/2

LICENSED PROFESSIONAL ENGINEER
LESLIE E. ROBERTSON
No. 34360
UNIVERSITY OF THE STATE OF NEW YORK

1-B2-42

WORTHINGTON, SKILLING, HELLE & JACKSON — Civil & Structural Engineers

PROJECT: THE WORLD TRADE CENTER | TITLE: EXTERIOR WALL TO EL. 363' - COL. SPLICE DETAIL 300 | DATE: 3-31-67

REVISIONS

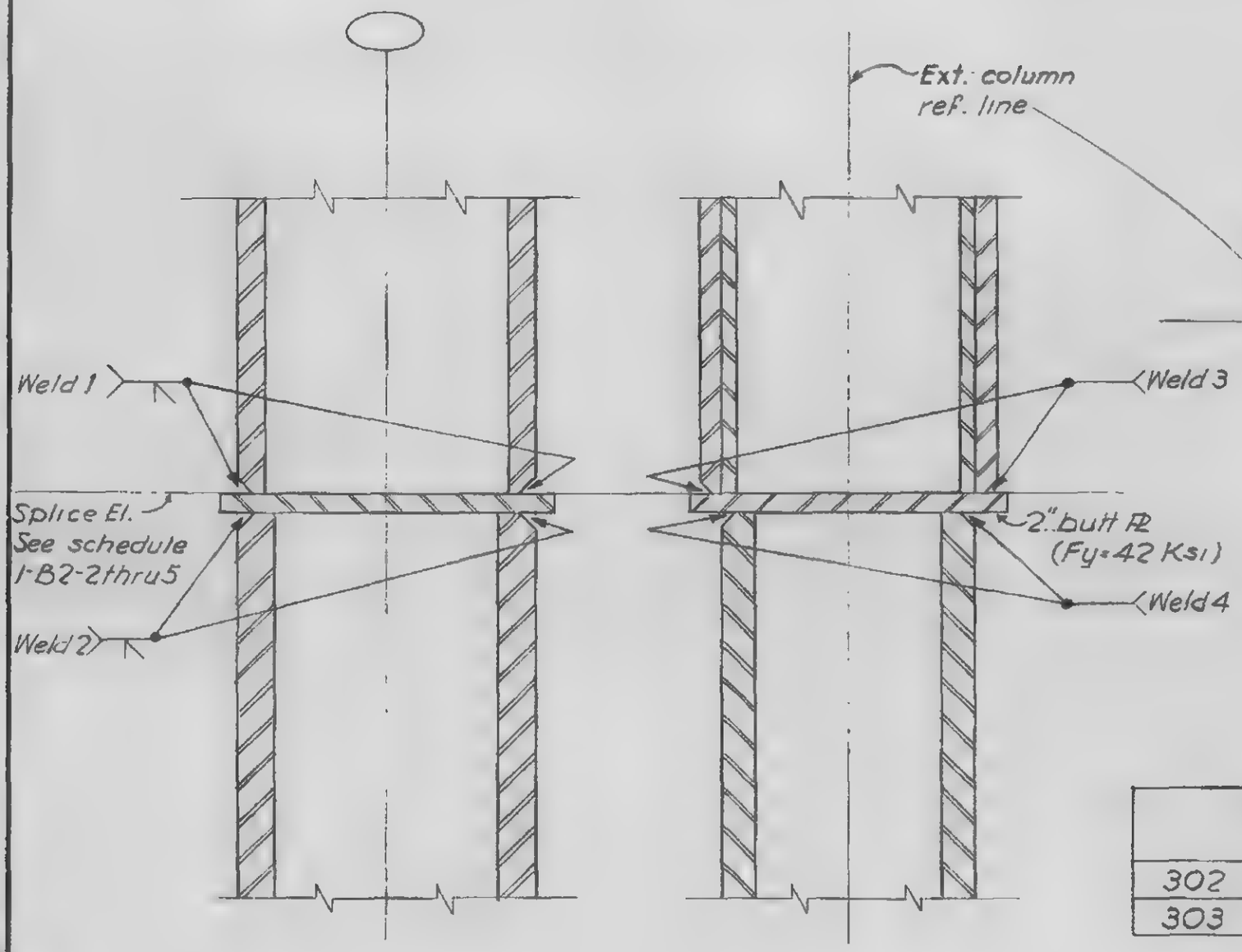

Section a-a

Section b-b

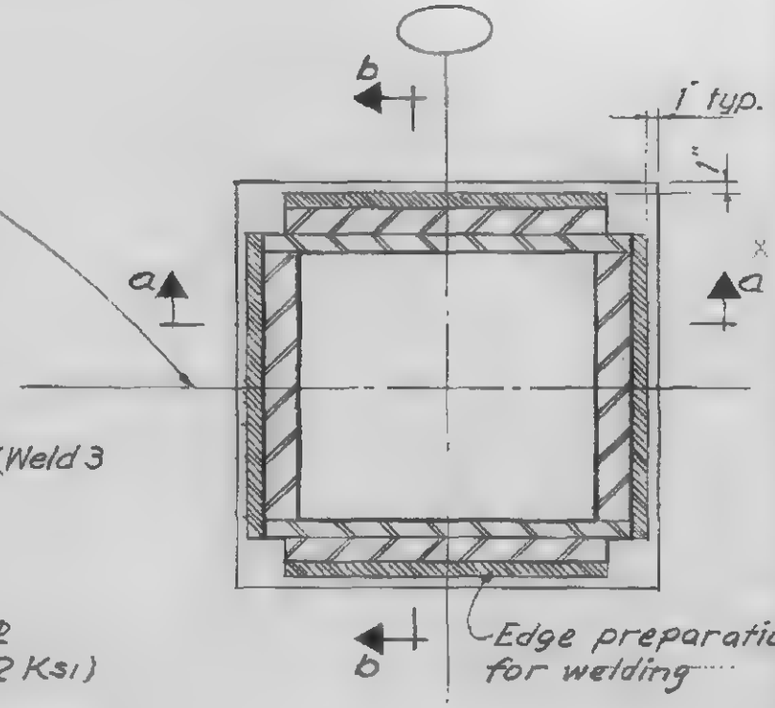

PLAN

	Weld 1	Weld 2	Weld 3	Weld 4
302	1/2	1 5/8	1 3/8	1 3/8
303	1/4	1 5/8	1 3/8	1/8

LICENSED PROFESSIONAL ENGINEER — LESLIE E. ROBERTSON — No. 34360 — UNIVERSITY OF THE STATE OF NEW YORK

1-B2-43

WORTHINGTON, SKILLING, HELLE & JACKSON — Civil & Structural Engineers

PROJECT: THE WORLD TRADE CENTER | TITLE: EXTERIOR WALL TO EL.363 - COL.SPLICE DETAIL 401 | DATE: 3-31-67

REVISIONS

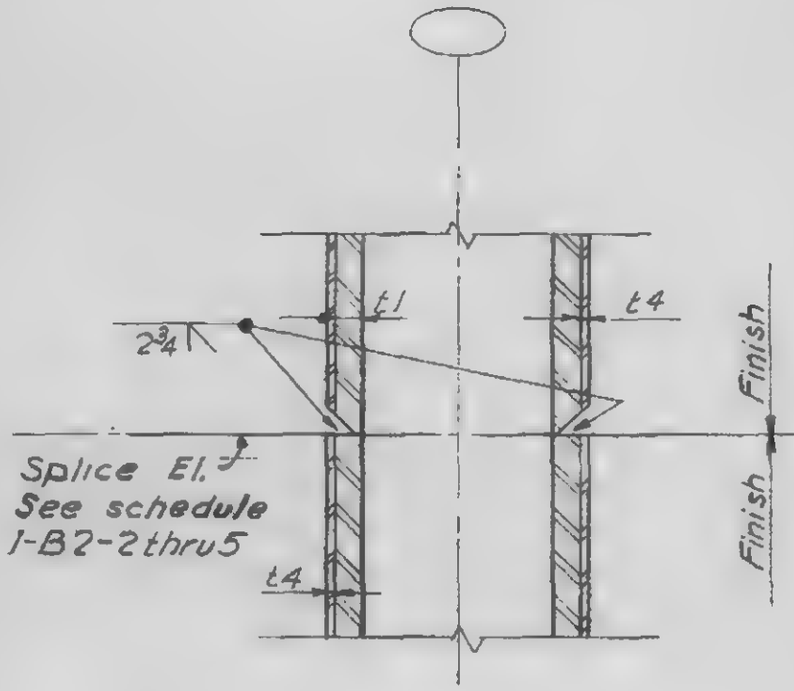

Section a-a

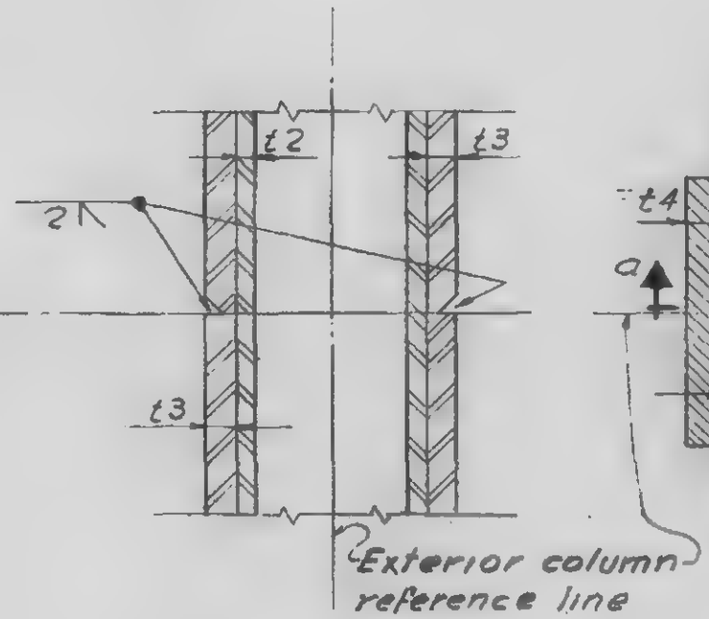

Section b-b

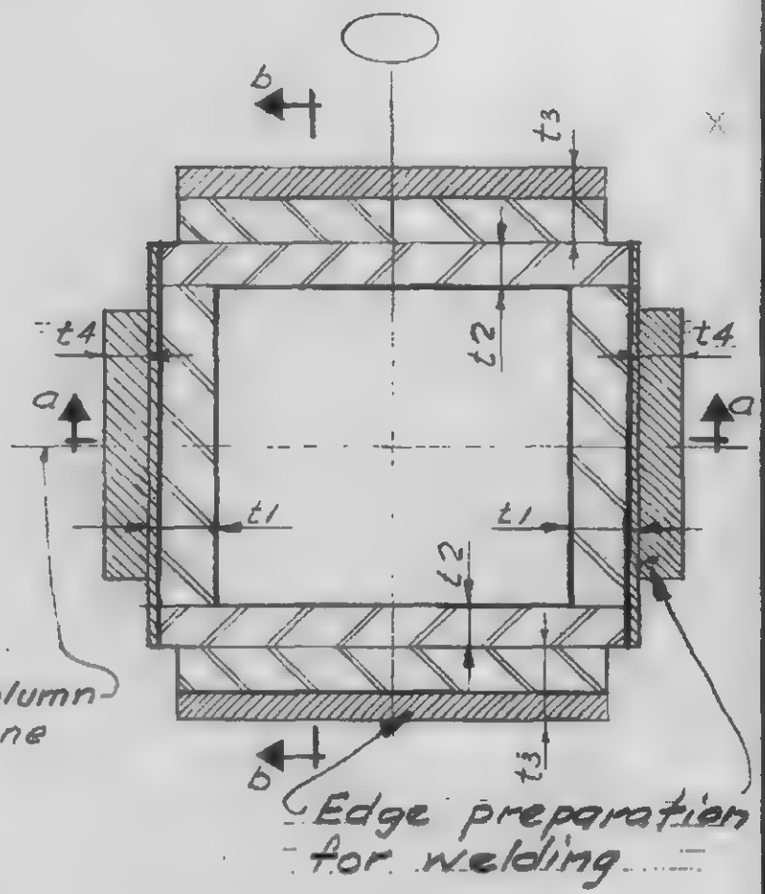

PLAN

LICENSED PROFESSIONAL ENGINEER
LESLIE E. ROBERTSON
No. 34360
UNIVERSITY OF THE STATE OF NEW YORK

1-B2-44

WORTHINGTON, SKILLING, HELLE & JACKSON — Civil & Structural Engineers

PROJECT: THE WORLD TRADE CENTER | TITLE: EXT. WALL TO EL. 363 - COL. SPLICE DET. 501 | DATE: 3-31-67

REVISIONS

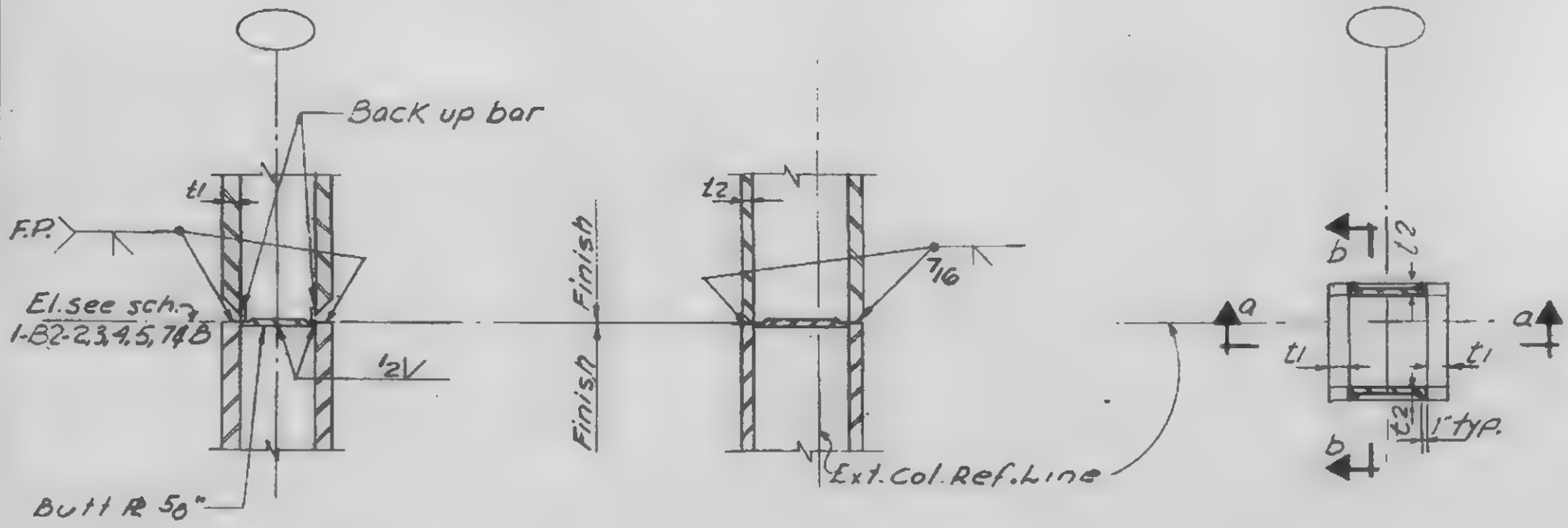

Section a-a

Section b-b

PLAN
Weld-preparation

LICENSED PROFESSIONAL ENGINEER
LESLIE E. ROBERTSON
No. 34360
UNIVERSITY OF THE STATE OF NEW YORK

1-B2-45

WORTHINGTON, SKILLING, HELLE & JACKSON — Civil & Structural Engineers

PROJECT THE WORLD TRADE CENTER | TITLE EXT. WALL TO EL. 363 - COL. SPLICE DETS. 700 | DATE 3-31-67

REVISIONS

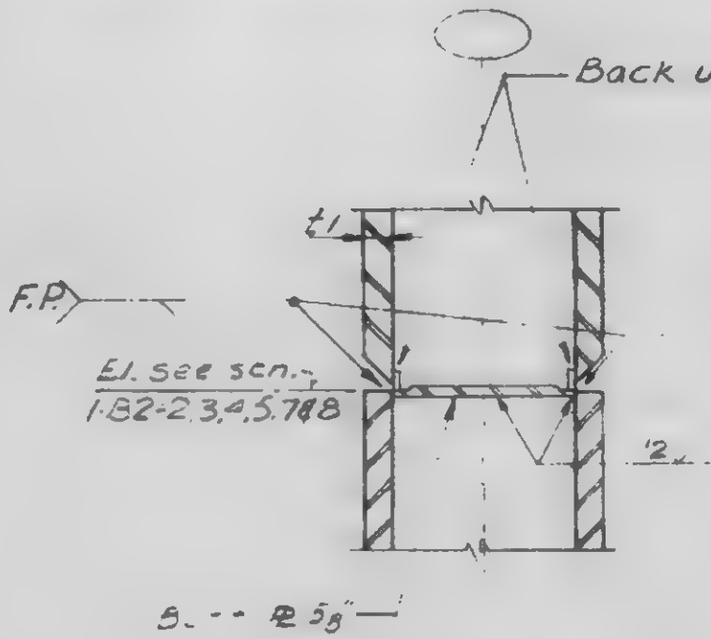

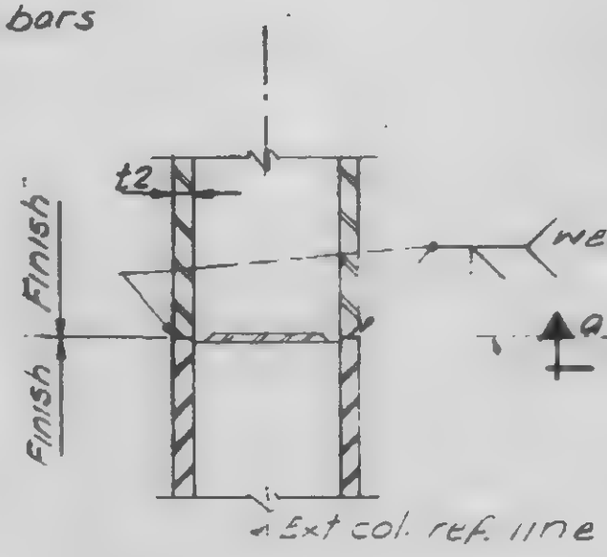

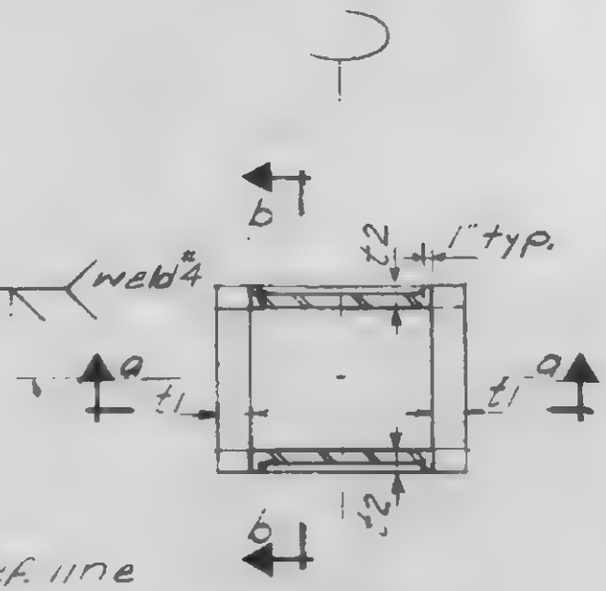

Splice detail	Weld #4
701	3/4
702	1
703	1 1/8
704	1 1/4
705	1 1/2

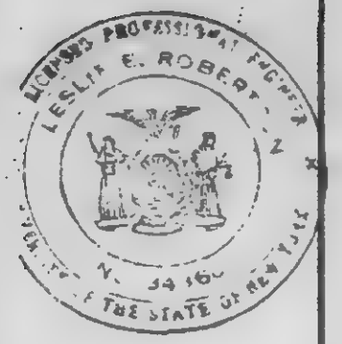

1-B2-46

WORTHINGTON, SKILLING, HELLE & JACKSON — Civil & Structural Engineers

PROJECT: THE WORLD TRADE CENTER | TITLE: EXT. WALL TO EL. 363'- SPANDREL SPLICE DETAIL A | DATE: 3-31-67

REVISIONS
4-24-67
1-26-68

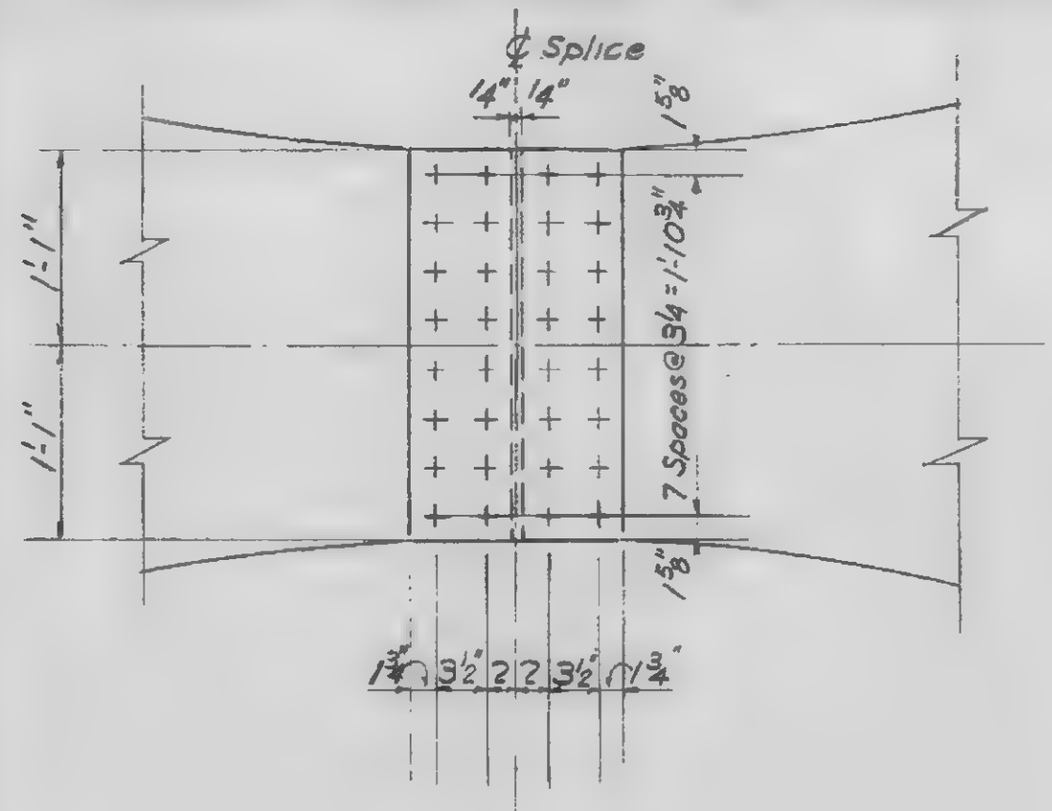

Splice Detail	Bolts
A11	32-1¼" A490
A12	32-1⅛" A490
A13	32-1" A490

Note
Bolt holes in spandrel plates to be 3/16" larger in diameter than the schedule bolt. Holes in splice plates 1/16" larger than the schedule bolt.

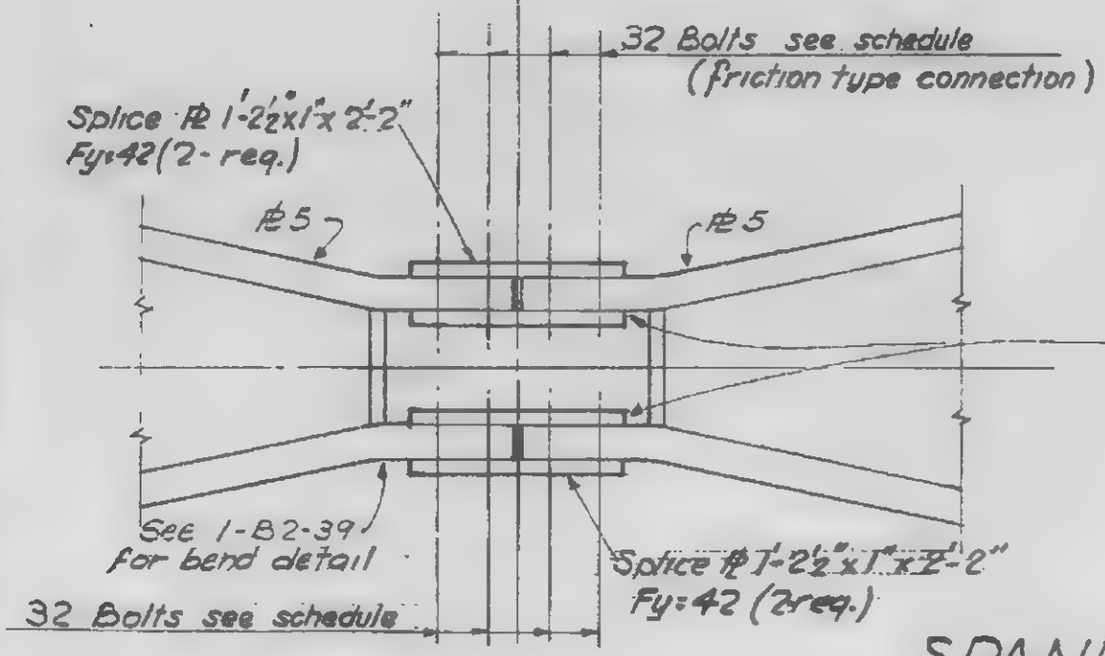

Note:
Use filler plates where thickness of PL 5 differs in adjacent spadrels

LICENSED PROFESSIONAL ENGINEER
LESLIE E. ROBERTSON
No. 34360
UNIVERSITY OF THE STATE OF NEW YORK

SPANDREL SPLICE DETAILS A11, A12 & A13

1-B2-47

WORTHINGTON, SKILLING, HELLE & JACKSON — Civil & Structural Engineers

PROJECT: THE WORLD TRADE CENTER | TITLE: EXT. WALL TO EL. 363 - SPANDREL SPLICE DETAIL A | DATE: 3-31-67

REVISIONS
1-26-68
7-17-68

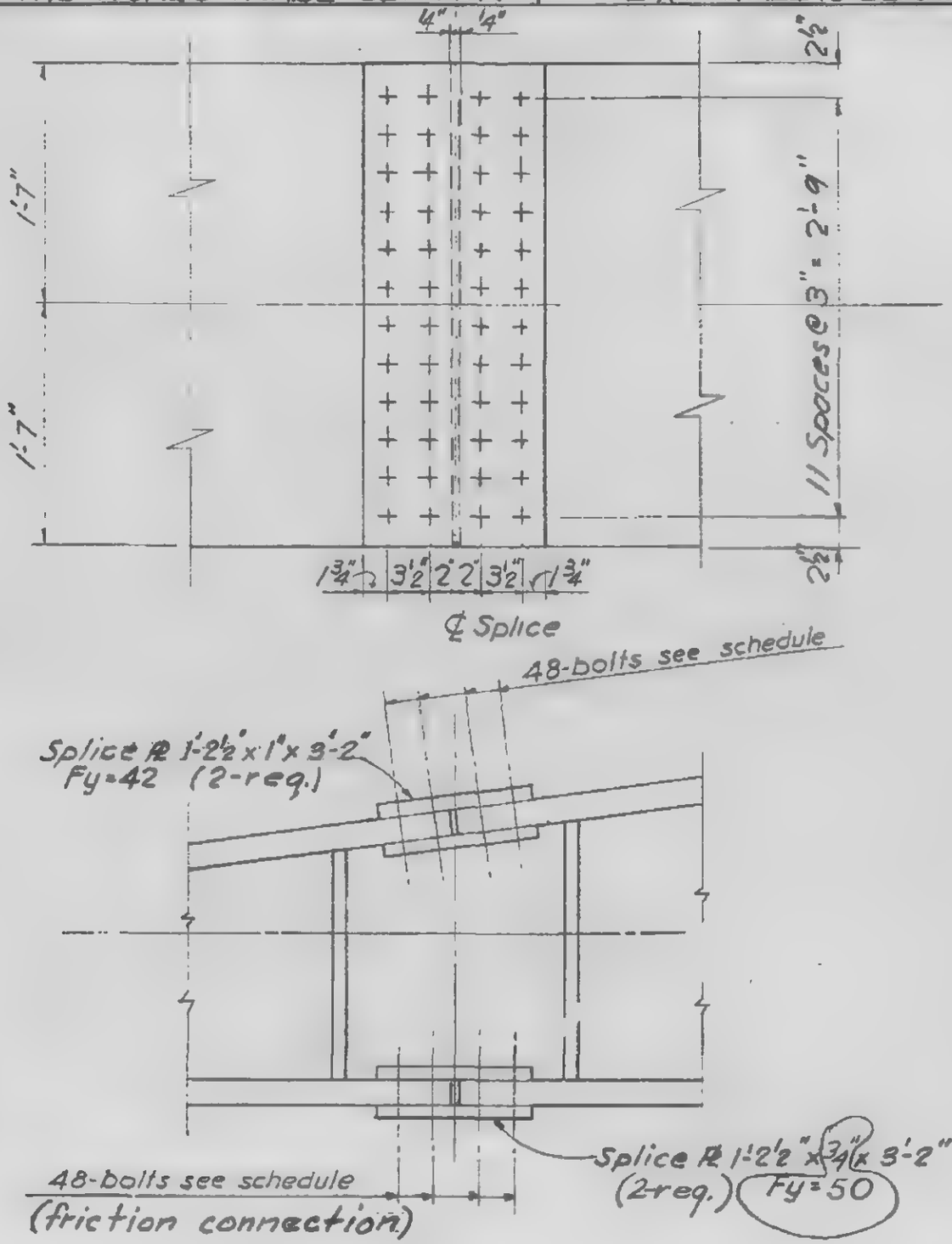

Splice Detail	Bolts
A14	48 - 1⅛" A490
A15	48 - 1¼" A490

Note
Bolt holes in spondrel plates to be 3/16" larger in diameter than the schedule bolt. Holes in splice plates 1/16" larger than the schedule bolt.

LICENSED PROFESSIONAL ENGINEER
LESLIE E. ROBERTSON
No. 34360
UNIVERSITY OF THE STATE OF NEW YORK

SPANDREL SPLICE DETAIL A14 & A15

1-B2-48

WORTHINGTON, SKILLING, HELLE & JACKSON — Civil & Structural Engineers

PROJECT THE WORLD TRADE CENTER | TITLE EXT. WALL TO EL. 363'-SPANDREL DETAIL A | DATE 3-31-67

REVISIONS

4-24-67

1-26-68

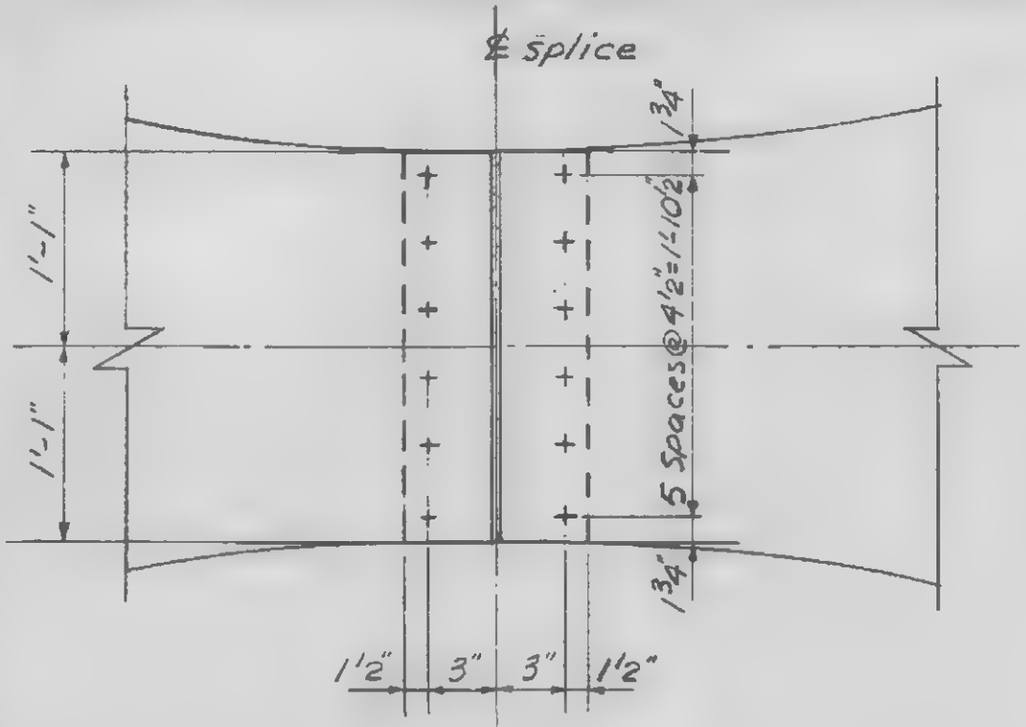

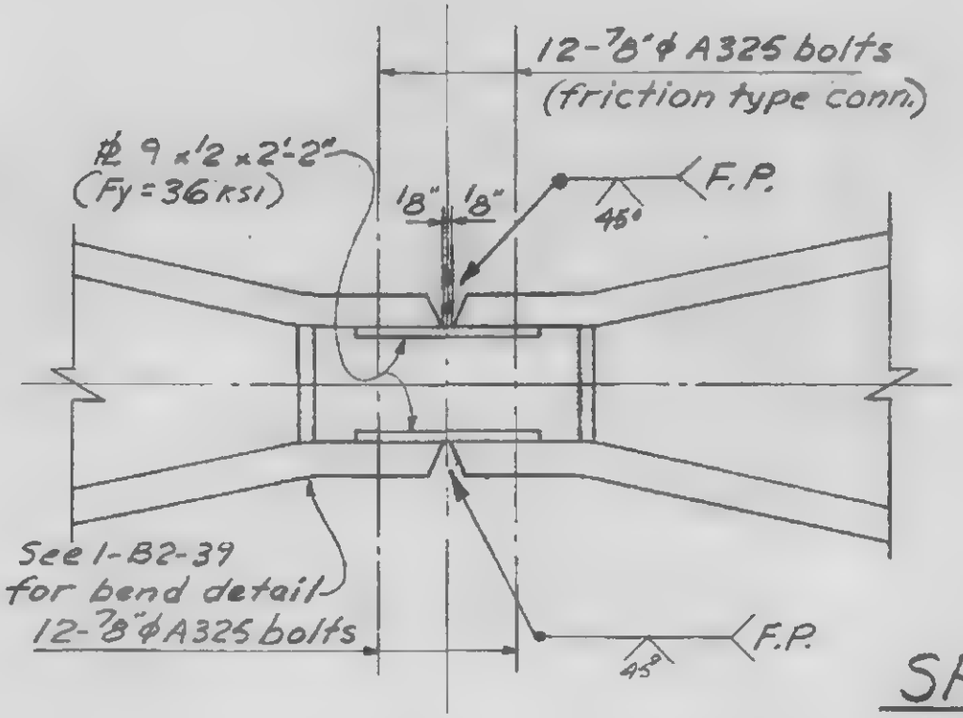

Note
Bolt holes in spandrel plates to be 3/16" larger in diameter than the schedule bolt. Holes in splice plates 1/16" larger than the schedule bolt.

LICENSED PROFESSIONAL ENGINEER
LESLIE E. ROBERTSON
No. 34760
THE STATE OF NEW YORK

SPANDREL SPLICE DETAIL A16

1-B2-49

WORTHINGTON, SKILLING, HELLE & JACKSON — Civil & Structural Engineers

PROJECT: THE WORLD TRADE CENTER | TITLE: EXT. WALL TO EL. 363'-SPANDREL SPLICE DET. B | DATE: 3-31-67

REVISIONS

1-26-68

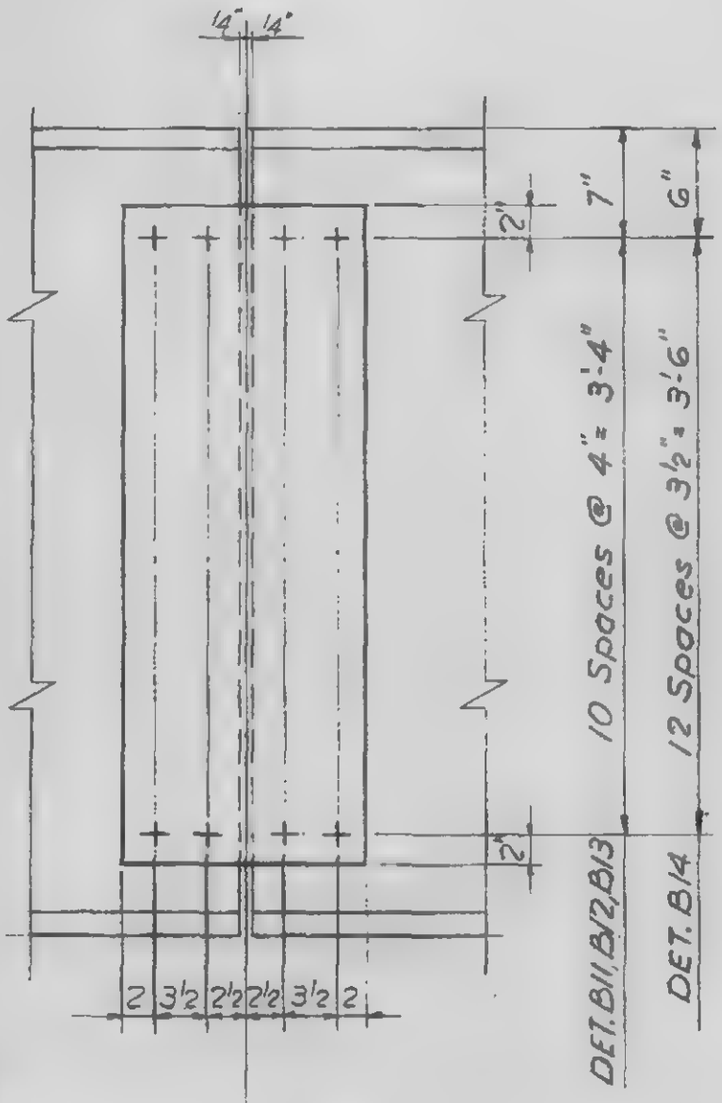

DETAIL B11 THRU B14

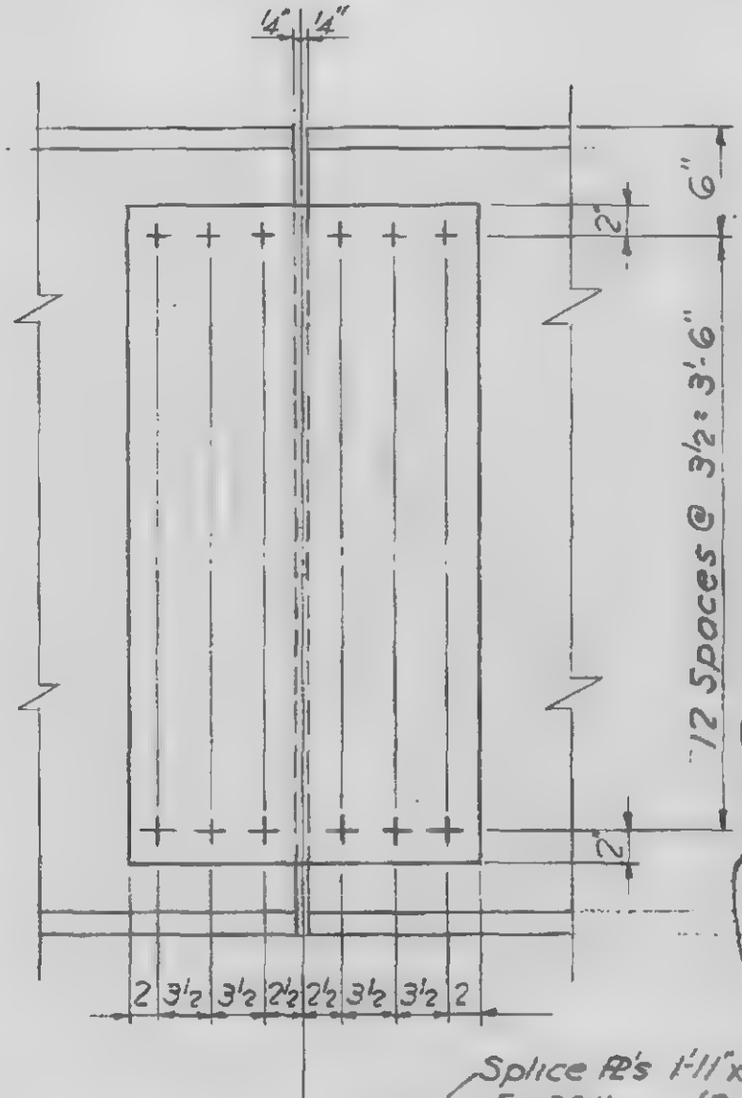

DETAIL B15 & B16

Splice Details	Bolts
B11	44 - 1¼" A490
B12	44 - 1⅛" A490
B13	44 - 1" A490
B14	52 - 1¼" A490
B15	78 - 1¼" A490
B16	78 - 1⅛" A490

Note
Bolt holes in spandrel plates to be 3/16" larger in diameter than the schedule bolt. Holes in splice plates 1/16" larger than the schedule bolt.

LICENSED PROFESSIONAL ENGINEER
LESLIE E. ROBERTSON
No. 34360
UNIVERSITY OF THE STATE OF NEW YORK

SPANDREL SPLICE DETAILS B11, B12, B13, B14, B15 & B16

1-B2-50

WORTHINGTON, SKILLING, HELLE & JACKSON — Civil & Structural Engineers

PROJECT: THE WORLD TRADE CENTER | TITLE: EXT. WALL TO EL. 363' - SECTION A-A | DATE: 3-31-67

REVISIONS

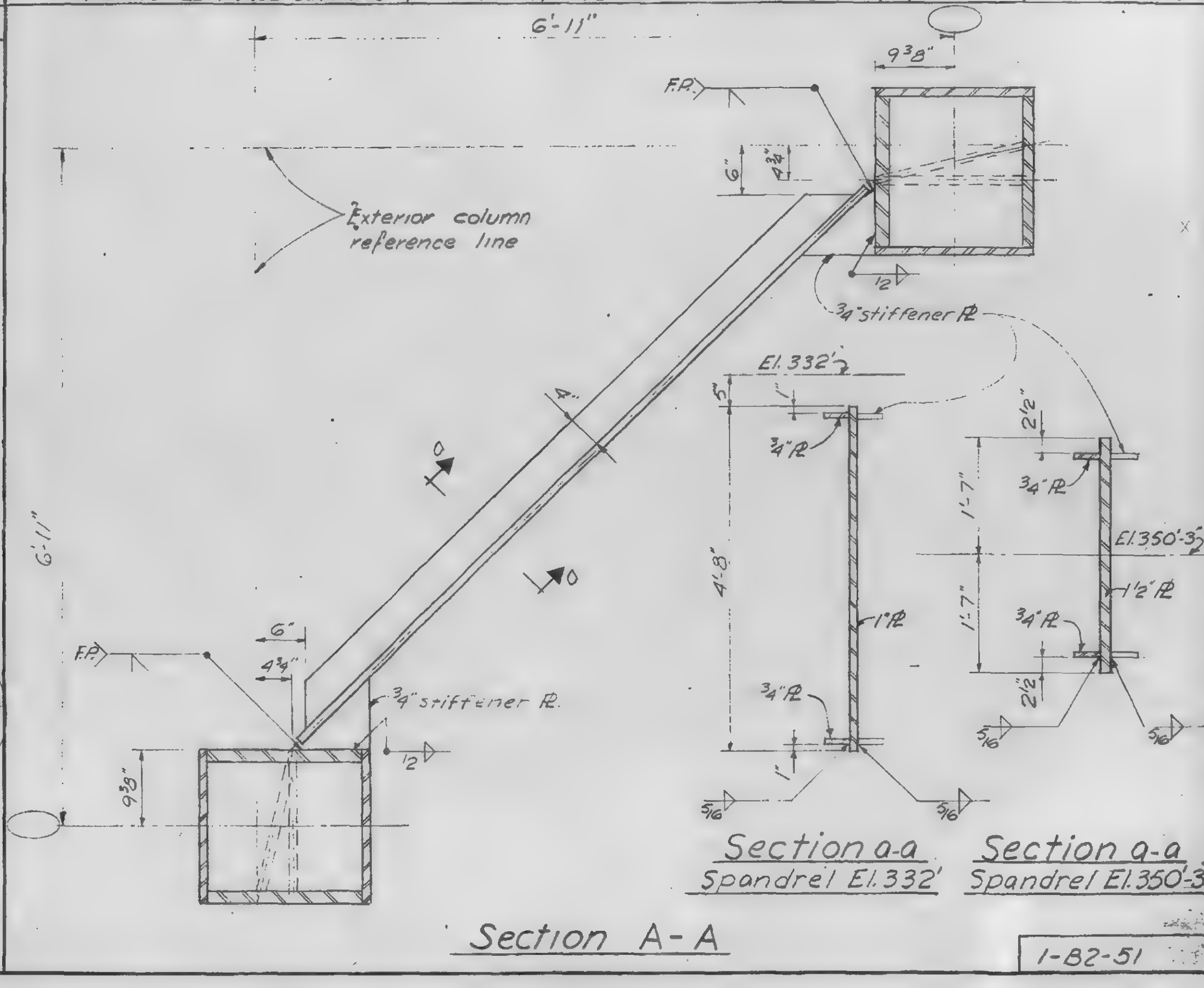

Section a-a
Spandrel El. 332'

Section a-a
Spandrel El. 350'-3"

Section A-A

LICENSED PROFESSIONAL ENGINEER — LESLIE E. ROBERTSON — No. 34360 — UNIVERSITY OF THE STATE OF NEW YORK

1-B2-51

WORTHINGTON, SKILLING, HELLE & JACKSON — Civil & Structural Engineers

PROJECT: THE WORLD TRADE CENTER | TITLE: EXT. WALL TO EL. 363' - SECTION B-B | DATE: 3-31-67

REVISIONS

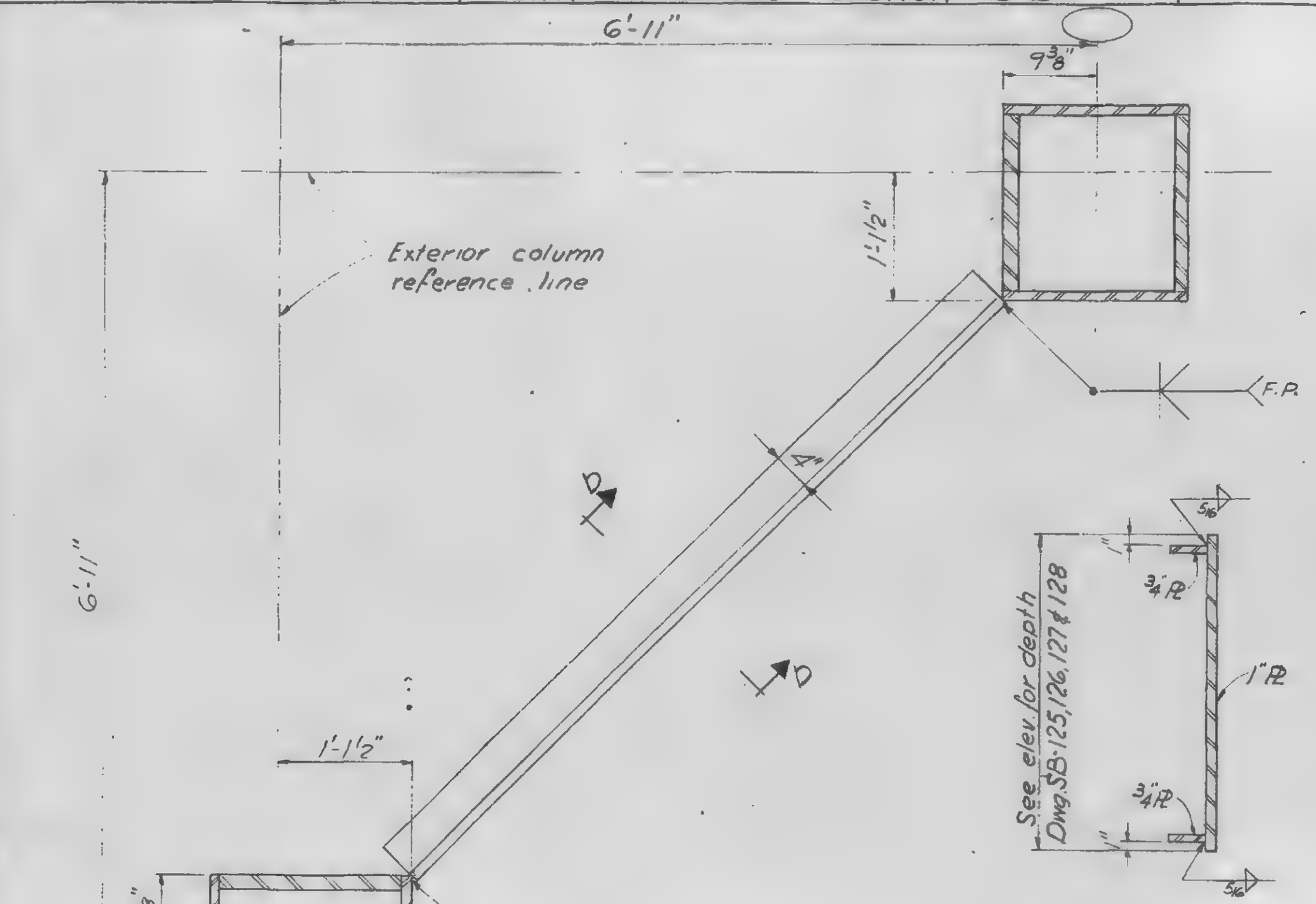

Section B-B

Section b-b

LICENSED PROFESSIONAL ENGINEER
LESLIE E. ROBERTSON
NO. 34900
UNIVERSITY OF THE STATE OF NEW YORK

1-B2-52

WORTHINGTON, SKILLING, HELLE & JACKSON — Civil & Structural Engineers

PROJECT THE WORLD TRADE CENTER | TITLE EXT. WALL TO EL. 363'- SECTION C-C | DATE 3-31-67

REVISIONS

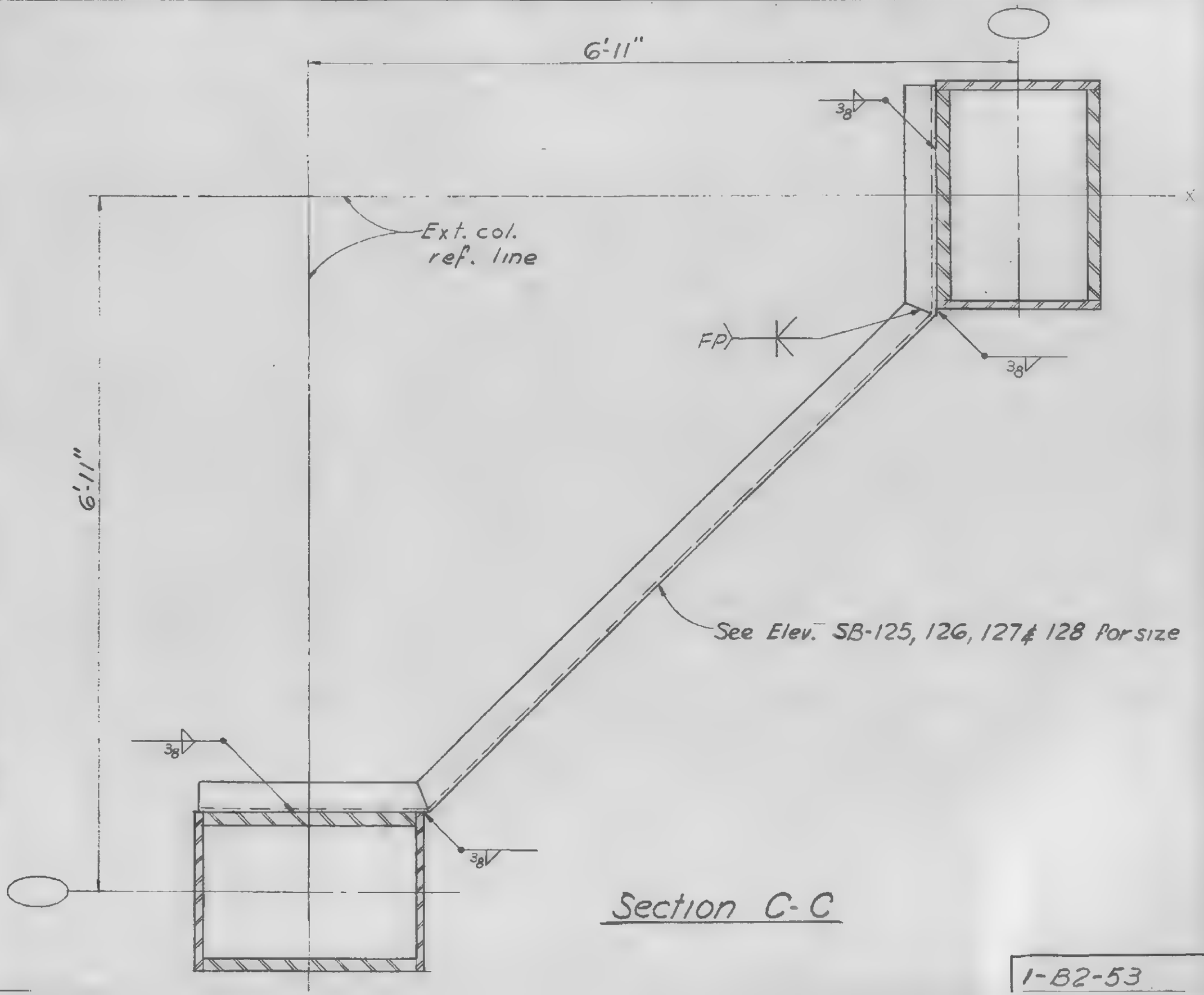

Section C-C

LICENSED PROFESSIONAL ENGINEER
LESLIE E. ROBERTSON
No. 34360
UNIVERSITY OF THE STATE OF NEW YORK

1-B2-53

WORTHINGTON, SKILLING, HELLE & JACKSON — Civil & Structural Engineers

PROJECT: THE WORLD TRADE CENTER | TITLE: EXTERIOR WALL TO EL. 363'- SPANDREL TYPE C | DATE: 3-31-67

REVISIONS

4-24-67

2-15-68

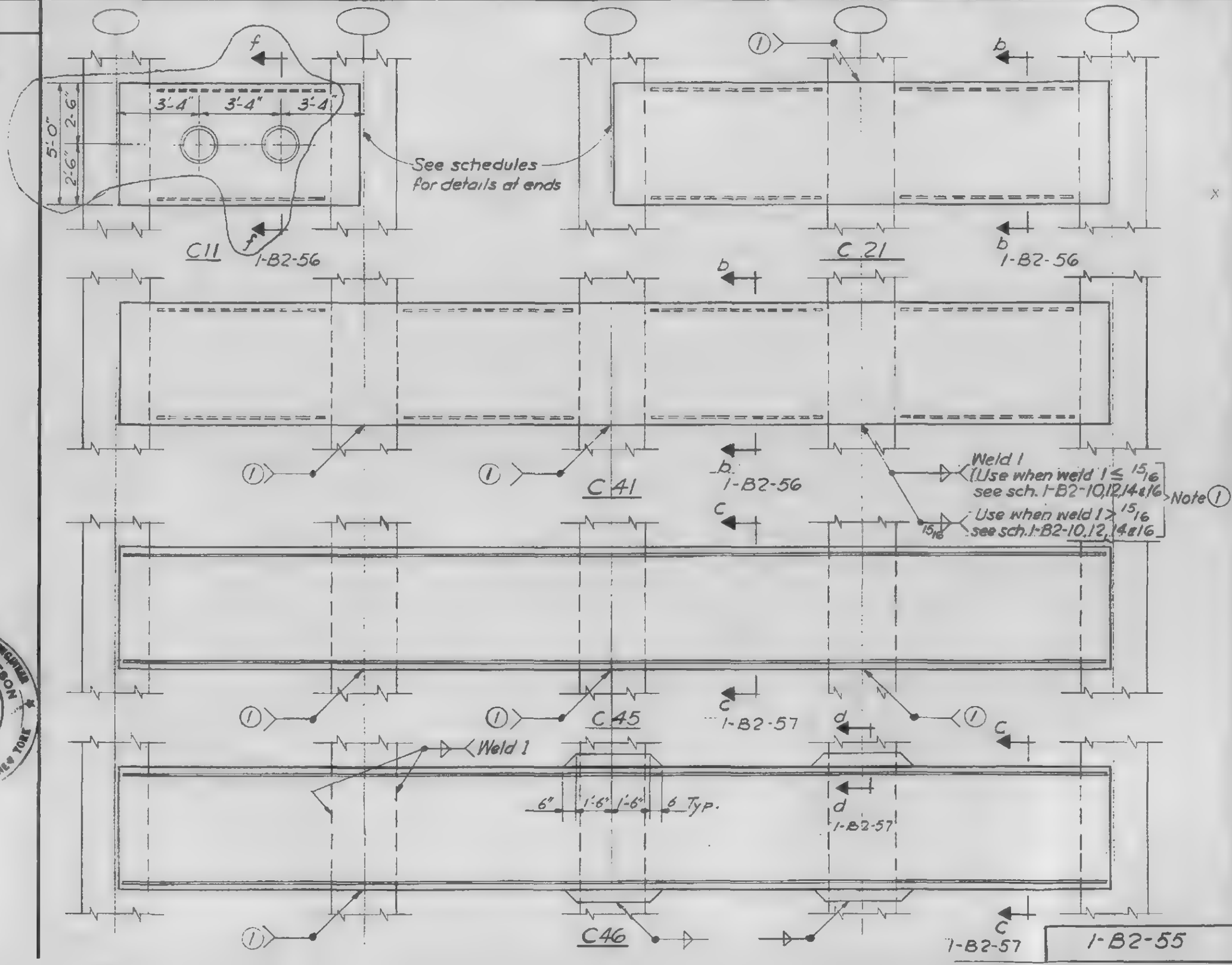

1-B2-55

LICENSED PROFESSIONAL ENGINEER
LESLIE E. ROBERTSON
No. 34360
STATE OF NEW YORK

WORTHINGTON, SKILLING, HELLE & JACKSON — Civil & Structural Engineers

PROJECT: THE WORLD TRADE CENTER | TITLE: EXTERIOR WALL TO El. 363'-SPANDREL TYPE C | DATE: 3-31-67

REVISIONS

5-8-67
2-15-68

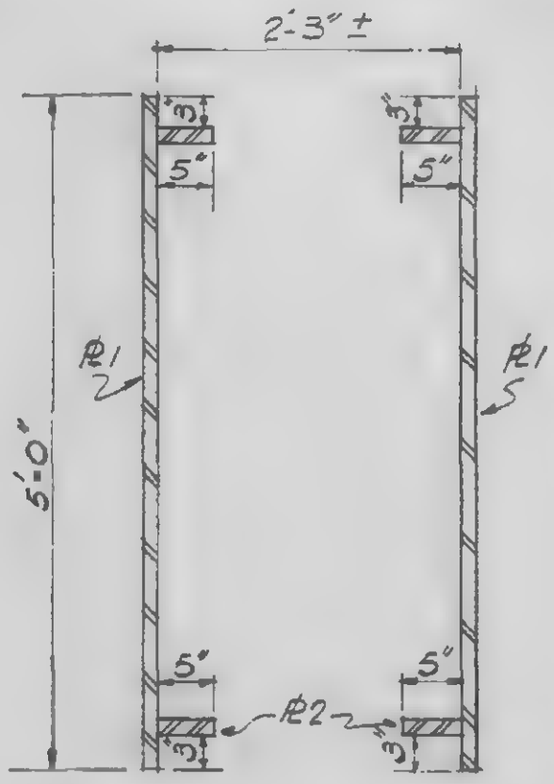

Section b-b

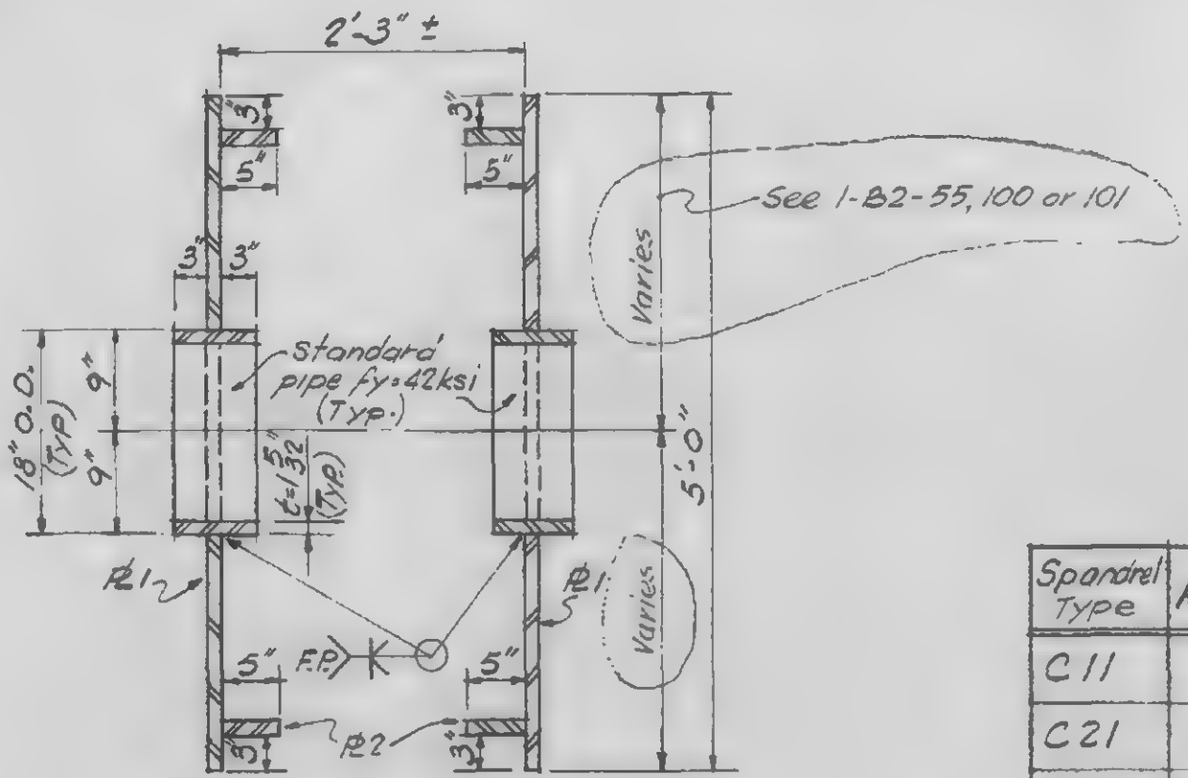

Section f-f

Spandrel Type	#1	#2
C11	1"	1 3/8"
C21	1"	1 3/8"
C41	1"	1 3/8"
C411	1"	1 3/8"
C413	1"	1 3/8"

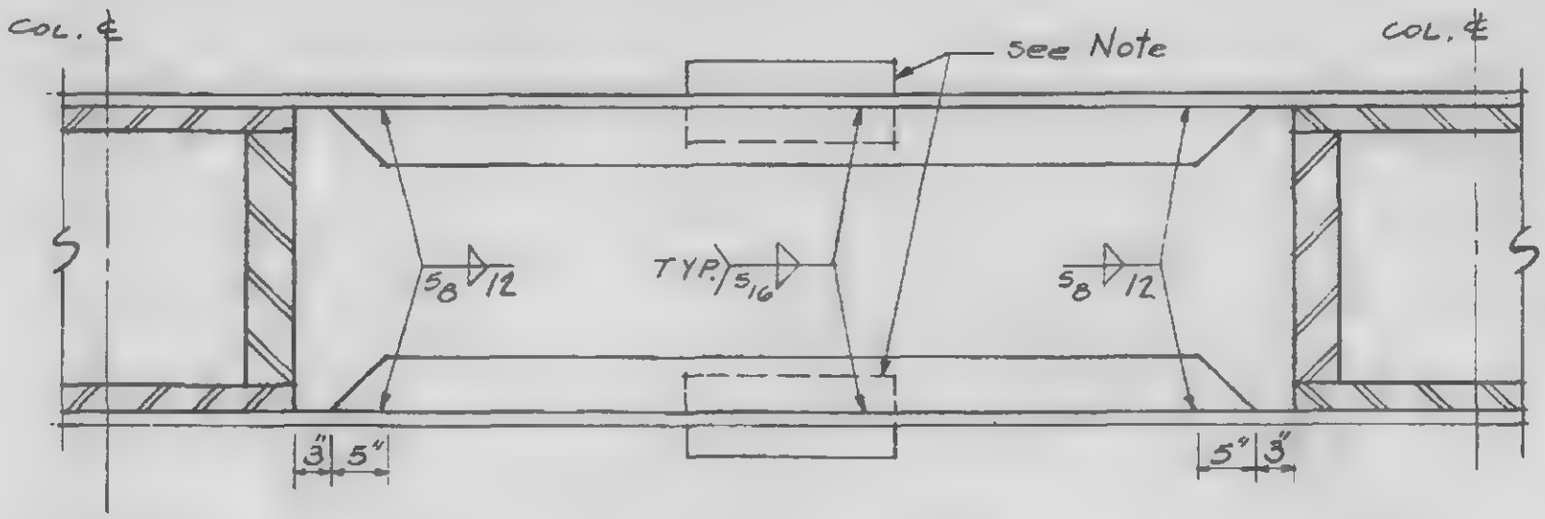

Typical plan for spandrel types C11, C21, C41, C411 & C413

Note:
Pipe exists for spandrel Types C411 & C413 only. For exact location see 1-B2-55, 100 & 101

LICENSED PROFESSIONAL ENGINEER — LESLIE E. ROBERTSON — No. 34360 — UNIVERSITY OF THE STATE OF NEW YORK

1-B2-56

WORTHINGTON, SKILLING, HELLE & JACKSON — Civil & Structural Engineers

PROJECT: THE WORLD TRADE CENTER

TITLE: EXTERIOR WALL TO El. 363'-SPANDREL TYPE C

DATE: 3-31-67

REVISIONS

4-24-67
5- 8-67
2-15-68

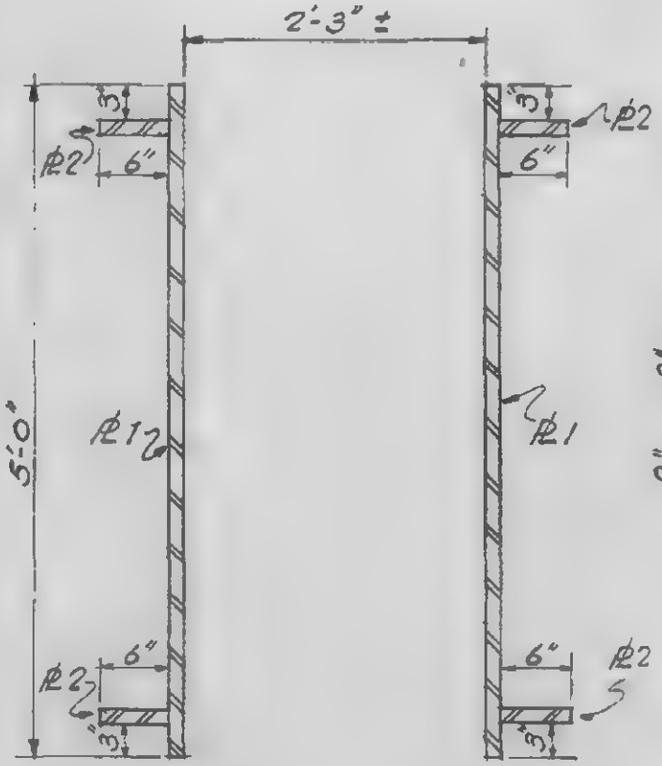

Section C-C

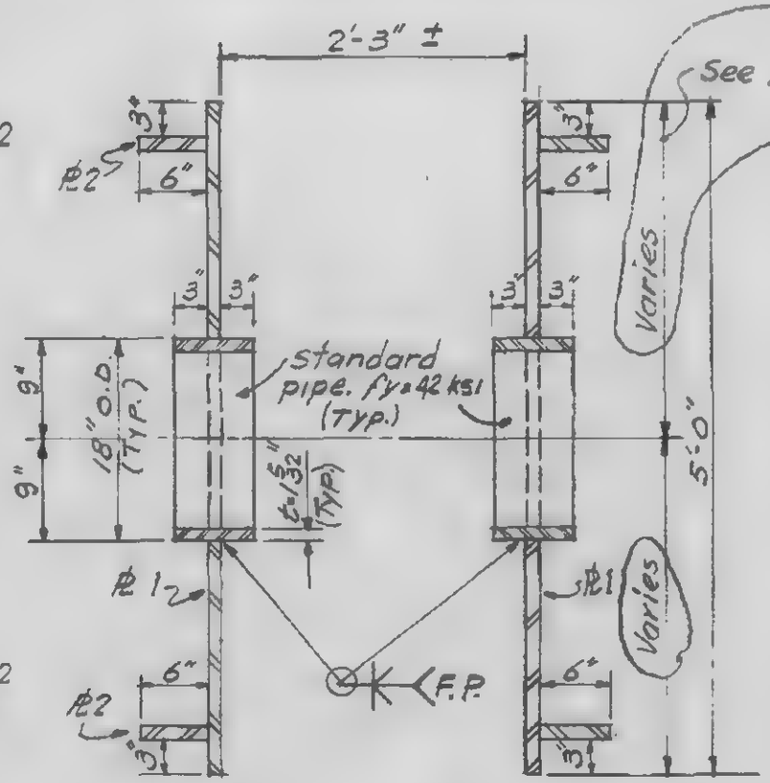

Section e-e

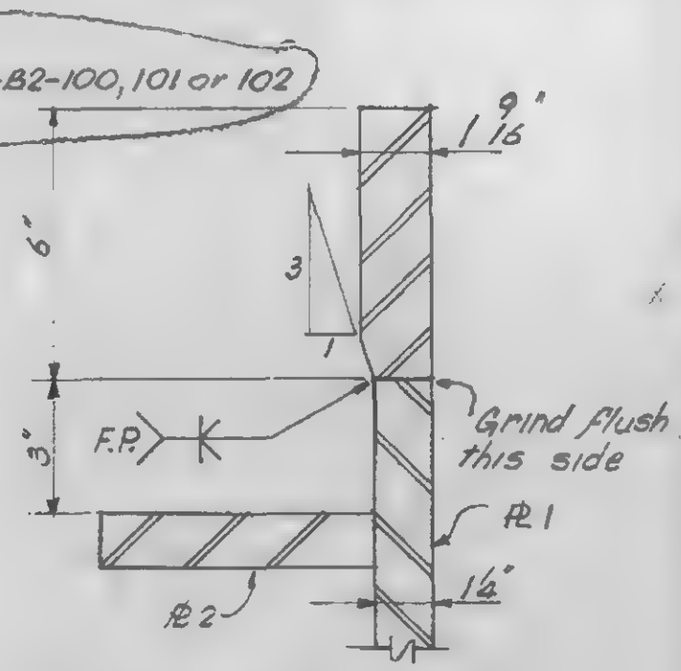

Section d-d

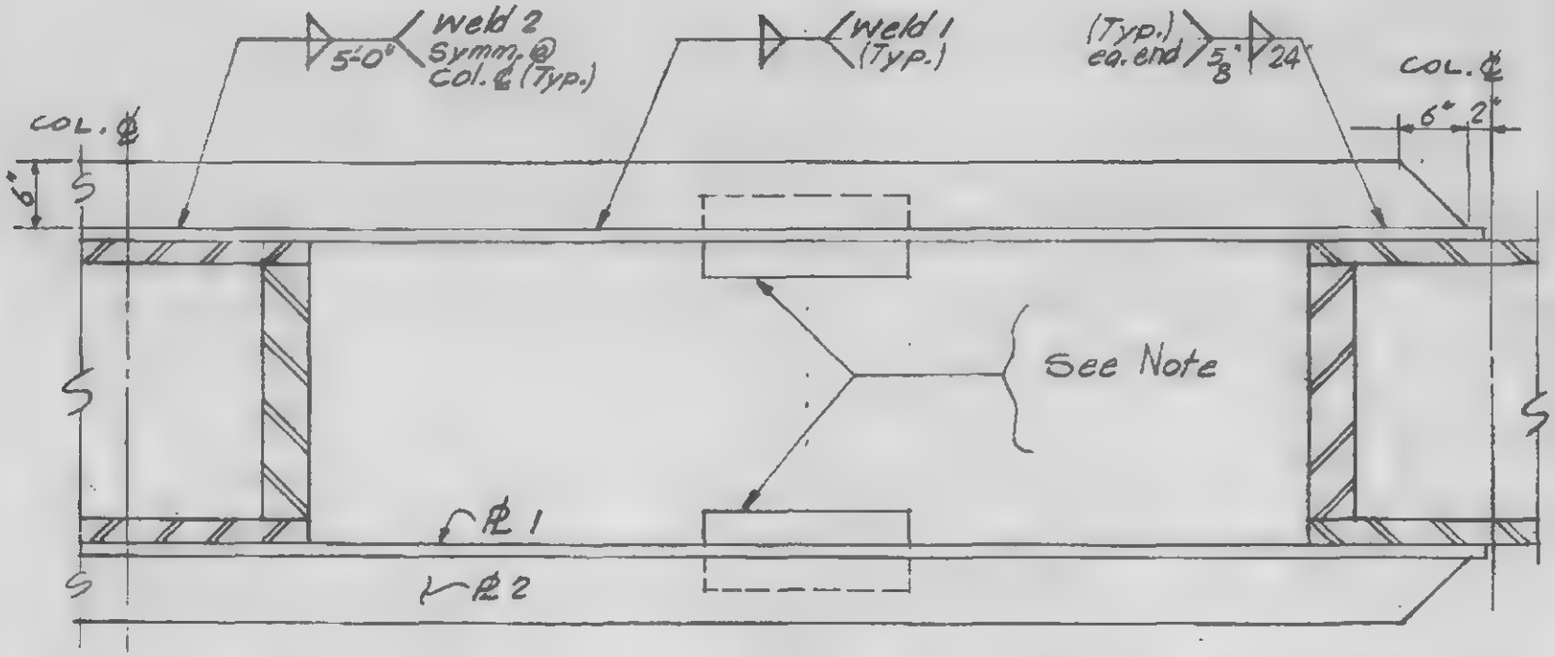

Spandrel Type	#1	#2	Weld 1	Weld 2
C45	1"	1 1/4"	5/16"	5/8"
C46	1 1/4"	1 1/2"	3/8"	3/4"
C452	1"	1 1/4"	5/16"	5/8"
C455	1"	1 1/4"	5/16"	5/8"
C456	1"	1 1/4"	5/16"	5/8"
C457	1"	1 1/4"	5/16"	5/8"
C458	1"	1 1/4"	5/16"	5/8"
C459	1"	1 1/4"	5/16"	5/8"

Note:
Pipe exists for all spandrel types except C45 & C46.
For exact location see sh. 1-B2-100, 101 & 102

LICENSED PROFESSIONAL ENGINEER — LESLIE E. ROBERTSON — No. 34360 — UNIVERSITY OF THE STATE OF NEW YORK

Typical plan for spandrel types C45, C46, C452, C455, C456, C457, C458 & C459

1-B2-57

WORTHINGTON, SKILLING, HELLE & JACKSON — Civil & Structural Engineers

PROJECT THE WORLD TRADE CENTER | TITLE EXT. WALL TO EL. 363'-STRUT TYPE D | DATE 3-31-67

REVISIONS

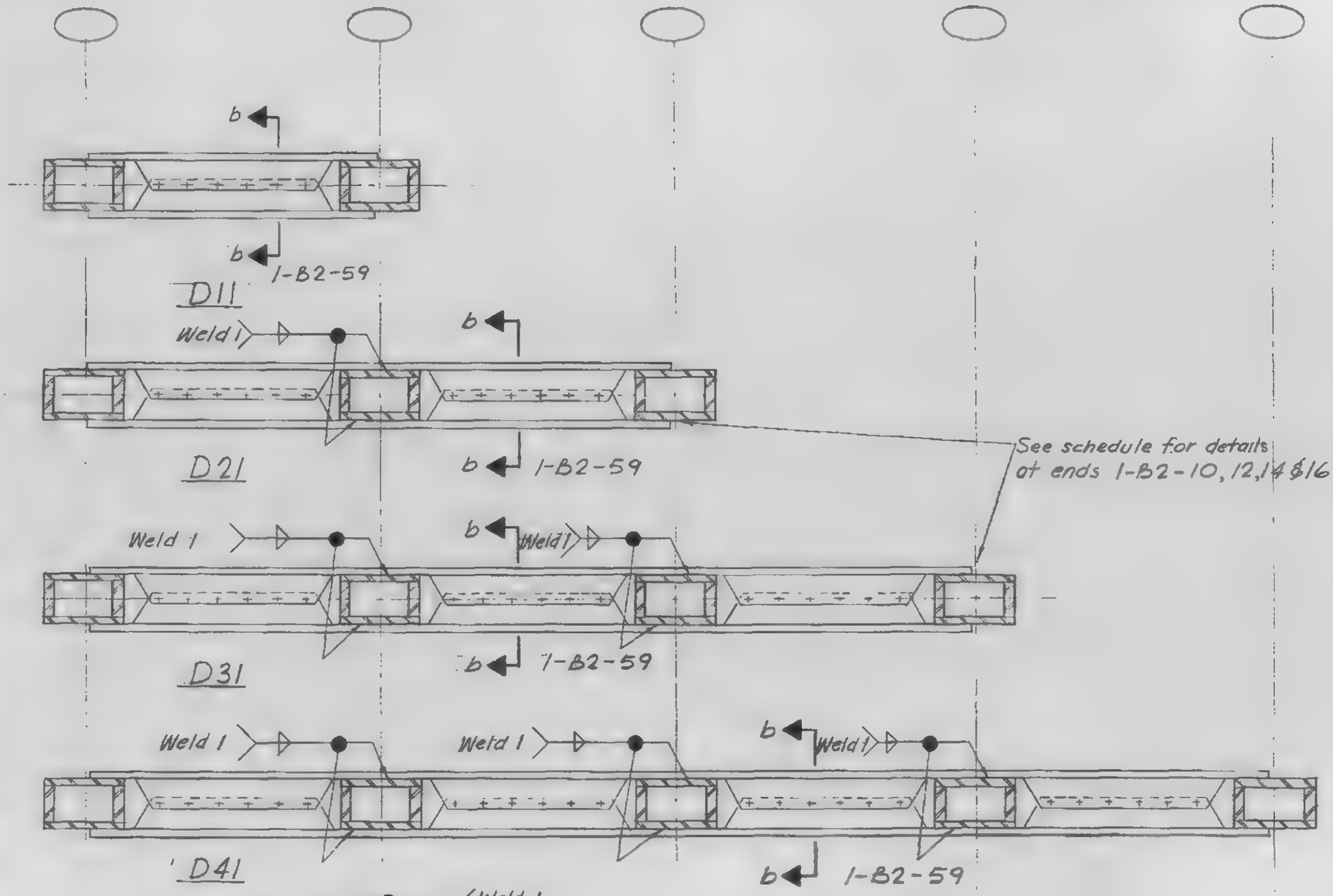

ELEVATION AT BRACING

Note: for weld 1 - see schedule 1-B2-10, 12, 14 & 16

STRUT TYPE 11, 21, 31 & 41.

1-B2-58

LICENSED PROFESSIONAL ENGINEER
LESLIE E. ROBERTSON
No. 34360
UNIVERSITY OF THE STATE OF NEW YORK

WORTHINGTON, SKILLING, HELLE & JACKSON — Civil & Structural Engineers

PROJECT THE WORLD TRADE CENTER | TITLE EXT. WALL TO EL. 363 - STRUT TYPE D | DATE 3-31-67

REVISIONS

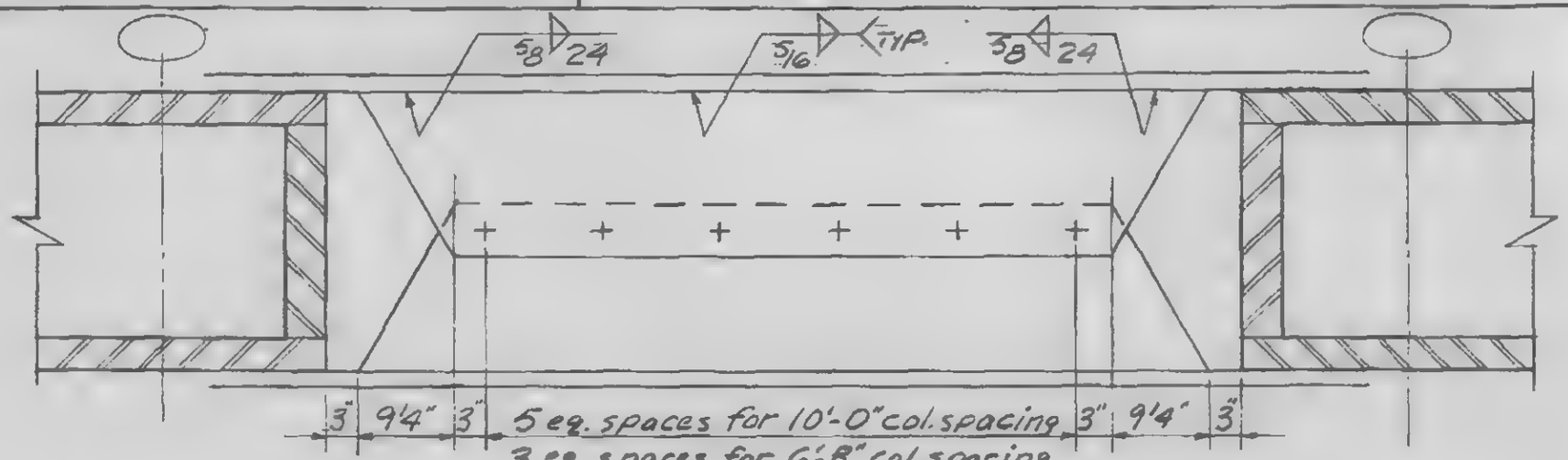

Typical plan

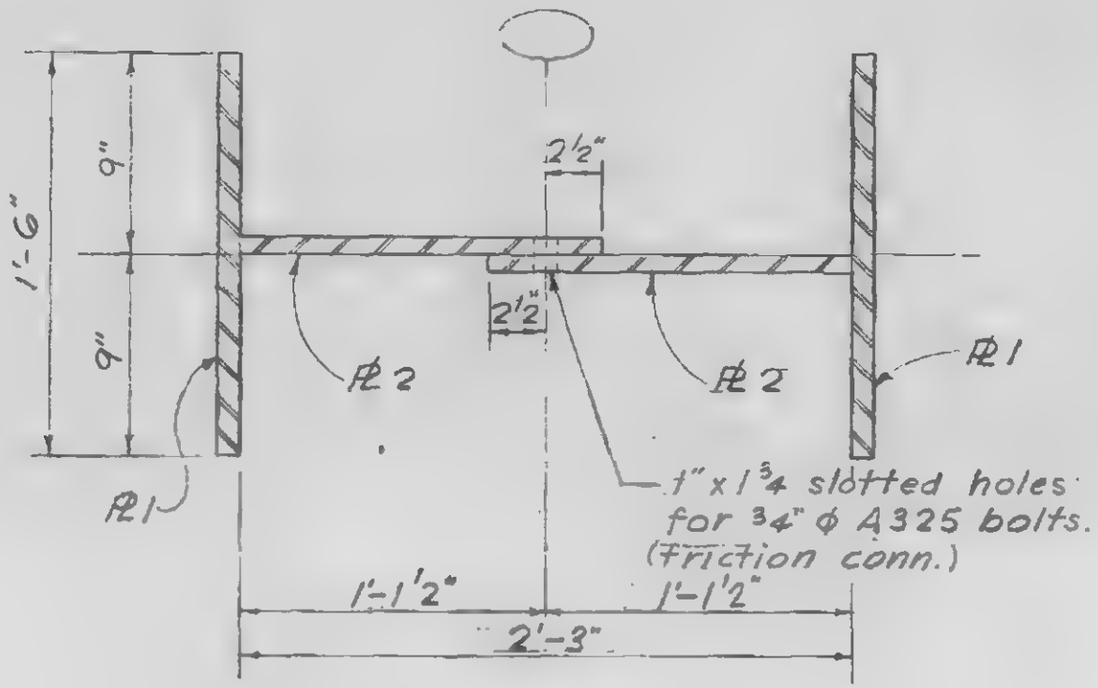

Section b-b

Strut type	R1	R2
D11	1½"	¾"
D21	1½"	¾"
D31	1½"	¾"
D41	1½"	¾"

STRUT TYPE D11, D21, D31 & D41

LICENSED PROFESSIONAL ENGINEER LESLIE E. ROBERTSON No. 34360 UNIVERSITY OF THE STATE OF NEW YORK

1-B2-59

WORTHINGTON, SKILLING, HELLE & JACKSON — Civil & Structural Engineers

PROJECT THE WORLD TRADE CENTER | TITLE EXT. WALL TO EL.363'- STRUT TYPE E | DATE 3-31-67

REVISIONS

4-24-67

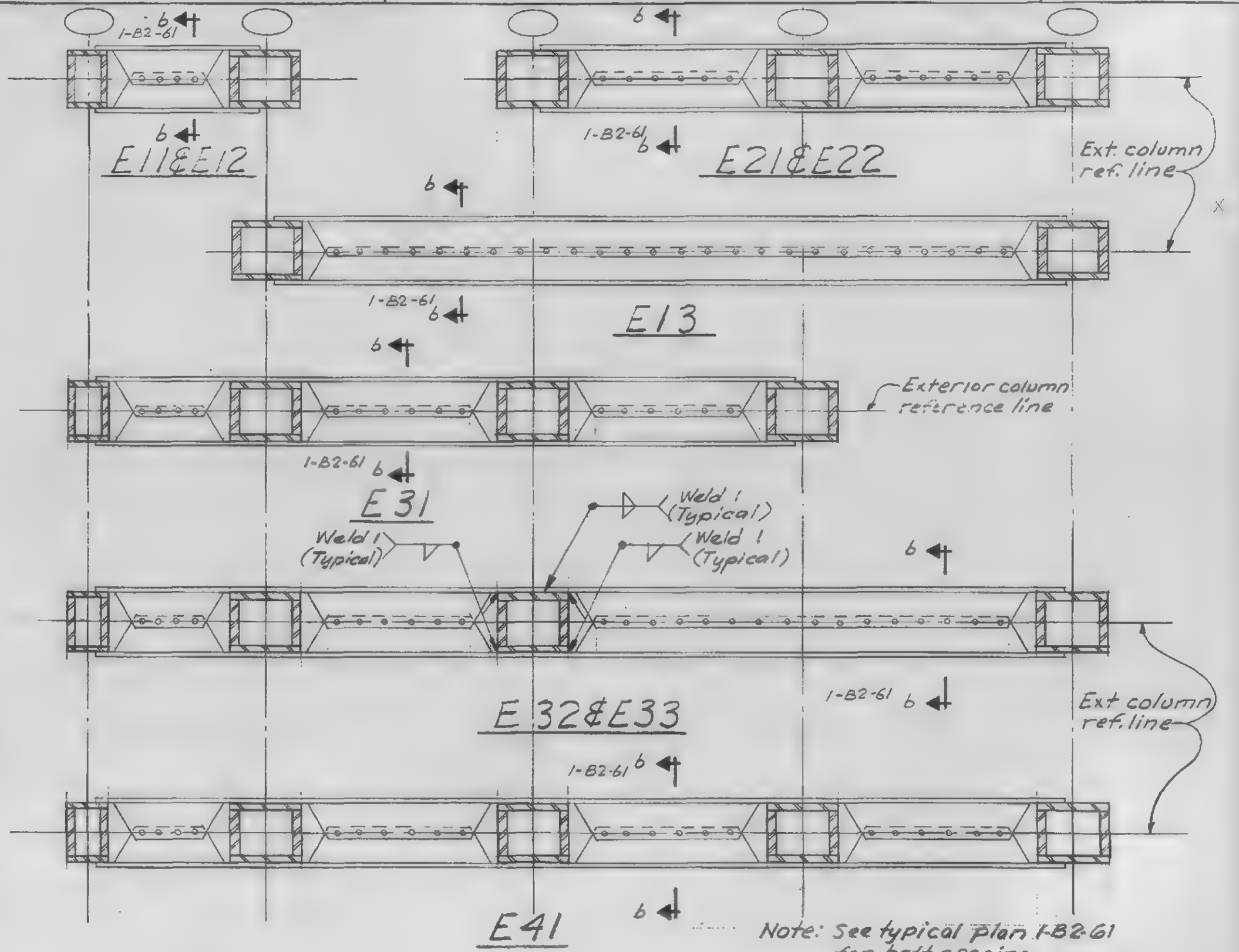

Note: See typical plan 1-B2-61 for bolt spacing. For weld 1 and details at ends see schedule 1-B2-10,12,14&16

1-B2-60

LICENSED PROFESSIONAL ENGINEER
LESLIE E. ROBERTSON
No. 34360
UNIVERSITY OF THE STATE OF NEW YORK

WORTHINGTON, SKILLING, HELLE & JACKSON — Civil & Structural Engineers

PROJECT: WORLD TRADE CENTER | TITLE: EXT WALL TO ELEV. 363 - STRUT TYPE E | DATE: 3-31-67

REVISIONS

Strut Type	R1	R2
E 11	1½	¾
E 12	1½	¾
E 13	1¼	¾
E 21	1½	¾
E 22	1¼	¾
E 31	1½	¾
E 32	1½	¾
E 33	1¼	¾
E 41	1½	¾

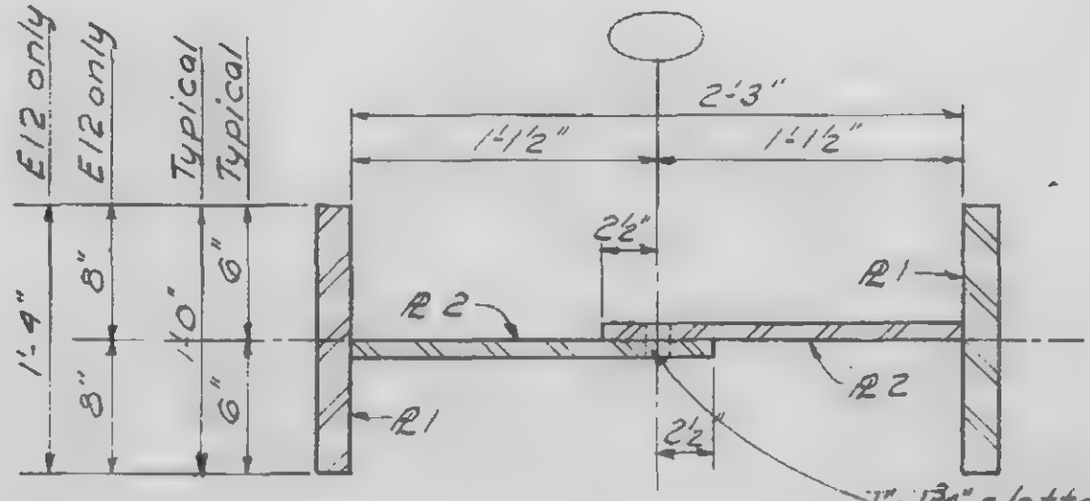

Section b-b

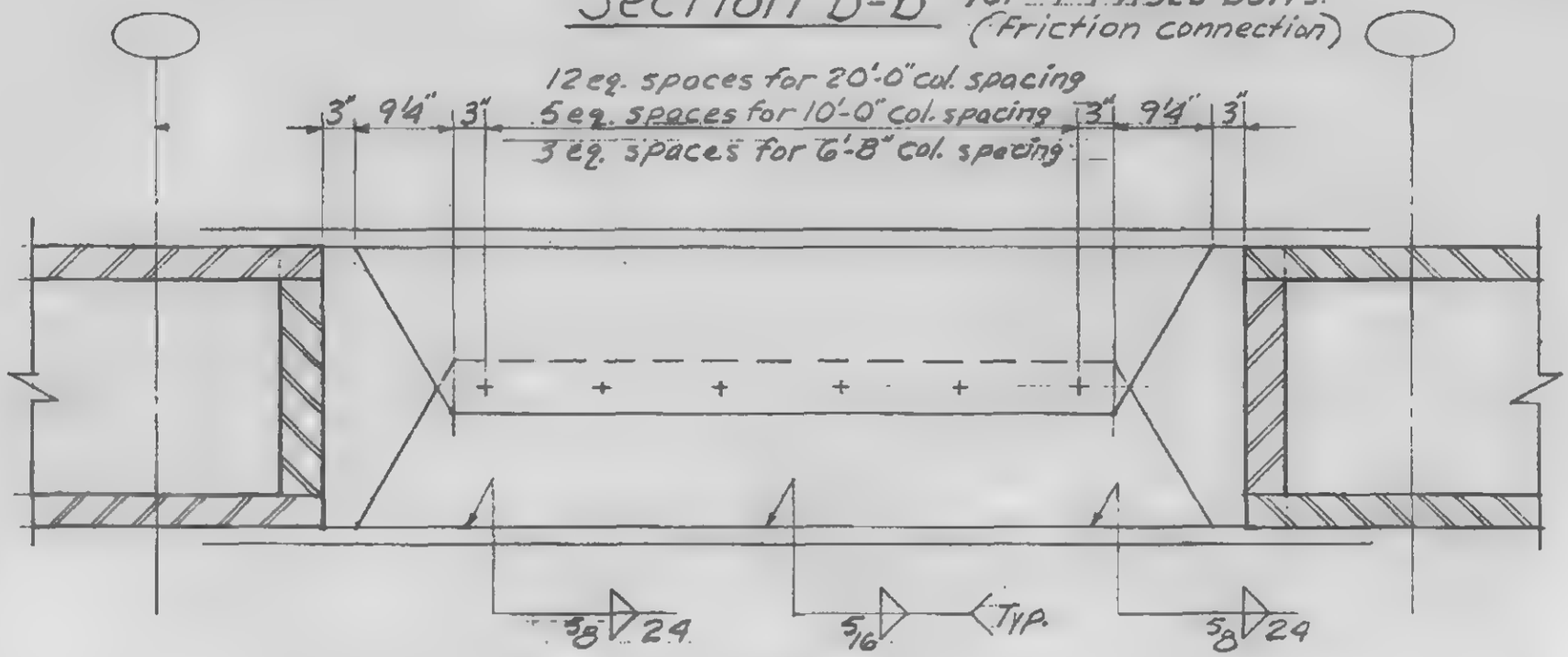

Typical plan

LICENSED PROFESSIONAL ENGINEER
LESLIE E. ROBERTSON
No. 34360
UNIVERSITY OF THE STATE OF NEW YORK

1-B2-61

WORTHINGTON, SKILLING, HELLE & JACKSON — Civil & Structural Engineers

PROJECT: THE WORLD TRADE CENTER | TITLE: EXT. WALL TO EL. 363'- STRUT TYPE F | DATE: 3-31-67

REVISIONS

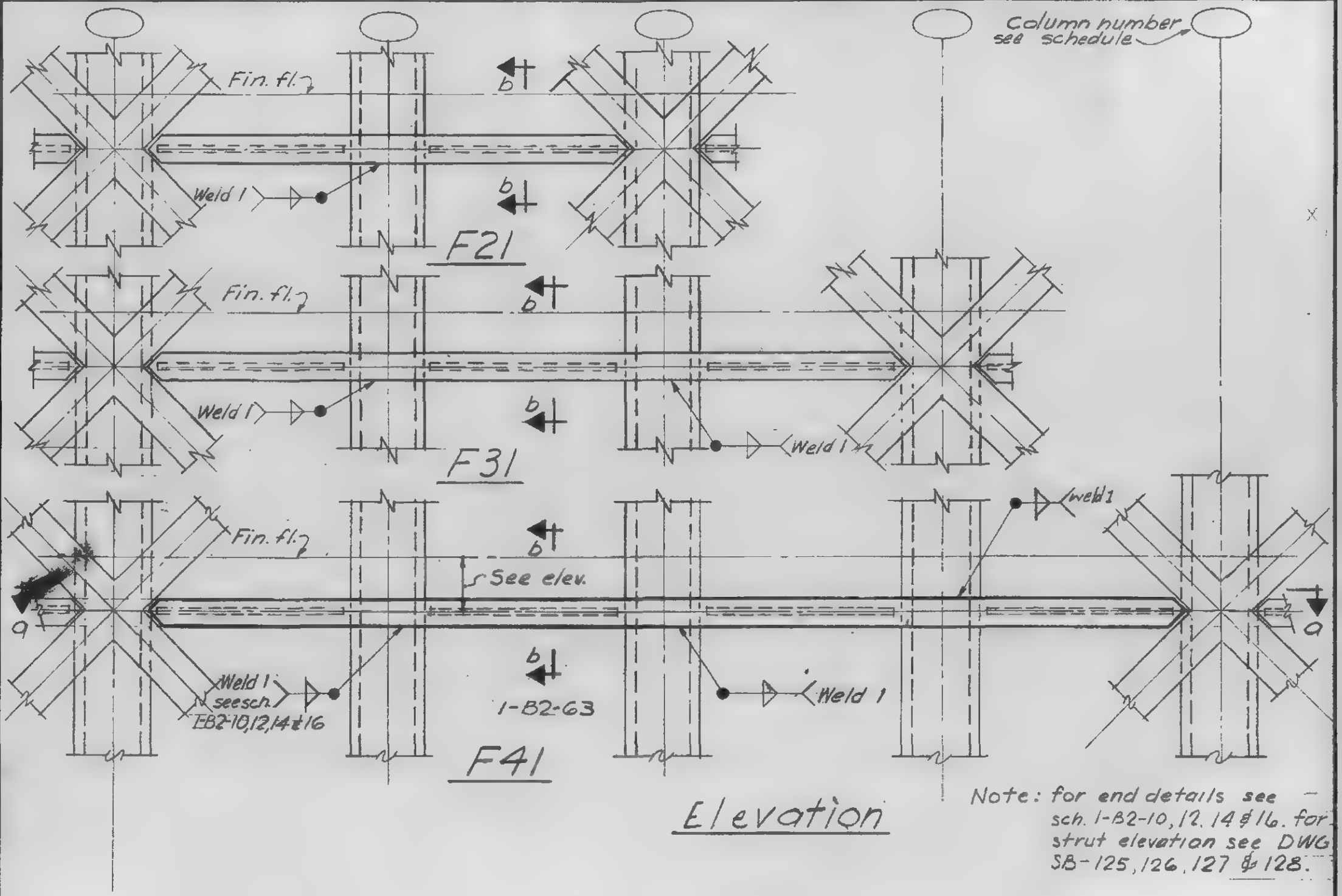

Elevation

Note: for end details see sch. 1-B2-10, 12, 14 & 16. for strut elevation see DWG SB-125, 126, 127 & 128.

LICENSED PROFESSIONAL ENGINEER LESLIE E. ROBERTSON No. 34360 UNIVERSITY OF THE STATE OF NEW YORK

1-B2-62

WORTHINGTON, SKILLING, HELLE & JACKSON — Civil & Structural Engineers

PROJECT: THE WORLD TRADE CENTER | TITLE: EXT. WALL TO EL. 363'- STRUT TYPE F | DATE: 3-31-67

REVISIONS

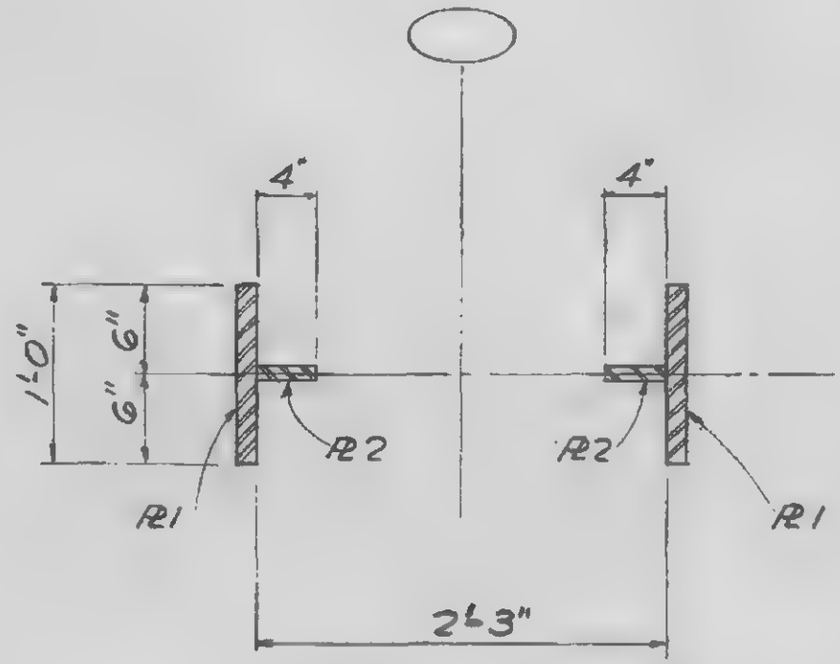

Section b-b

Strut Type	R1	R2
F21	1¼"	¾"
F31	1¼"	¾"
F41	1¼"	¾"

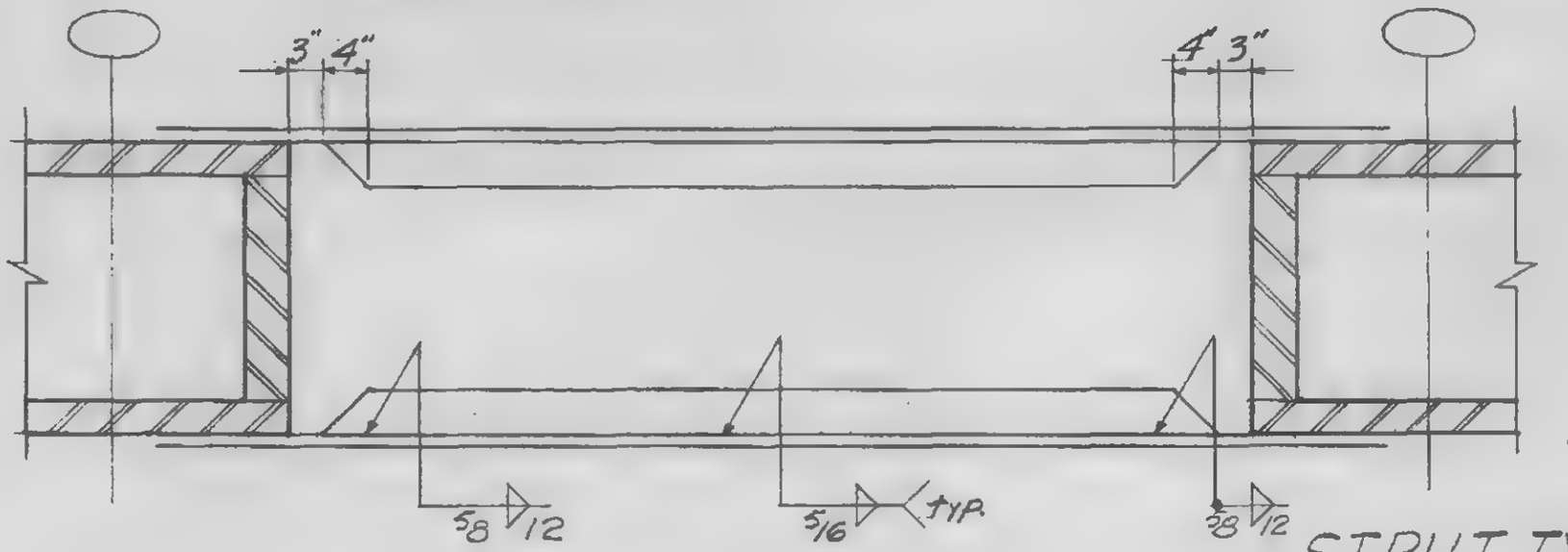

Typical plan

STRUT TYPE-F21, F31 & F41

1-B2-63

LICENSED PROFESSIONAL ENGINEER
LESLIE E. ROBERTSON
No. 34360
UNIVERSITY OF THE STATE OF NEW YORK

WORTHINGTON, SKILLING, HELLE & JACKSON — Civil & Structural Engineers

PROJECT THE WORLD TRADE CENTER | TITLE EXT. WALL TO EL. 363 - STRUT TYPE H | DATE 3-31-67

REVISIONS

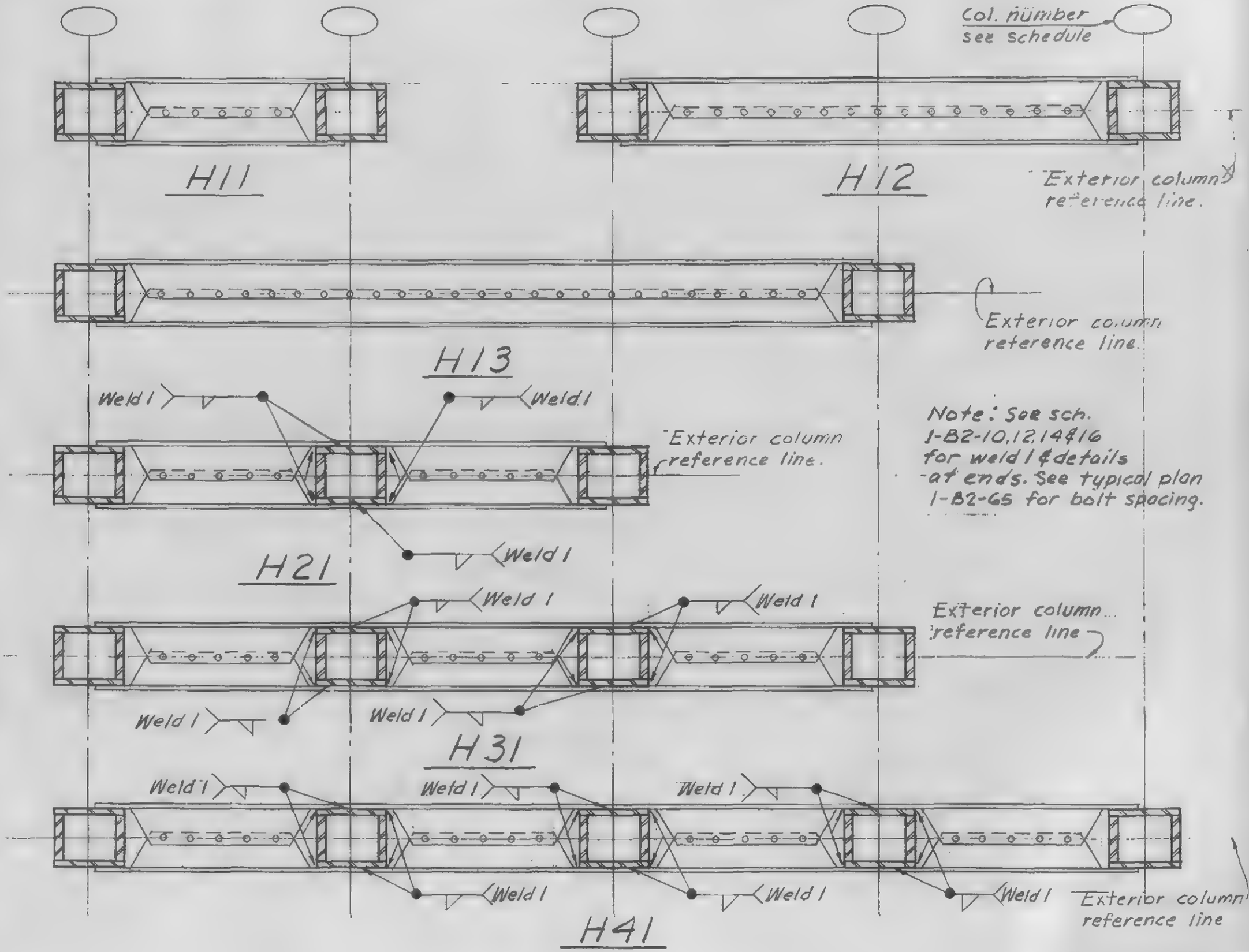

Note: See sch. 1-B2-10, 12, 14 & 16 for weld 1 & details at ends. See typical plan 1-B2-65 for bolt spacing.

LICENSED PROFESSIONAL ENGINEER
LESLIE E. ROBERTSON
No. 34360
STATE OF NEW YORK

1-B2-64

WORTHINGTON, SKILLING, HELLE & JACKSON — Civil & Structural Engineers

PROJECT THE WORLD TRADE CENTER | TITLE EXT. WALL TO EL. 363 STRUT TYPE H | DATE 3-31-67

REVISIONS

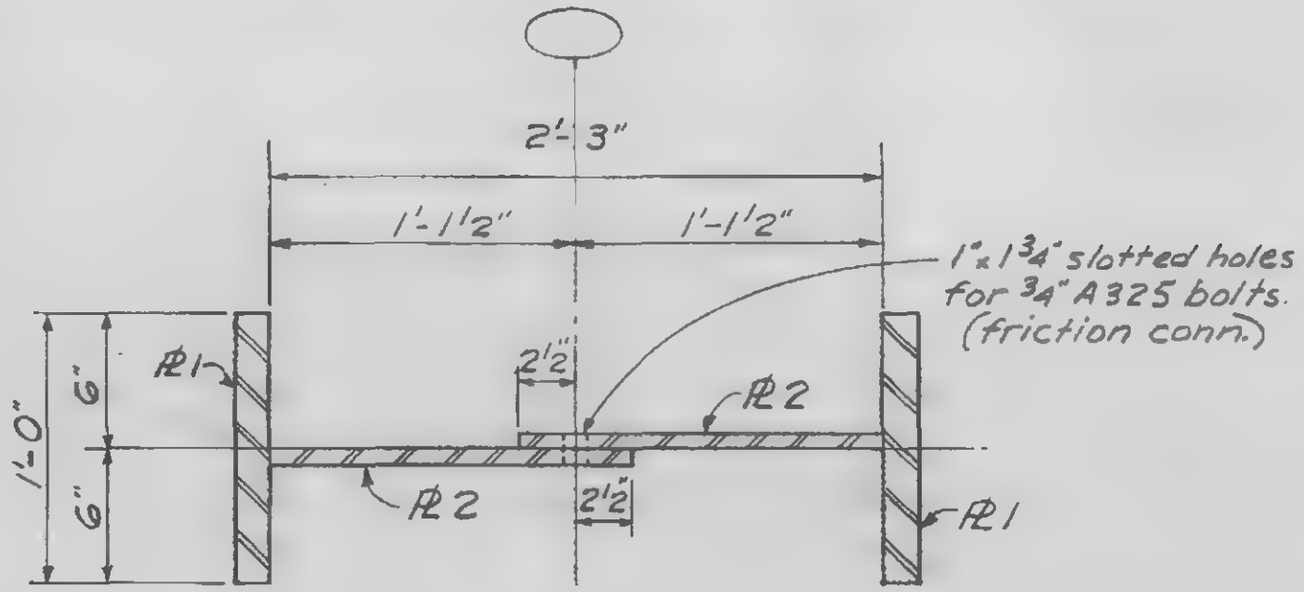

Section b-b

Strut Type	PL 1	PL 2
H 11	1/2	3/4
H 12	1/2	3/4
H 13	1/2	3/4
H 21	1/2	3/4
H 31	1/2	3/4
H 41	1/2	3/4

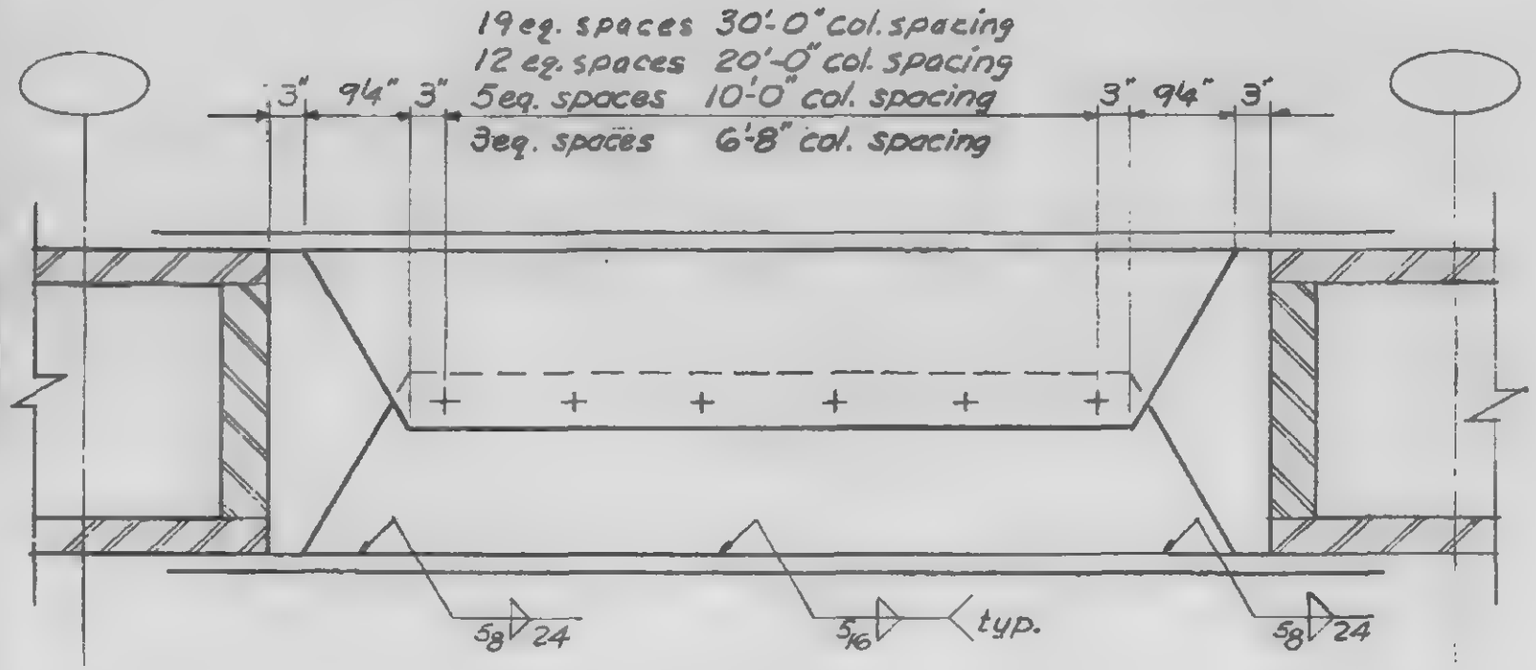

Typical Plan

LICENSED PROFESSIONAL ENGINEER
LESLIE E. ROBERTSON
No. 34360
UNIVERSITY OF THE STATE OF NEW YORK

1-B2-65

WORTHINGTON, SKILLING, HELLE & JACKSON — Civil & Structural Engineers

PROJECT: THE WORLD TRADE CENTER | TITLE: EXT. WALL TO EL. 363' - BRACING TYPE G | DATE: 3-31-67

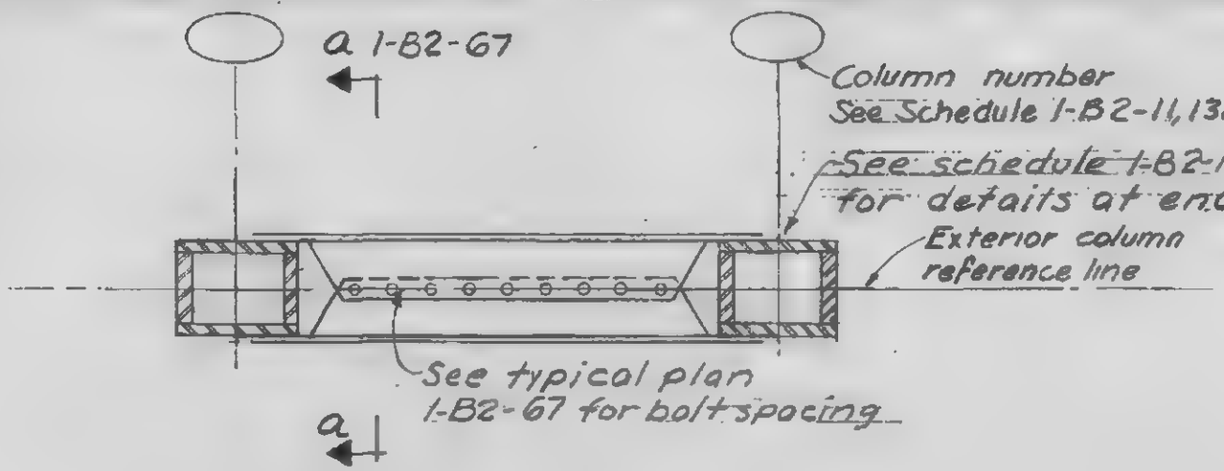

BRACING TYPE G11, G13 & G14

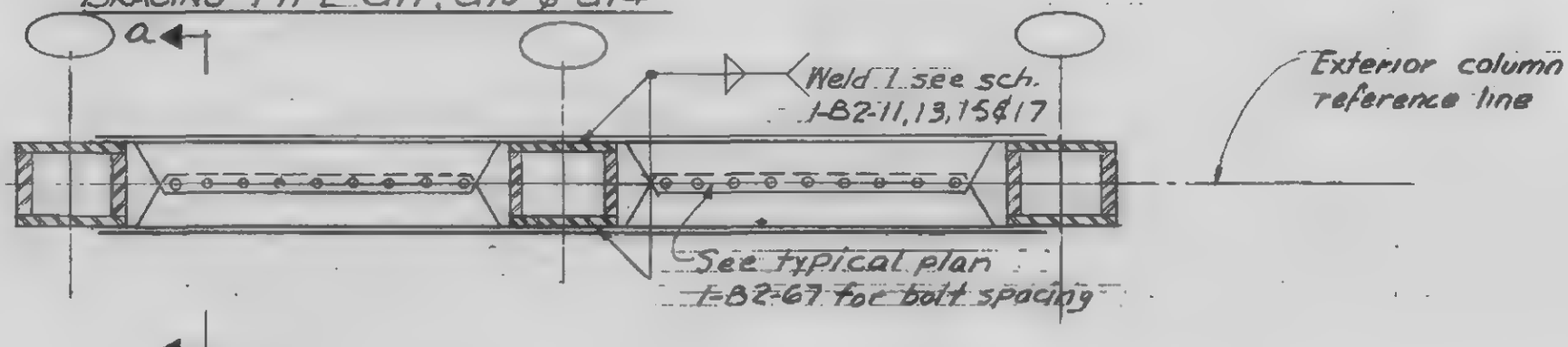

BRACING TYPE G21 Thru G25 & G27 & G28

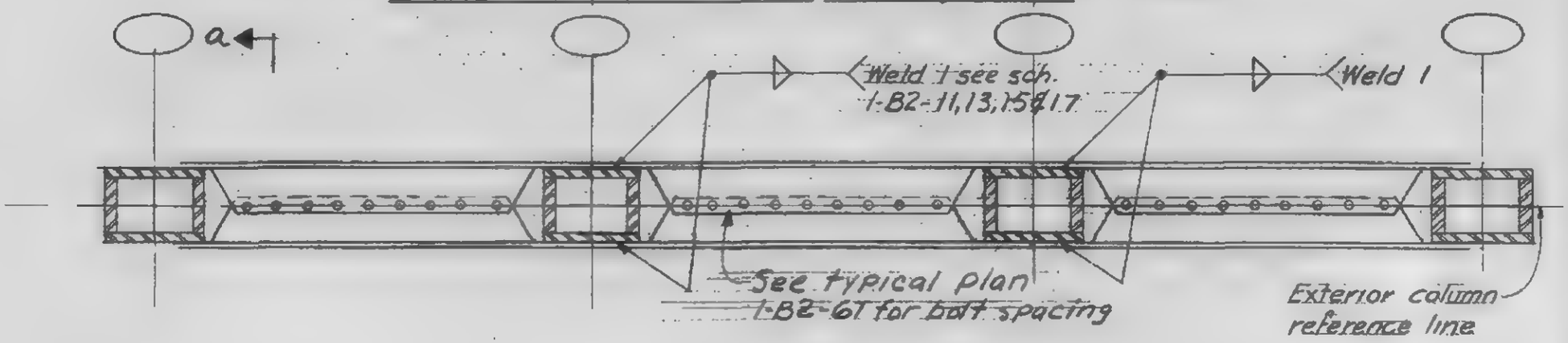

BRACING TYPE G32, G33 & G34

LICENSED PROFESSIONAL ENGINEER
LESLIE E. ROBERTSON
No. 34360
UNIVERSITY OF THE STATE OF NEW YORK

WORTHINGTON, SKILLING, HELLE & JACKSON — Civil & Structural Engineers

PROJECT: THE WORLD TRADE CENTER | TITLE: EXT. WALL TO EL. 363' - BRACING TYPE G | DATE: 3-31-67

REVISIONS

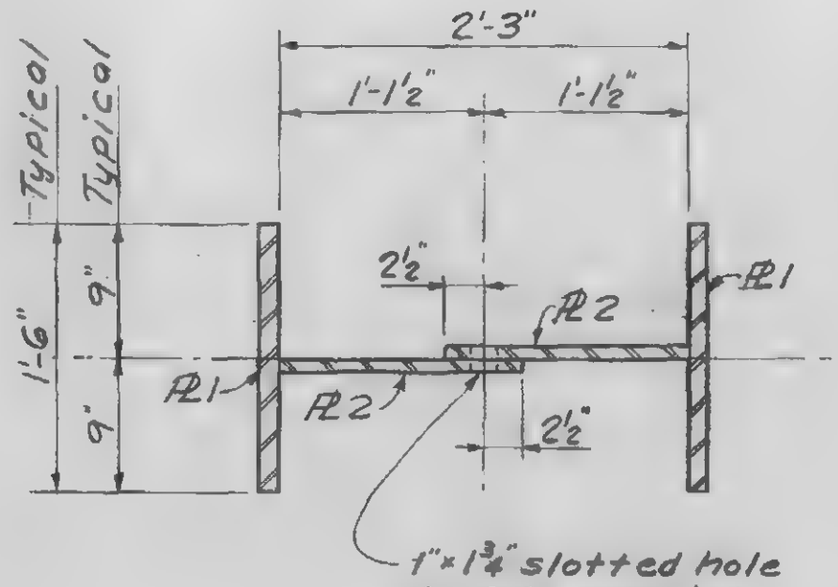

Bracing Type	PL 1	PL 2
G11	1'4	¾
G13	1'2	¾
G14	1 5/8	¾
G21	1'4	¾
G22	1 3/8	¾
G23	1'2	¾
G24	1 5/8	¾
G25	1 ¾	¾
G27	2	¾
G28	2'8	¾
G32	1 3/8	¾
G33	1'2	¾
G34	1 5/8	¾

Section a-a

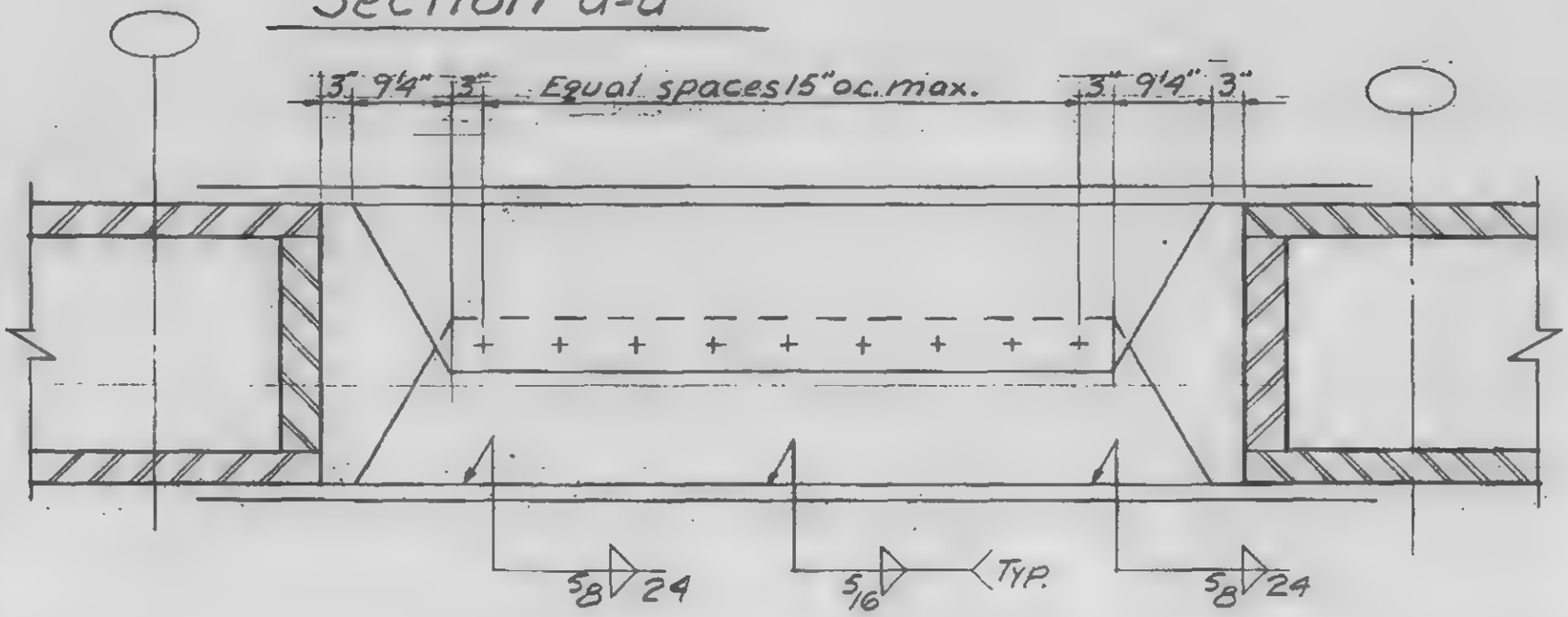

Typical plan

LICENSED PROFESSIONAL ENGINEER
LESLIE E. ROBERTSON
No. 34360
UNIVERSITY OF THE STATE OF NEW YORK

1-B2-67

WORTHINGTON, SKILLING, HELLE & JACKSON — Civil & Structural Engineers

PROJECT: THE WORLD TRADE CENTER | TITLE: EXT. WALL TO EL. 363 - TRUSS TYPE T | DATE: 3-31-67

REVISIONS

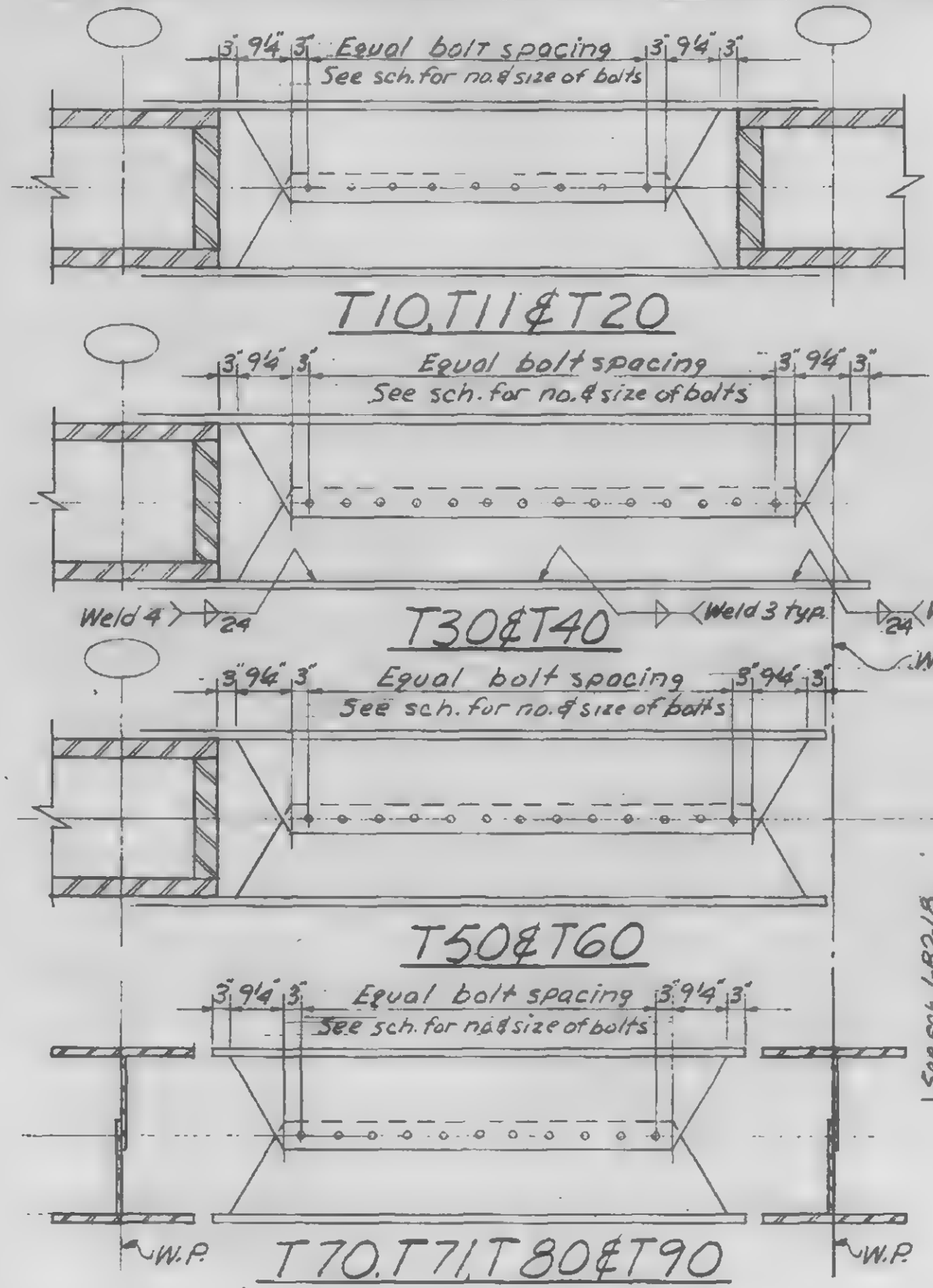

Truss Type	No & size of bolts *
T10	16 - ¾"ϕ
T11	13 - ¾"ϕ
T20	26 - ⅞"ϕ
T30	16 - 1"ϕ
T40	18 - ¾"ϕ
T50	12 - ¾"ϕ
T60	20 - ¾"ϕ
T70	6 - ¾"ϕ
T71	6 - ⅞"ϕ
T80	13 - ¾"ϕ
T90	16 - ¾"ϕ

* All bolts A325

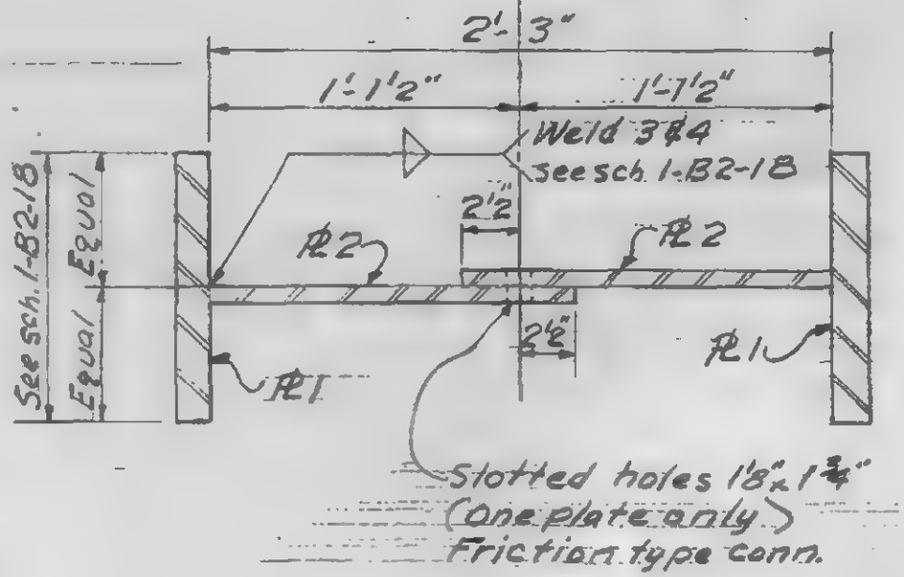

LICENSED PROFESSIONAL ENGINEER
LESLIE E. ROBERTSON
No. 34360
UNIVERSITY OF THE STATE OF NEW YORK

1-B2-68

WORTHINGTON, SKILLING, HELLE & JACKSON — Civil & Structural Engineers

PROJECT THE WORLD TRADE CENTER | TITLE EXT. WALL TO EL. 363'- DETAILS 1, 2 & 3 | DATE 3-31-67

REVISIONS

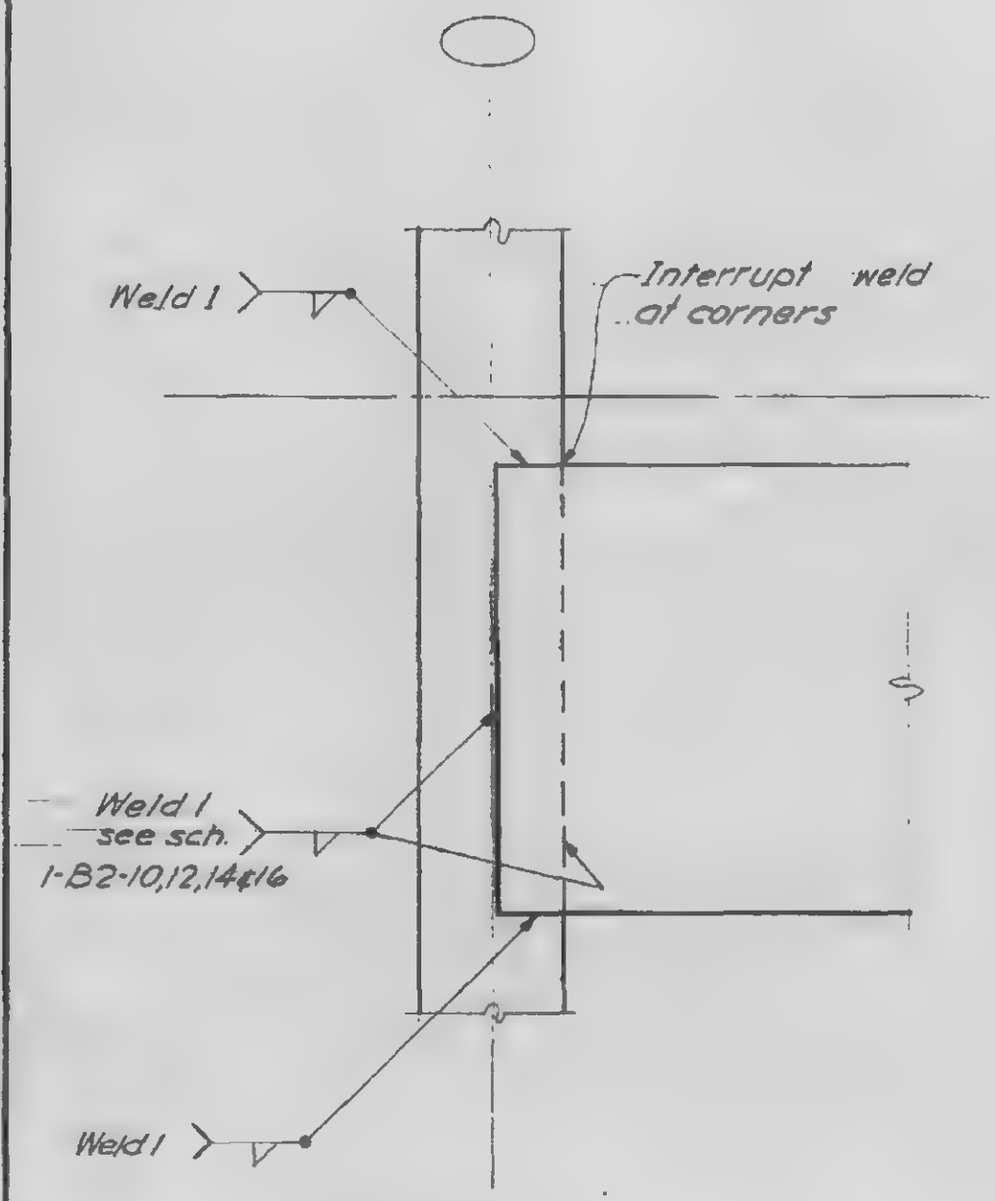

Detail 1

Detail 2 opp. hand

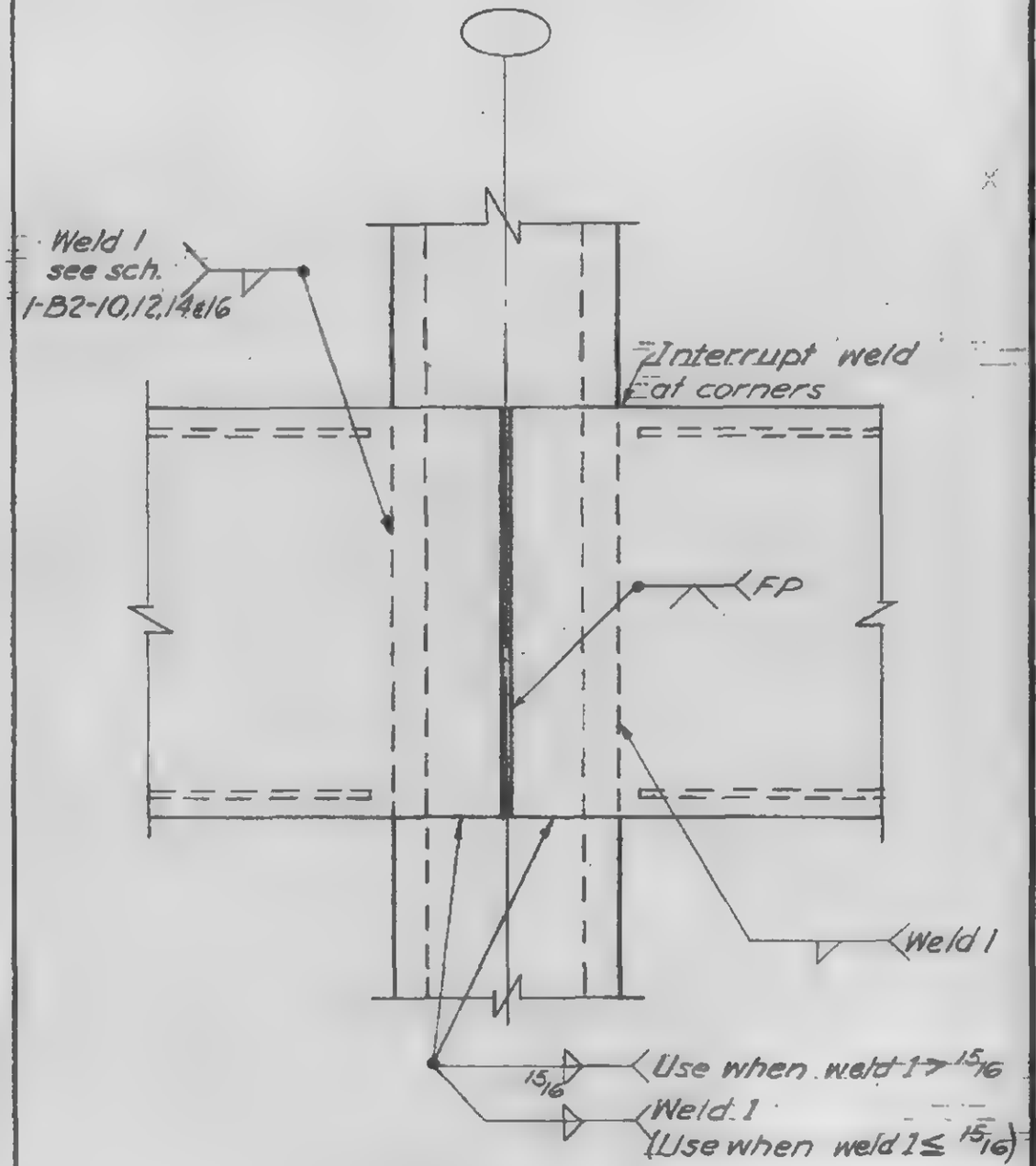

Detail 3

LICENSED PROFESSIONAL ENGINEER
LESLIE E. ROBERTSON
No. 34360
UNIVERSITY OF THE STATE OF NEW YORK

1-B2-69

WORTHINGTON, SKILLING, HELLE & JACKSON — Civil & Structural Engineers

PROJECT THE WORLD TRADE CENTER | TITLE EXT. WALL TO EL. 363'-DETAILS 4, 5 & 6 | DATE 3-31-67

REVISIONS

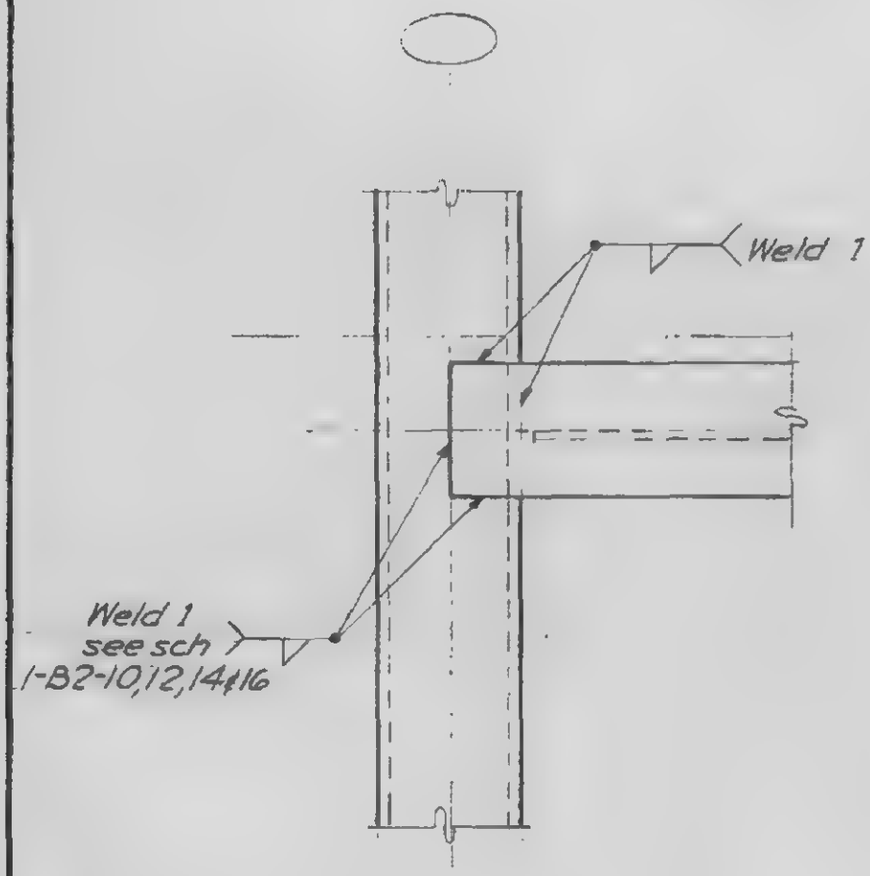

Detail 4
Detail 5 opp. hand

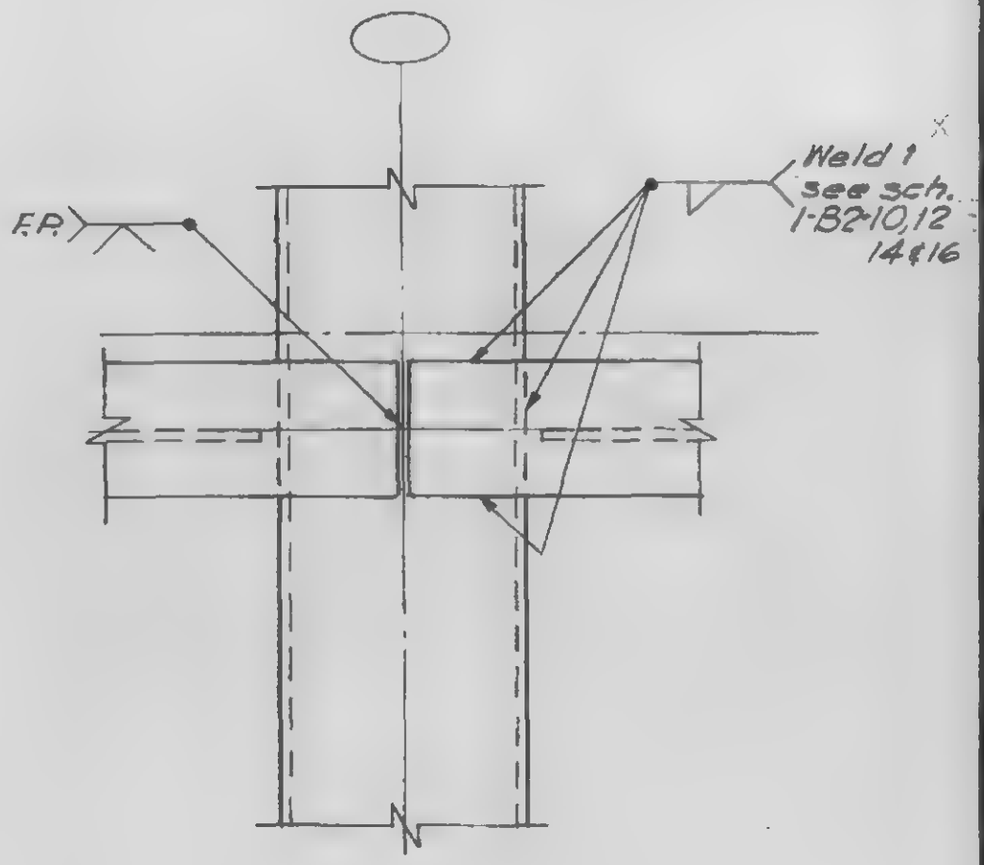

Detail 6

LICENSED PROFESSIONAL ENGINEER
LESLIE E. ROBERTSON
No. 34360
UNIVERSITY OF THE STATE OF N.Y.

1-B2-70

WORTHINGTON, SKILLING, HELLE & JACKSON — Civil & Structural Engineers

PROJECT THE WORLD TRADE CENTER | TITLE EXT. WALL TO EL. 363'-DETAILS 7, 8, 9 & 10 | DATE 3-31-67

REVISIONS

4-24-67

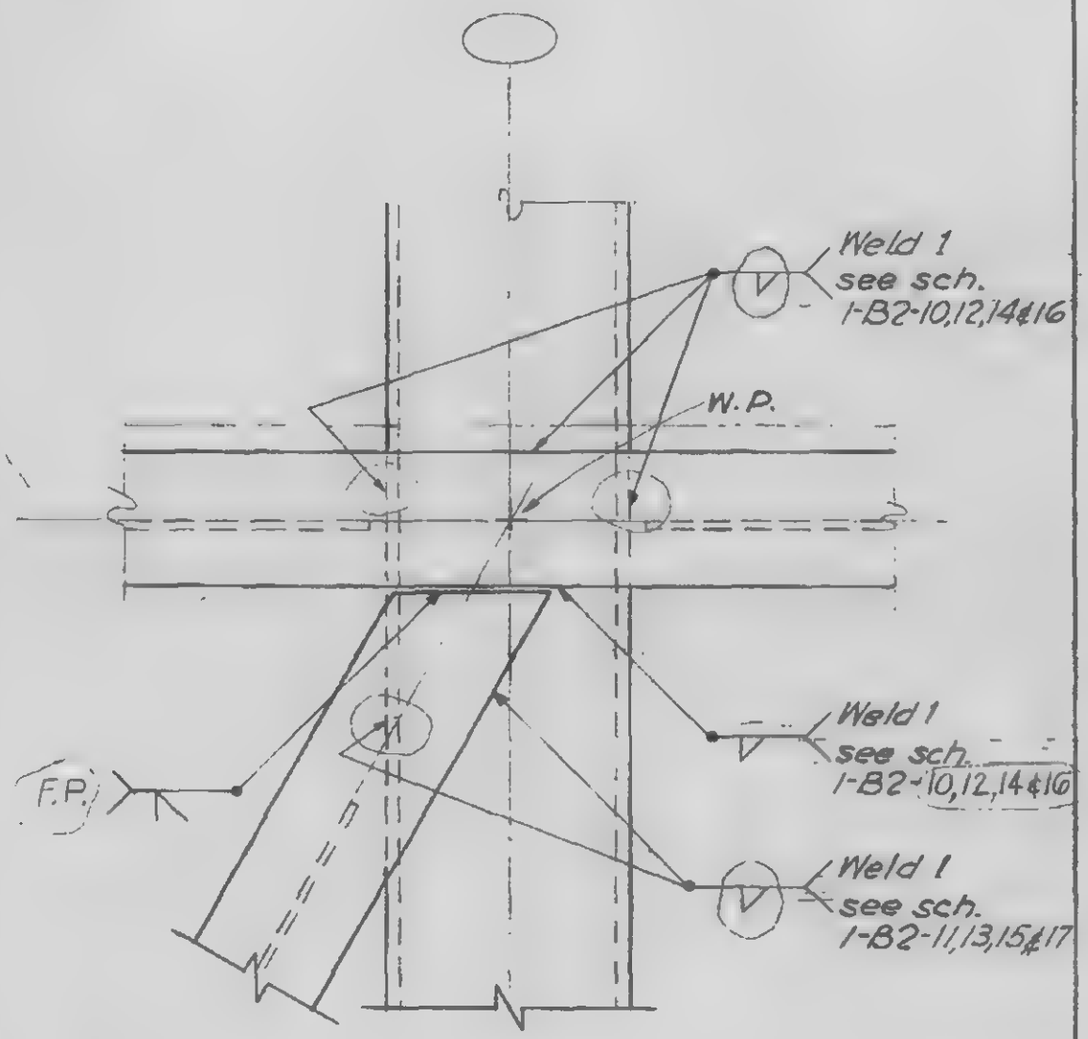

Detail 7
Detail 8 opp. hand

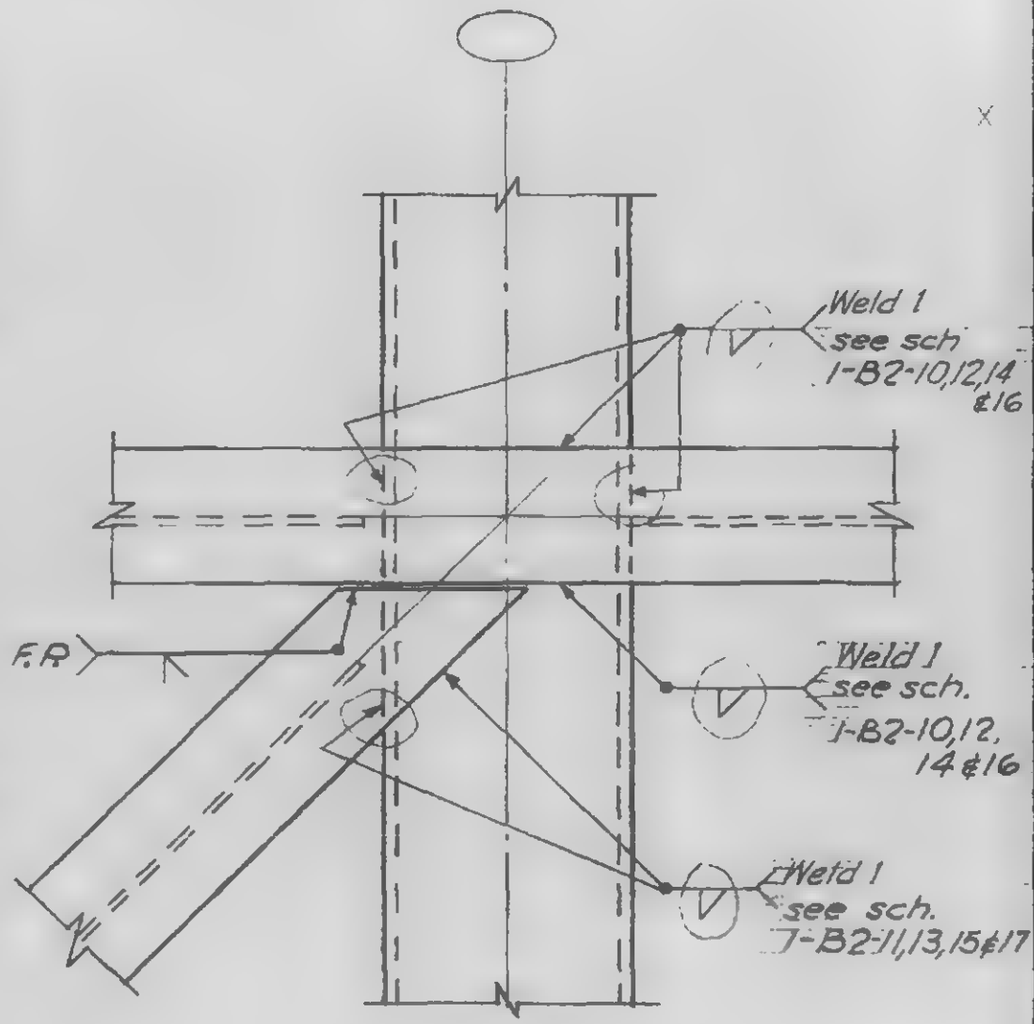

Detail 9
Detail 10 opp. hand

LICENSED PROFESSIONAL ENGINEER
LESLIE E. ROBERTSON
No. 34360
UNIVERSITY OF THE STATE OF NEW YORK

1-B2-71

WORTHINGTON, SKILLING, HELLE & JACKSON — Civil & Structural Engineers

PROJECT THE WORLD TRADE CENTER | TITLE EXT. WALL TO EL. 363'-DETAILS 11,12,13&14 | DATE 3-31-67

REVISIONS

4-24-67

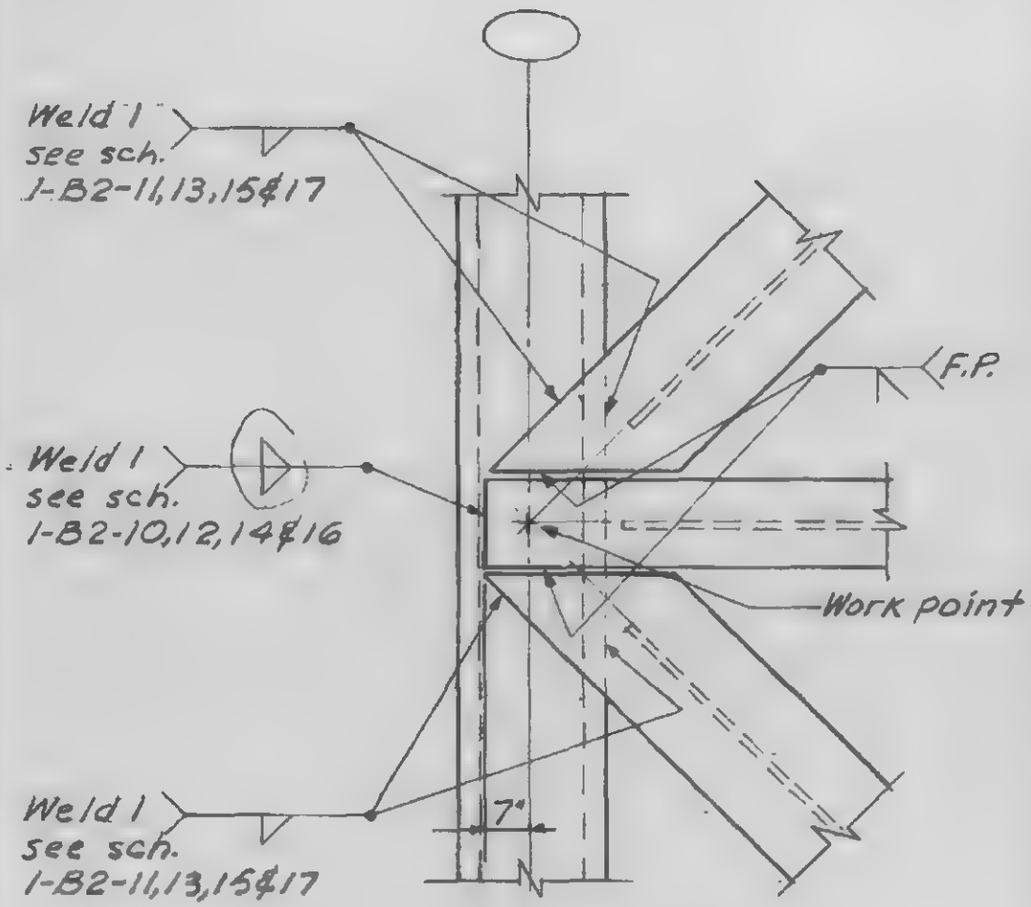

Detail 11
Detail 12 opp. hand

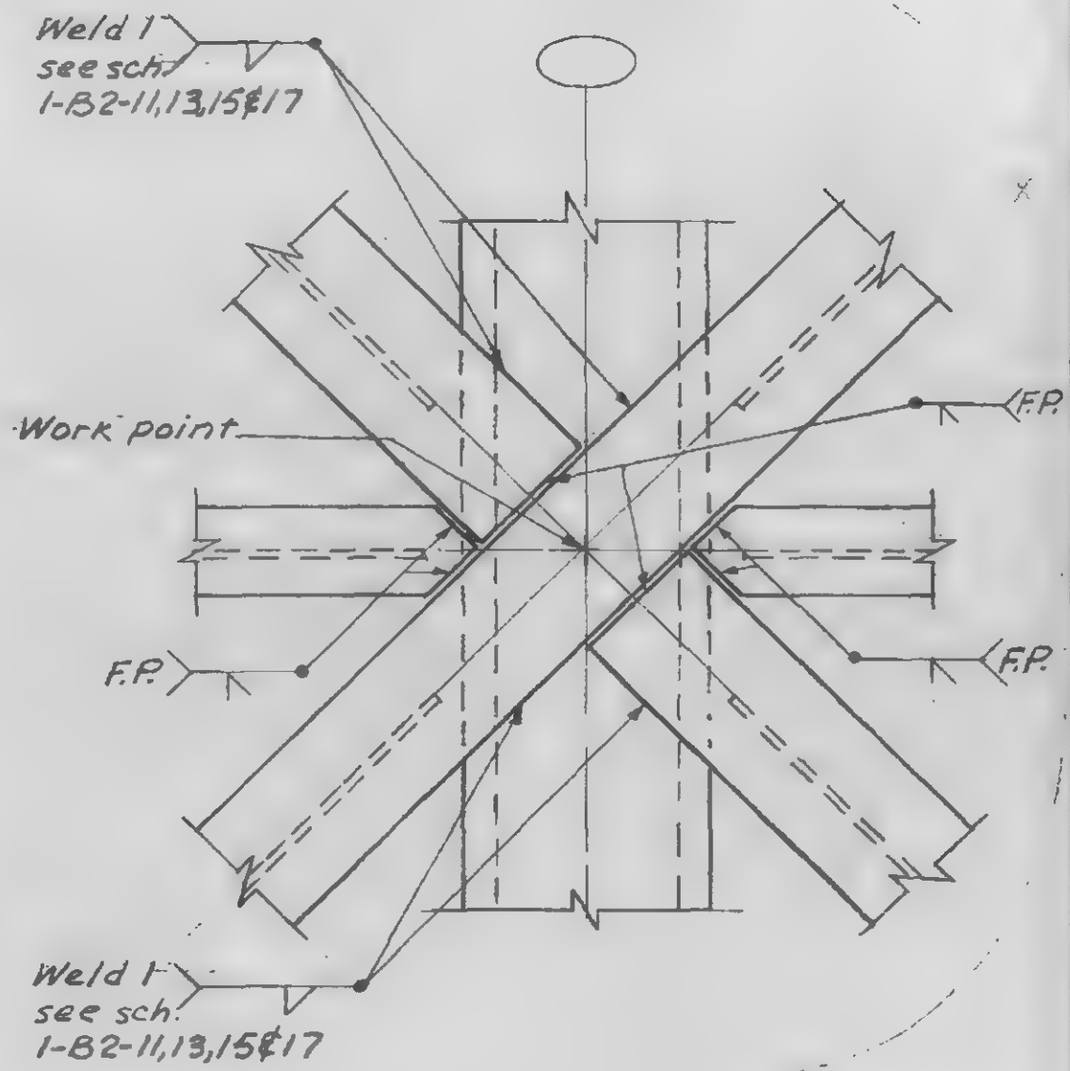

Detail 13
Detail 14 opp hand

LICENSED PROFESSIONAL ENGINEER
LESLIE E. ROBERTSON
NO. 34560
UNIVERSITY OF THE STATE OF N.Y.

1-B2-72

WORTHINGTON, SKILLING, HELLE & JACKSON — Civil & Structural Engineers

PROJECT THE WORLD TRADE CENTER | TITLE EXT. WALL TO EL. 363' - DETAILS 15, 16, 17 & 18 | DATE 3-31-67

REVISIONS

4-24-67

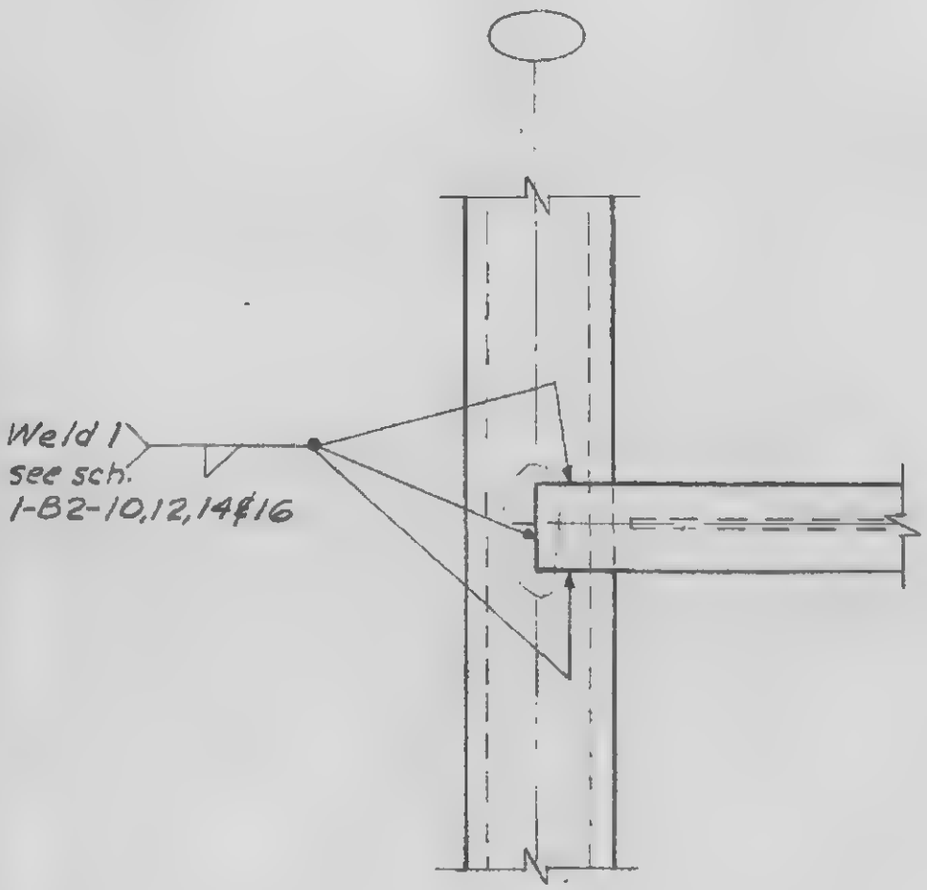

Detail 15
Detail 16 opp. hand

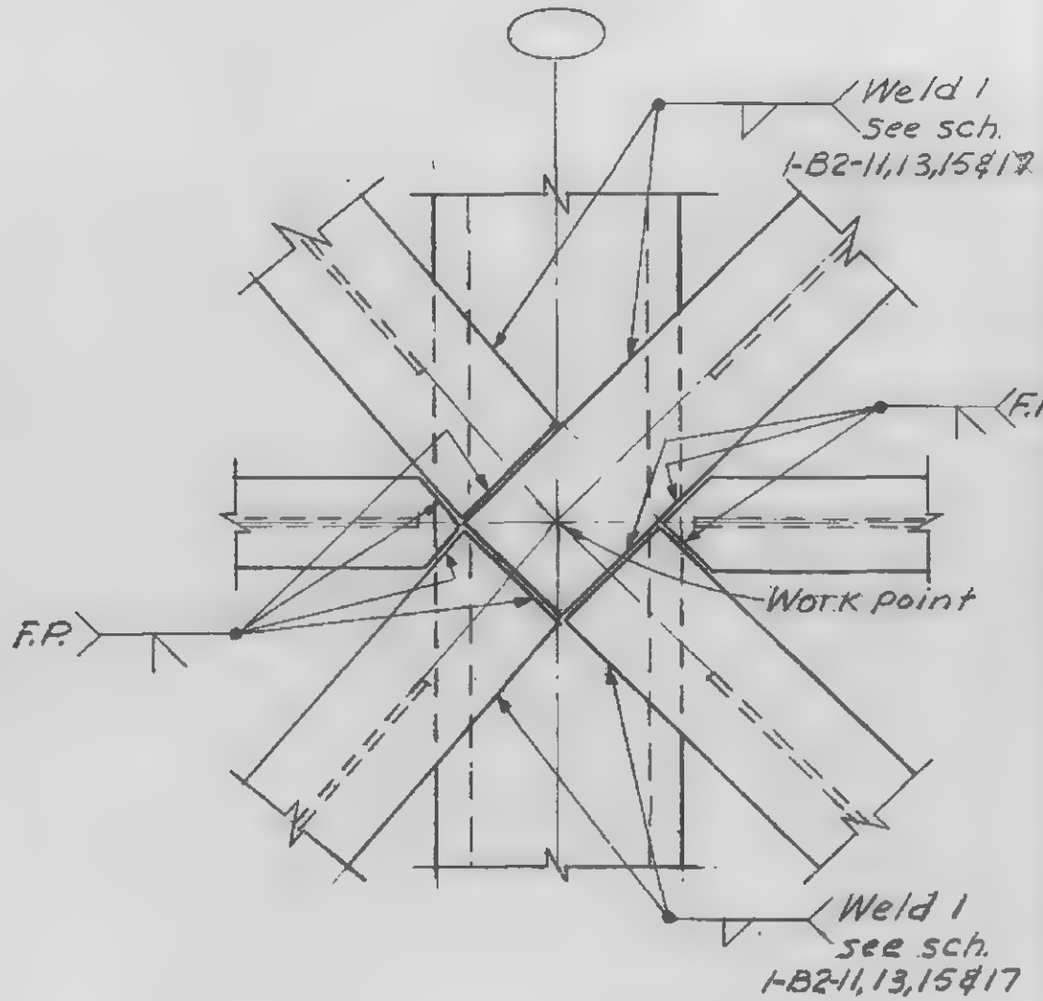

Detail 17
Detail 18 opp. hand

LICENSED PROFESSIONAL ENGINEER
LESLIE E. ROBERTSON
No. 34360
UNIVERSITY OF THE STATE OF NEW YORK

1-B2-73

WORTHINGTON, SKILLING, HELLE & JACKSON — Civil & Structural Engineers

PROJECT THE WORLD TRADE CENTER | TITLE EXT. WALL TO EL. 363 DETAILS 19 & 20 | DATE 3-31-67

REVISIONS

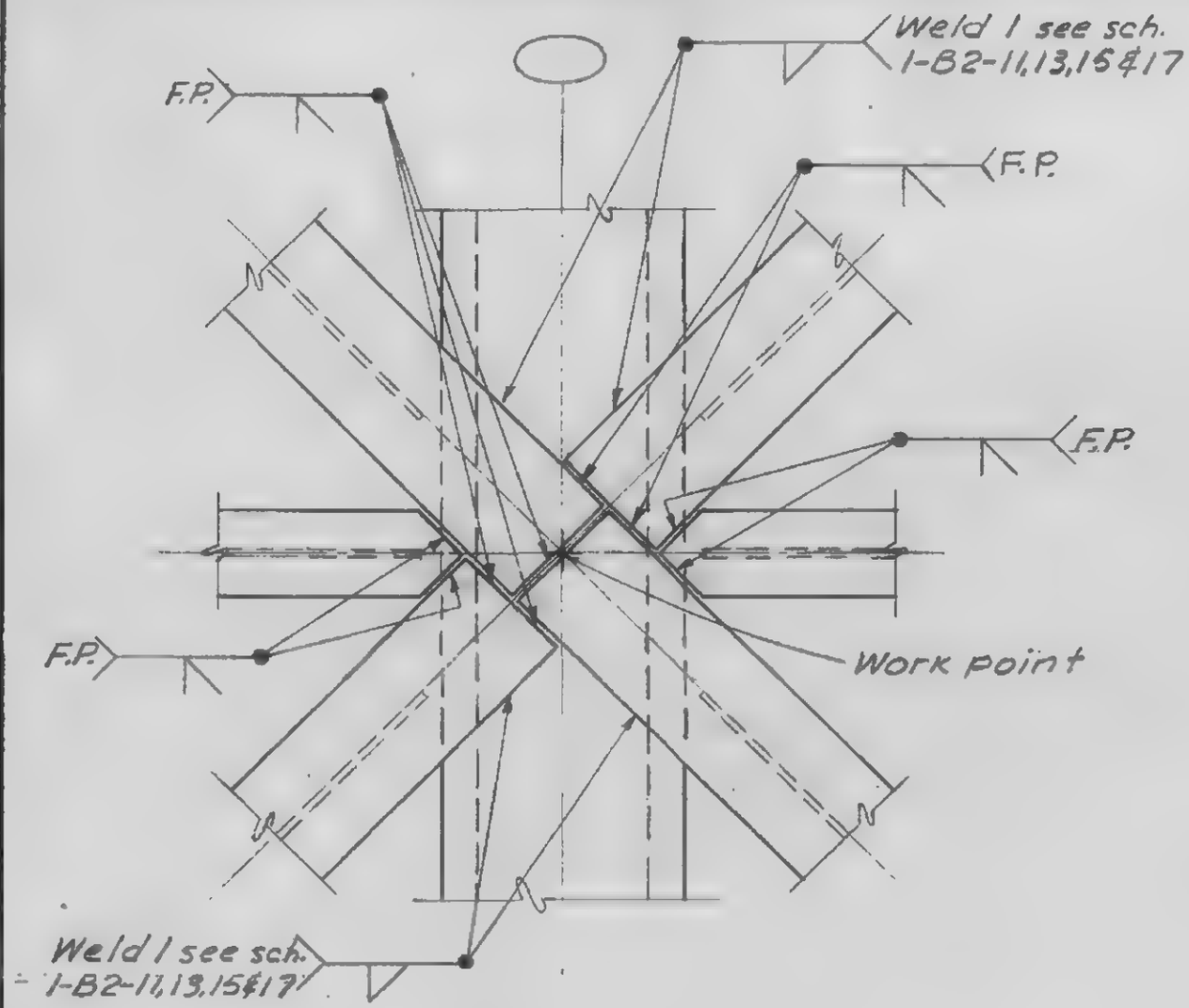

Detail 19

Detail 20 opp. hand

LICENSED PROFESSIONAL ENGINEER
LESLIE E. ROBERTSON
No. 34360
UNIVERSITY OF THE STATE OF NEW YORK

1-B2-74

WORTHINGTON, SKILLING, HELLE & JACKSON — Civil & Structural Engineers

PROJECT THE WORLD TRADE CENTER | TITLE EXT. WALL TO EL.363'-DETAILS 21, 22 & 23 | DATE 3-31-67

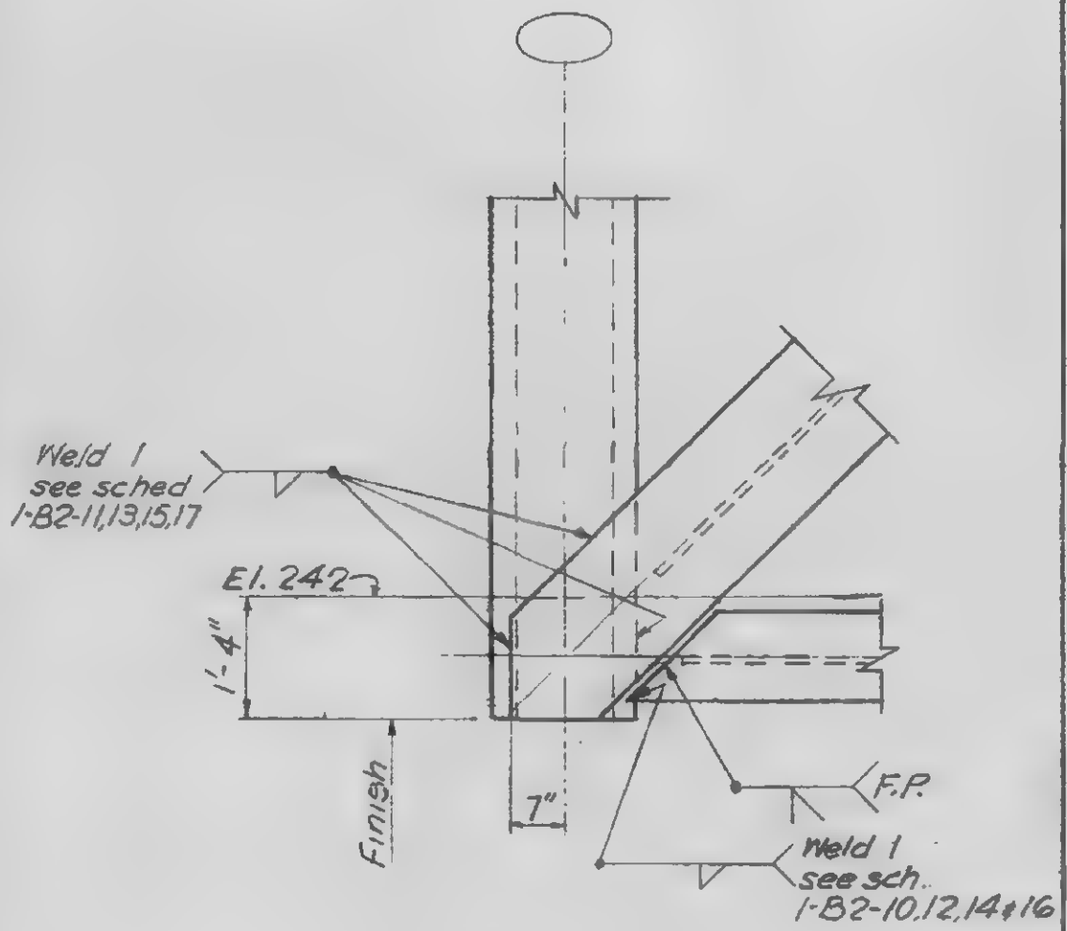

Detail 21

Detail 22 opp. hand

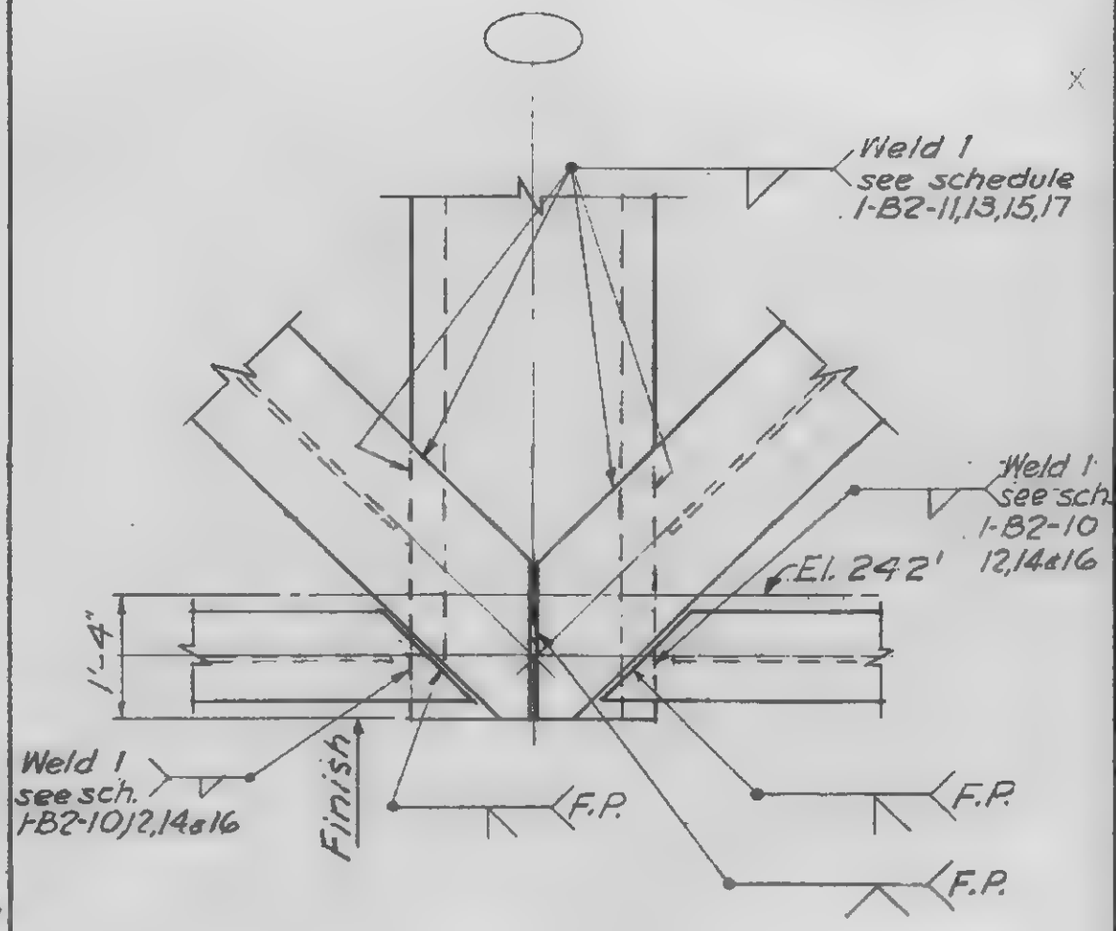

Detail 23

LICENSED PROFESSIONAL ENGINEER
LESLIE E. ROBERTSON
No. 34360
UNIVERSITY OF THE STATE OF NEW YORK

1-B2-75

WORTHINGTON, SKILLING, HELLE & JACKSON — Civil & Structural Engineers

PROJECT THE WORLD TRADE CENTER | TITLE EXT. WALL TO EL. 363'-DETAILS 24.25,26&27 | DATE 3-31-67

REVISIONS

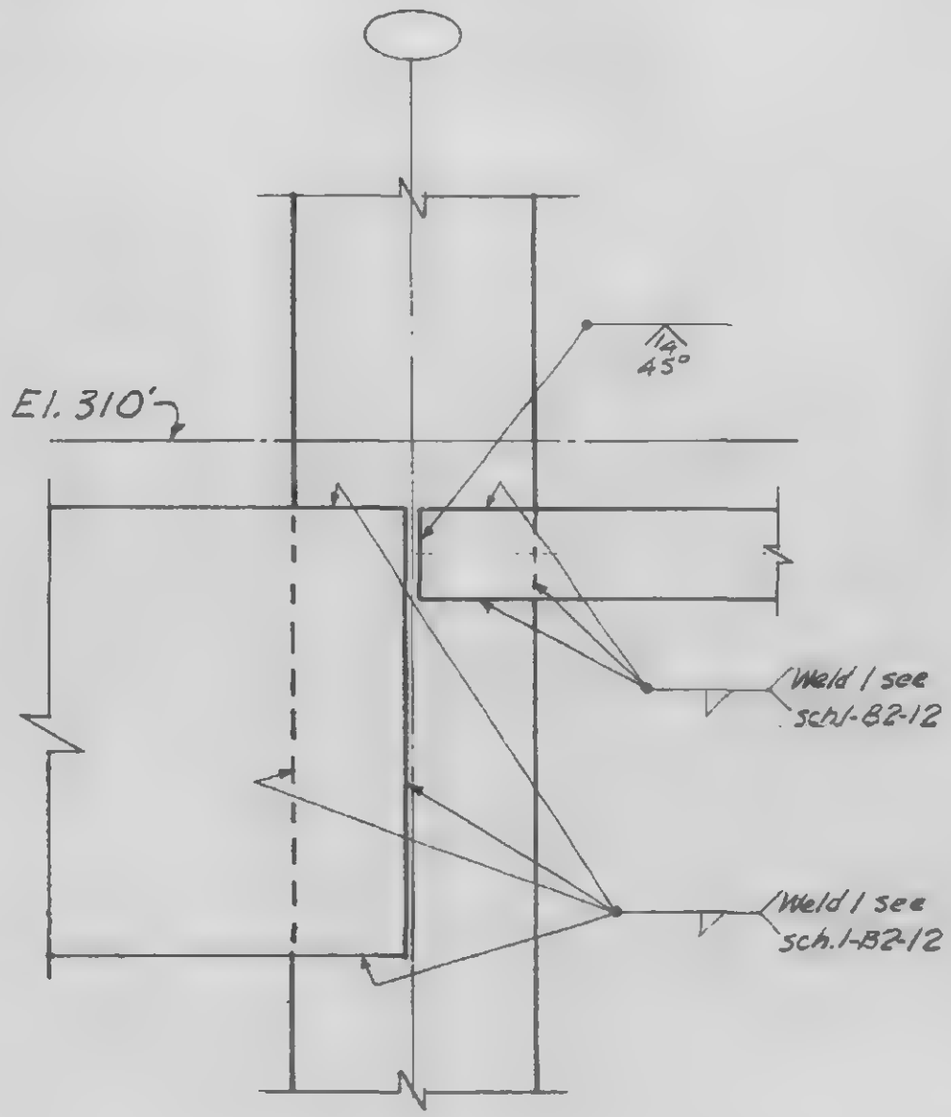

Detail 24
Detail 25 opp. hand

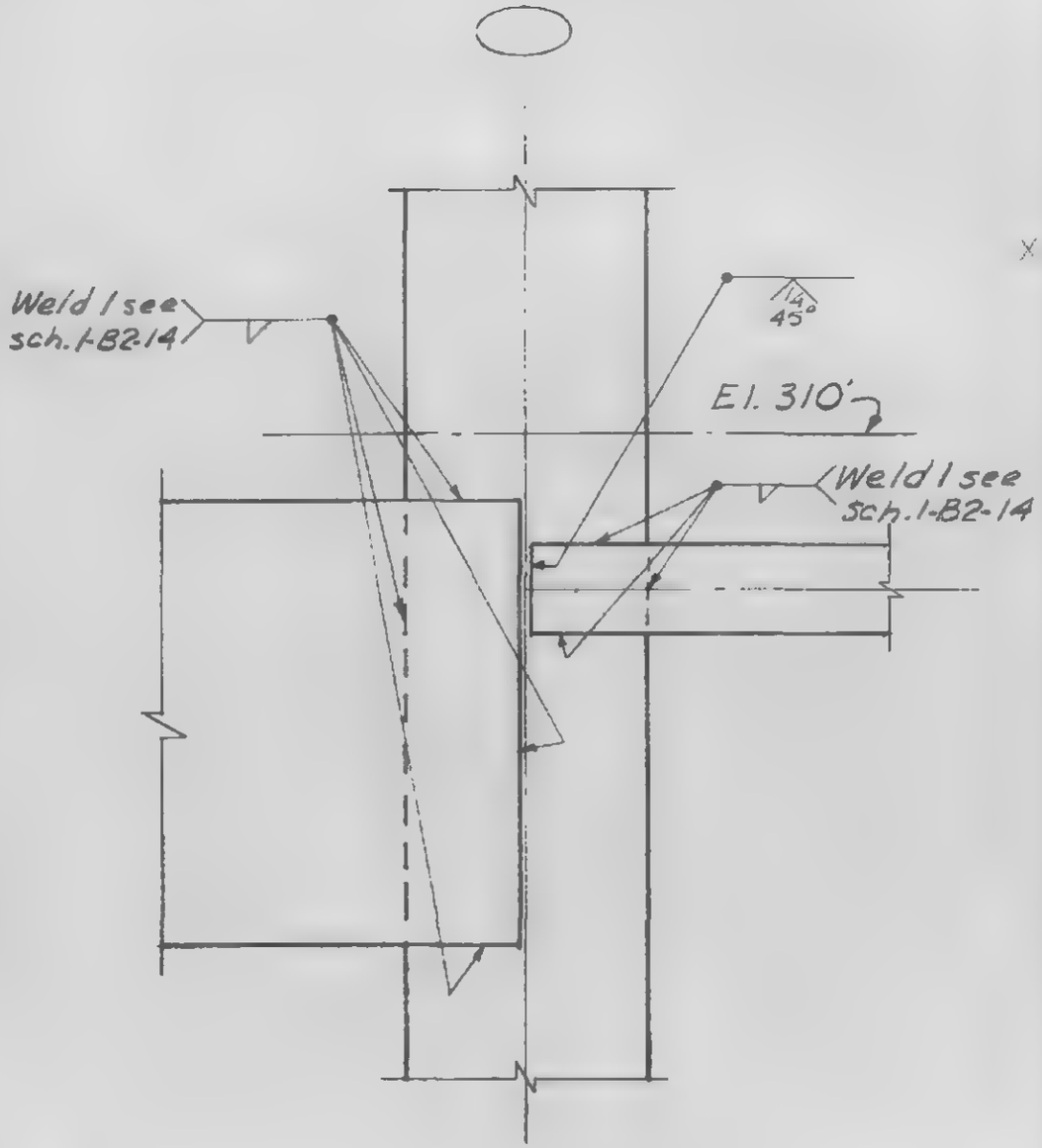

Detail 26
Detail 27 opp. hand

LESLIE E. ROBERTSON — No. 34360 — UNIVERSITY OF THE STATE OF NEW YORK

1-B2-76

WORTHINGTON, SKILLING, HELLE & JACKSON — Civil & Structural Engineers

PROJECT THE WORLD TRADE CENTER | TITLE EXT. WALL TO EL. 363'- DETAILS 28, 29, 30 & 31 | DATE 3-31-67

REVISIONS

4-24-67

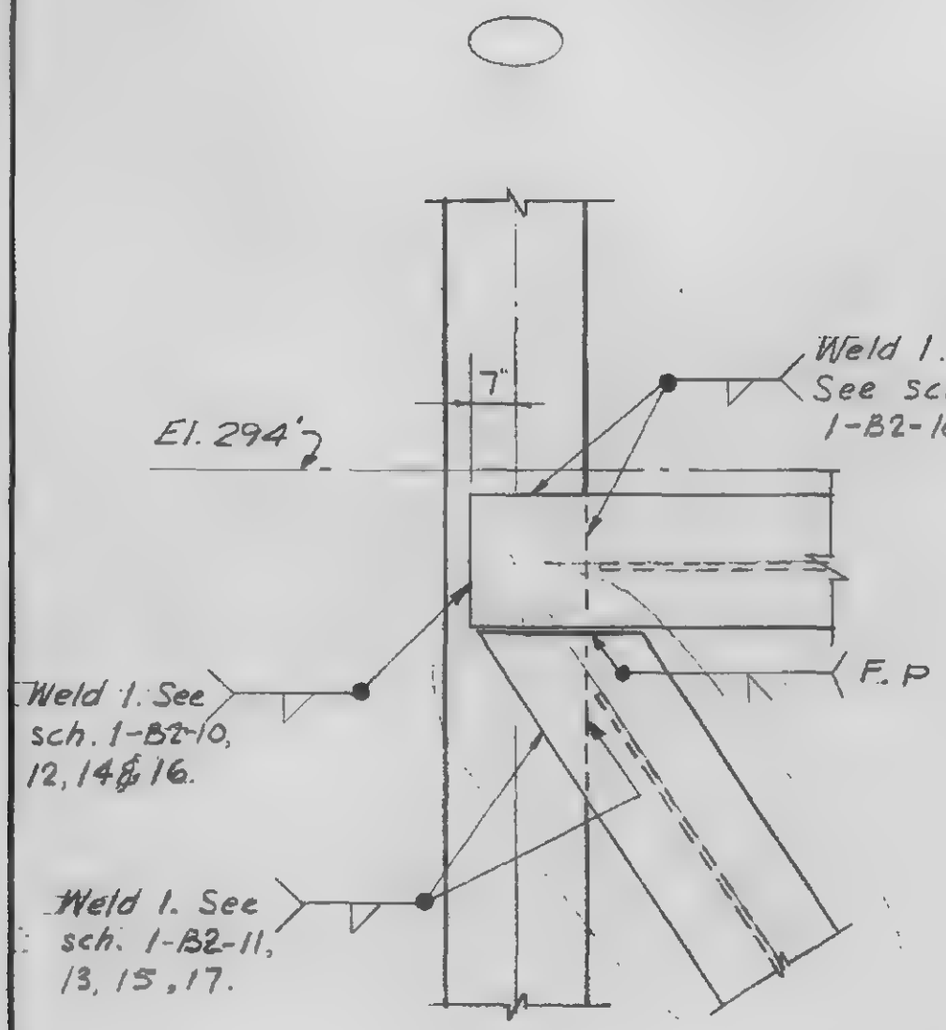

Detail 28
Detail 29 opp. hand

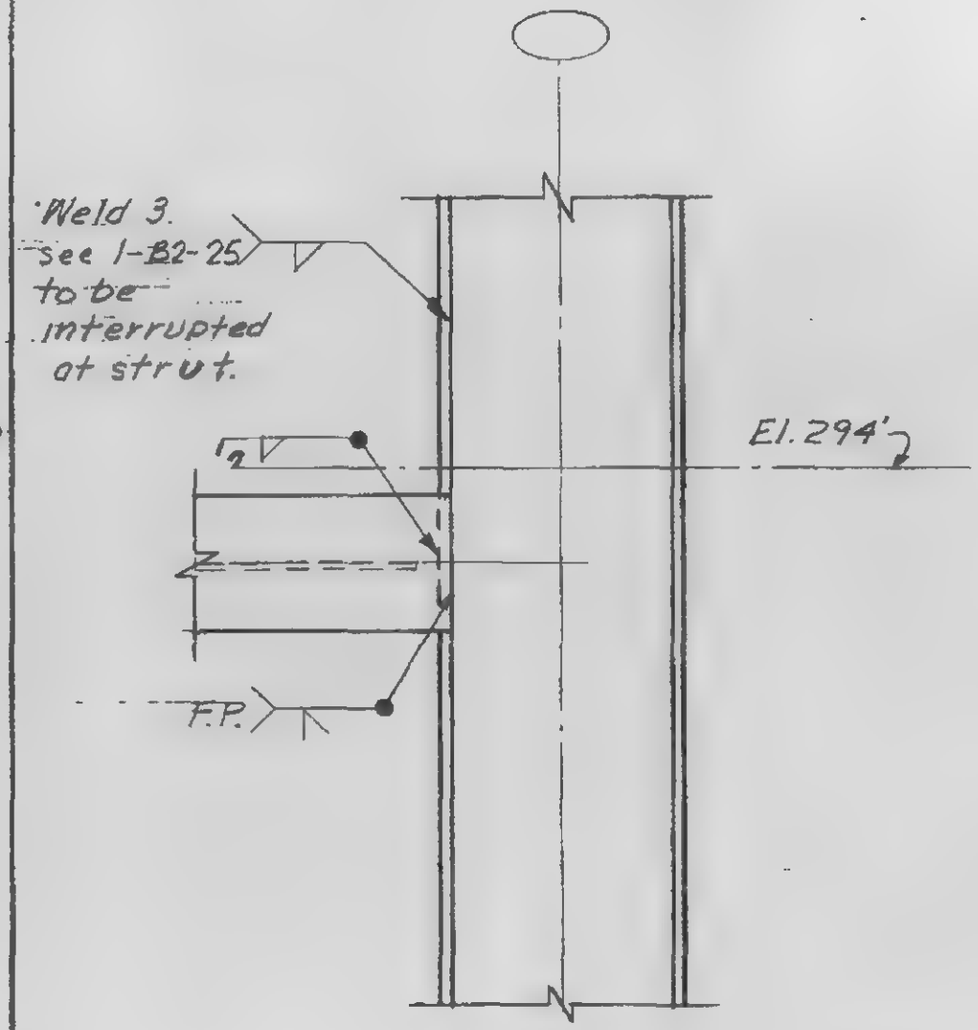

Detail 30
Detail 31 opp. hand

LICENSED PROFESSIONAL ENGINEER
LESLIE E. ROBERTSON
No. 34360
UNIVERSITY OF THE STATE OF NE. TEXAS

1-B2-77

WORTHINGTON, SKILLING, HELLE & JACKSON — Civil & Structural Engineers

PROJECT: THE WORLD TRADE CENTER | TITLE: EXT. WALL TO EL. 363'-DETAILS 32, 33, 34 & 35 | DATE: 3-31-67

REVISIONS

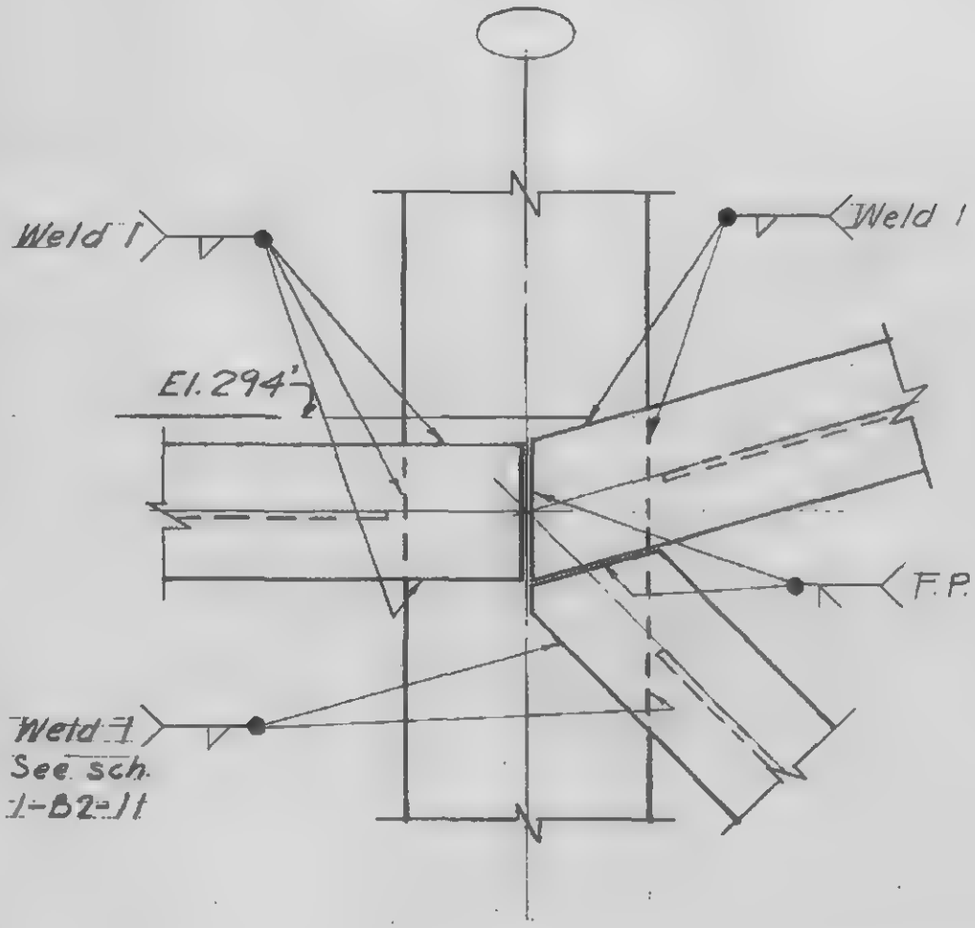

Detail 32
Detail 33 opp. hand

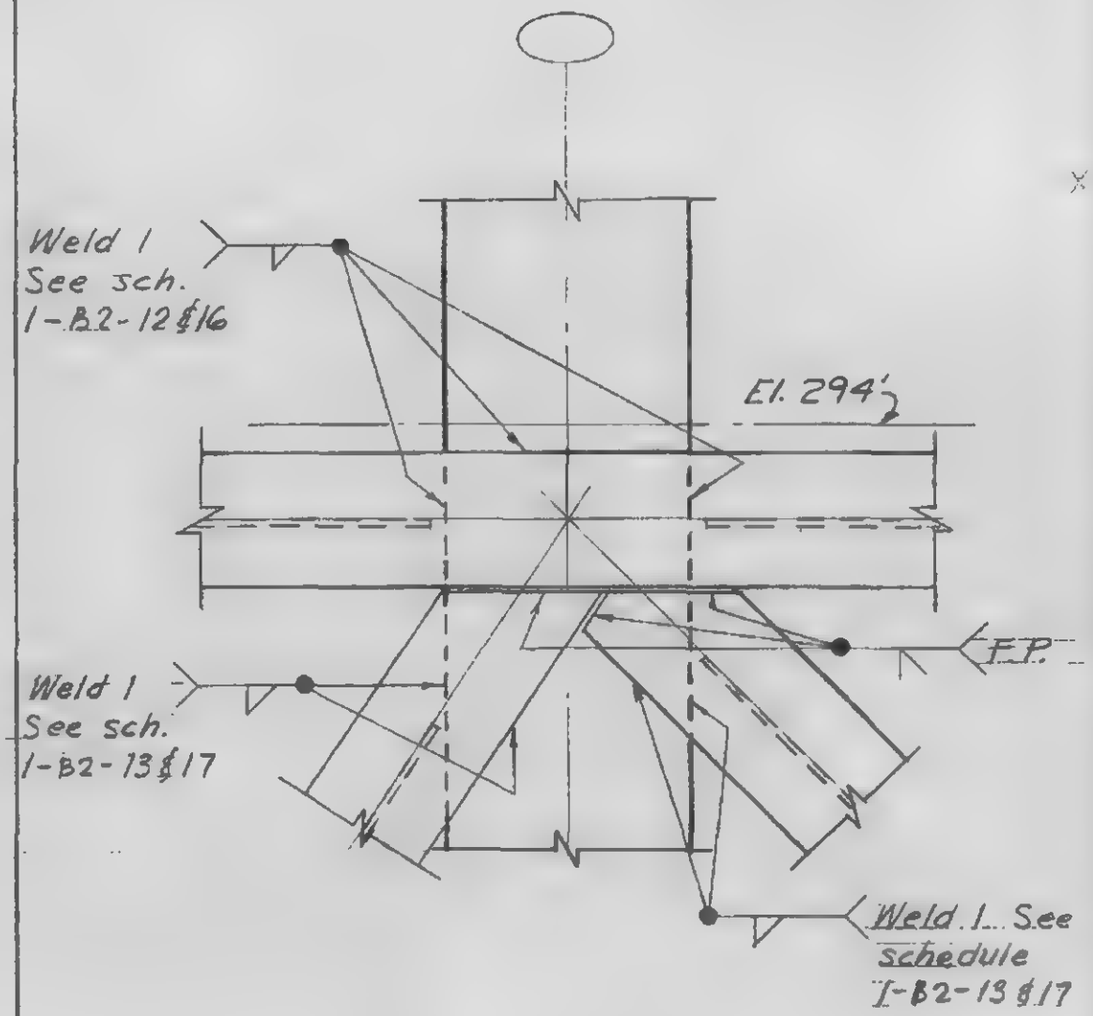

Detail 34
Detail 35 opp. hand

LICENSED PROFESSIONAL ENGINEER
LESLIE E. ROBERTSON
No. 34360
UNIVERSITY OF THE STATE OF NEW YORK

1-B2-78

WORTHINGTON, SKILLING, HELLE & JACKSON — Civil & Structural Engineers

PROJECT THE WORLD TRADE CENTER | TITLE EXT. WALL TO EL. 363'- DETAIL 36 & 37 | DATE 3-31-67

REVISIONS

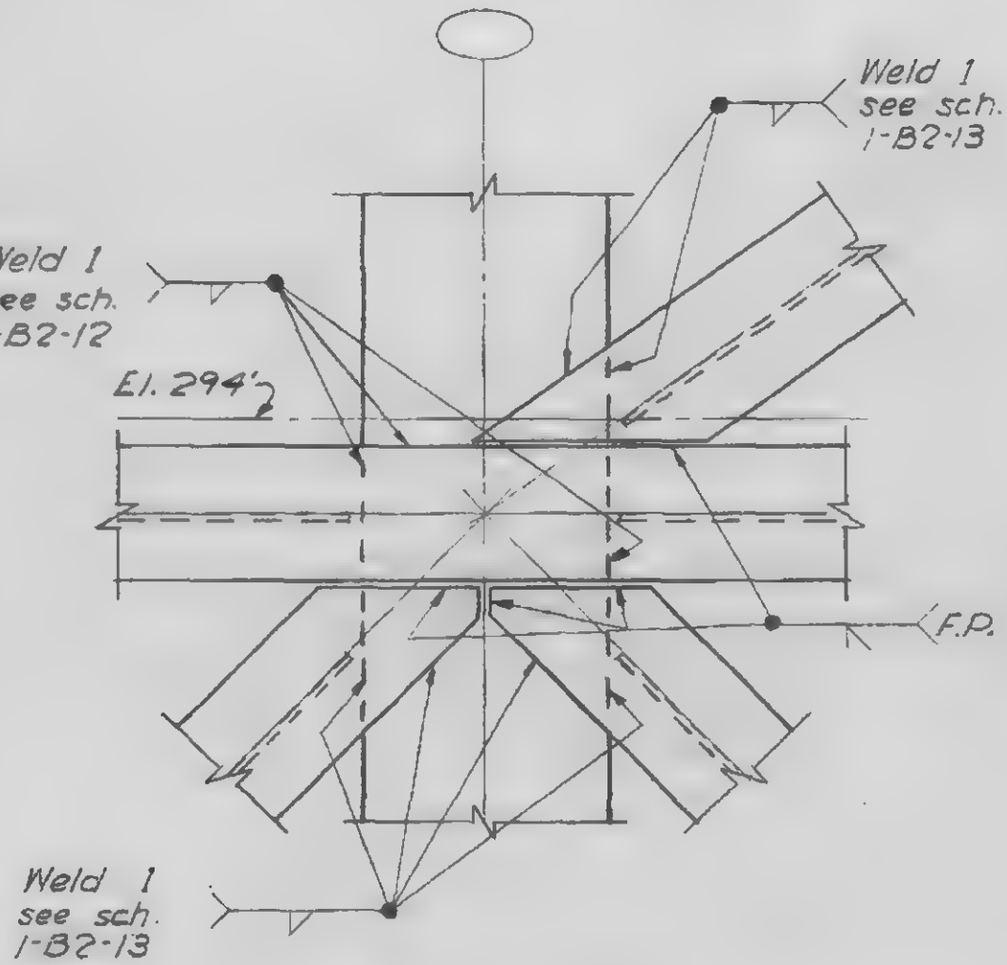

Detail 36

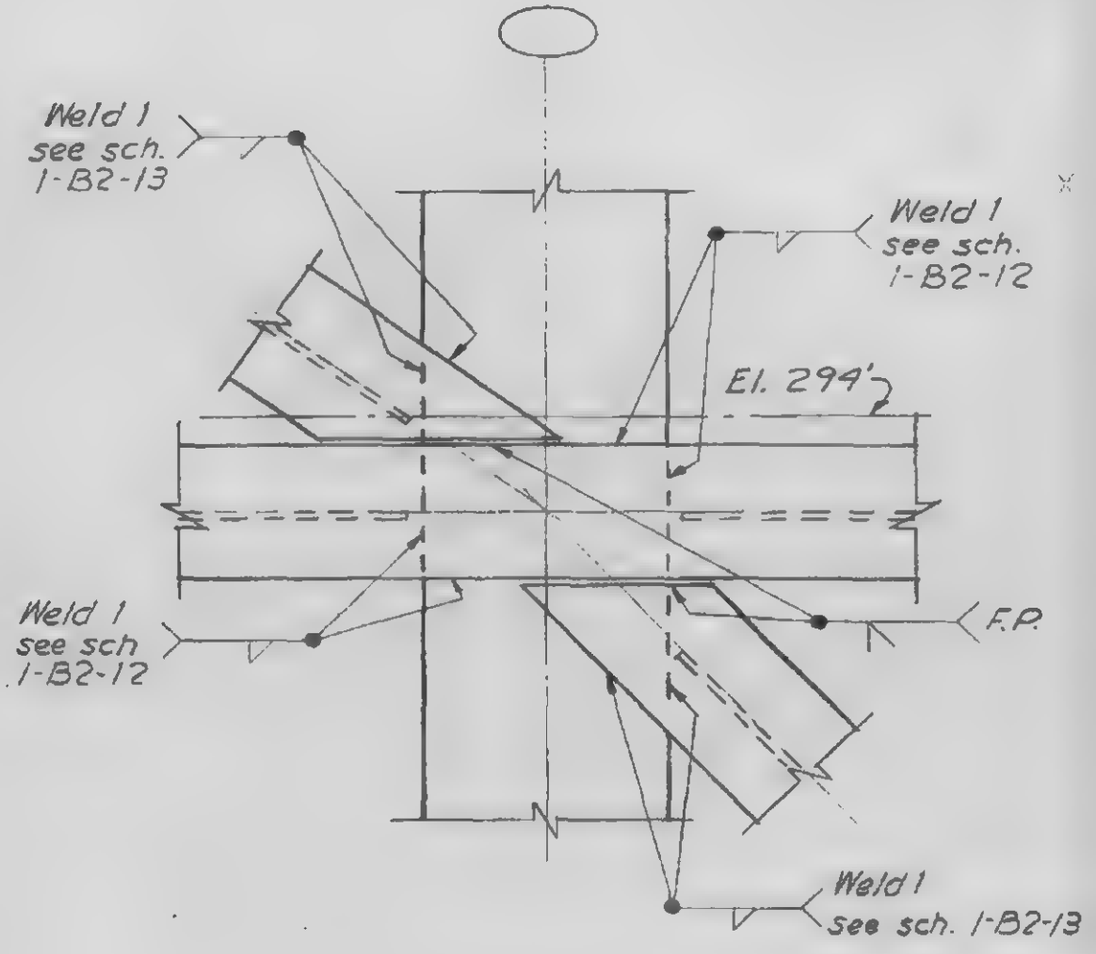

Detail 37

LICENSED PROFESSIONAL ENGINEER
LESLIE E. ROBERTSON
No. 34360
UNIVERSITY OF THE STATE OF NEW YORK

1-B2-79

WORTHINGTON, SKILLING, HELLE & JACKSON — Civil & Structural Engineers

PROJECT THE WORLD TRADE CENTER | TITLE EXT. WALL TO EL. 363'- DETAILS 38, 39, 40 & 41 | DATE 3-31-67

REVISIONS

4-24-67

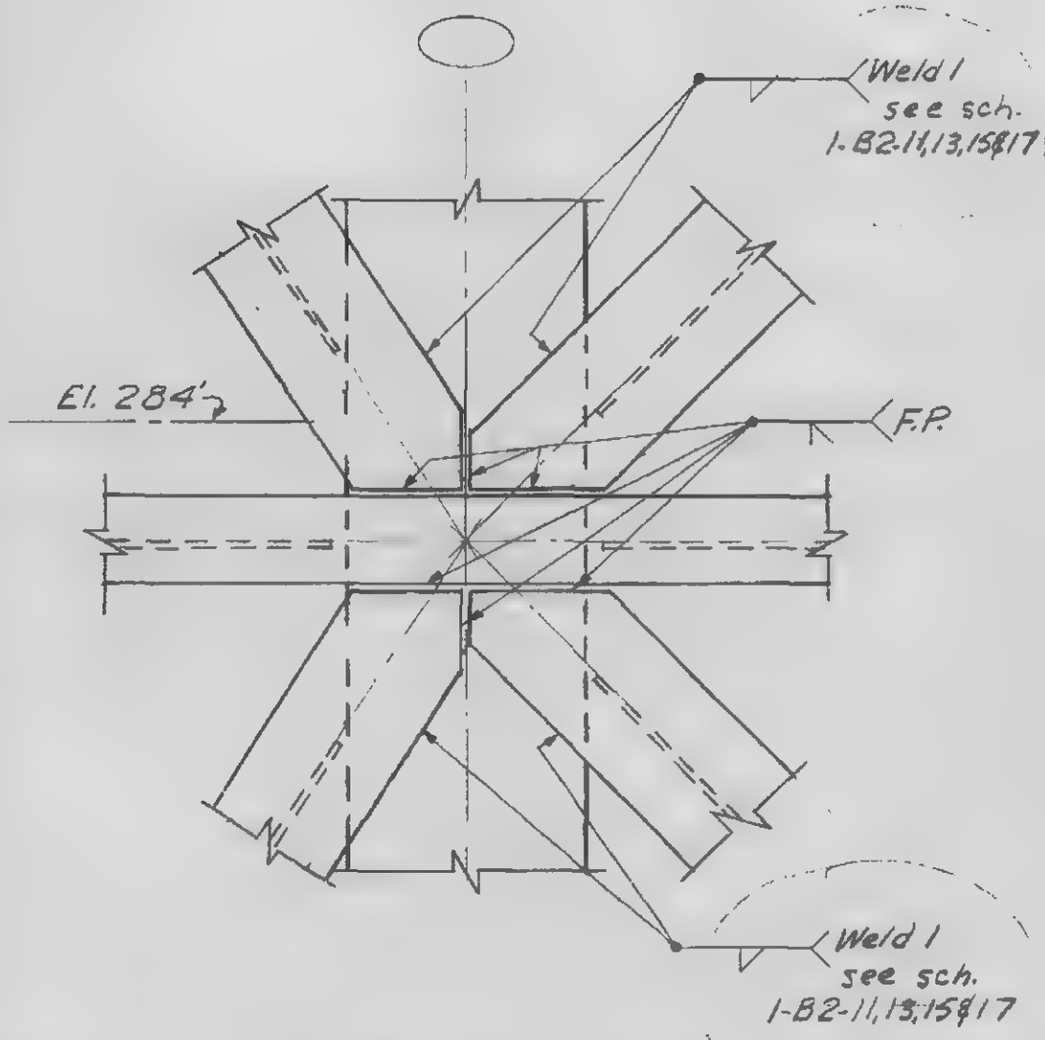

Detail 38
Detail 39 opp. hand

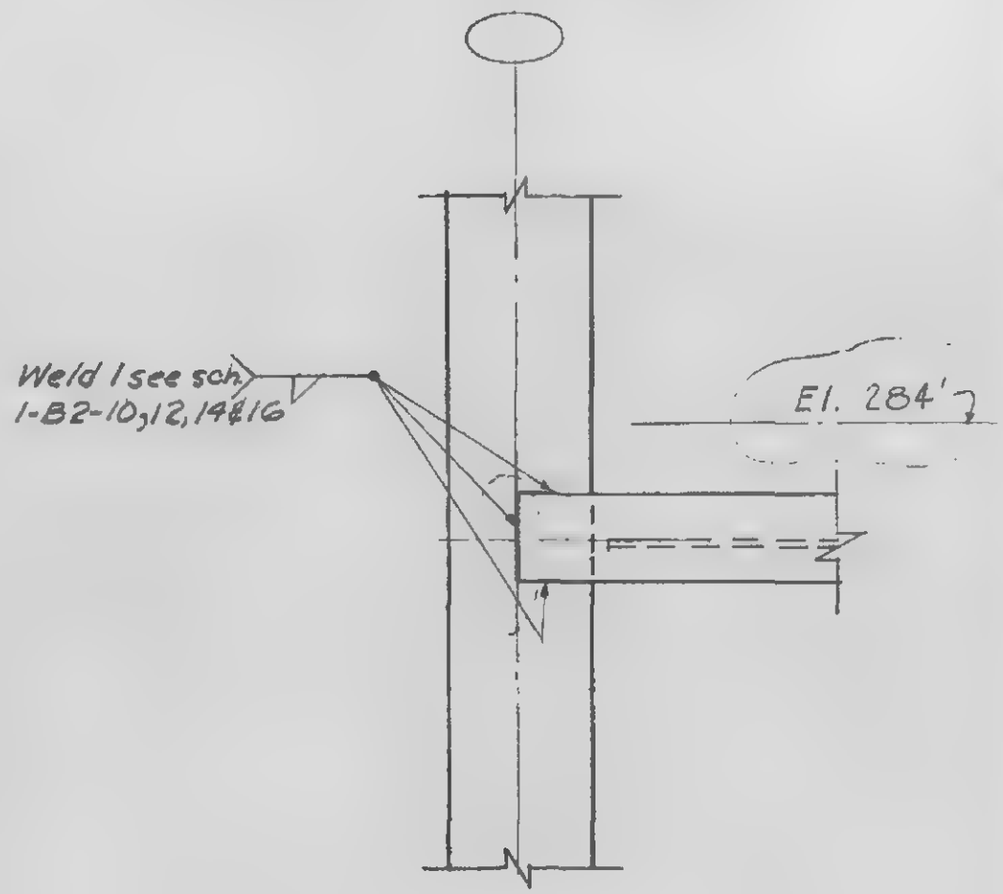

Detail 40
Detail 41 opp. hand

LICENSED PROFESSIONAL ENGINEER
LESLIE E. ROBERTSON
No. 34360
UNIVERSITY OF THE STATE OF NEW YORK

1-B2-80

WORTHINGTON, SKILLING, HELLE & JACKSON — Civil & Structural Engineers

PROJECT THE WORLD TRADE CENTER | TITLE EXT. WALL TO EL. 363 - DETAILS 42, 43 & 44 | DATE 3-31-67

REVISIONS

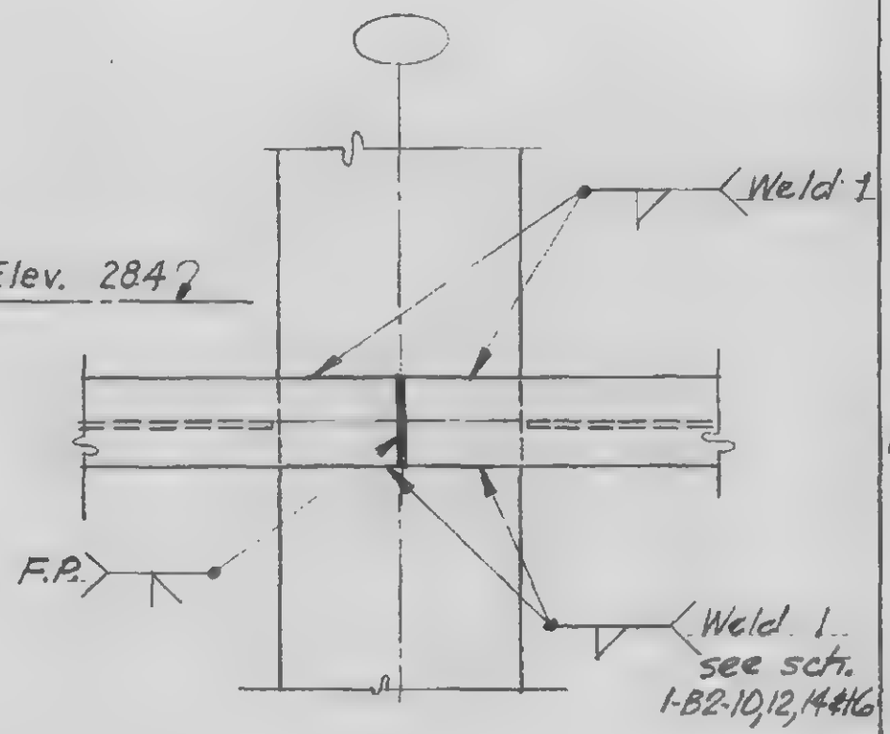

Detail 42

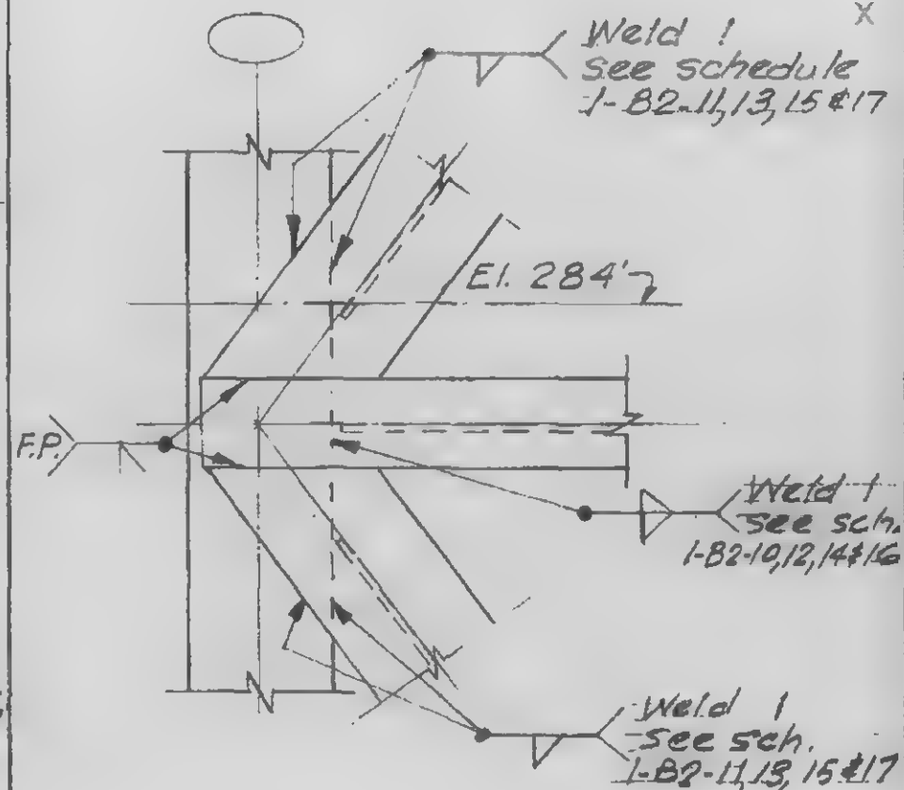

Detail 43

Detail 44 opp. hand

LICENSED PROFESSIONAL ENGINEER
LESLIE E. ROBERTSON
No. 34360
UNIVERSITY OF THE STATE OF NEW YORK

1-B2-81

WORTHINGTON, SKILLING, HELLE & JACKSON — Civil & Structural Engineers

PROJECT: THE WORLD TRADE CENTER | TITLE: EXT. WALL TO EL. 363'-DETAILS 45, 46 & 47 | DATE: 3-31-67

REVISIONS

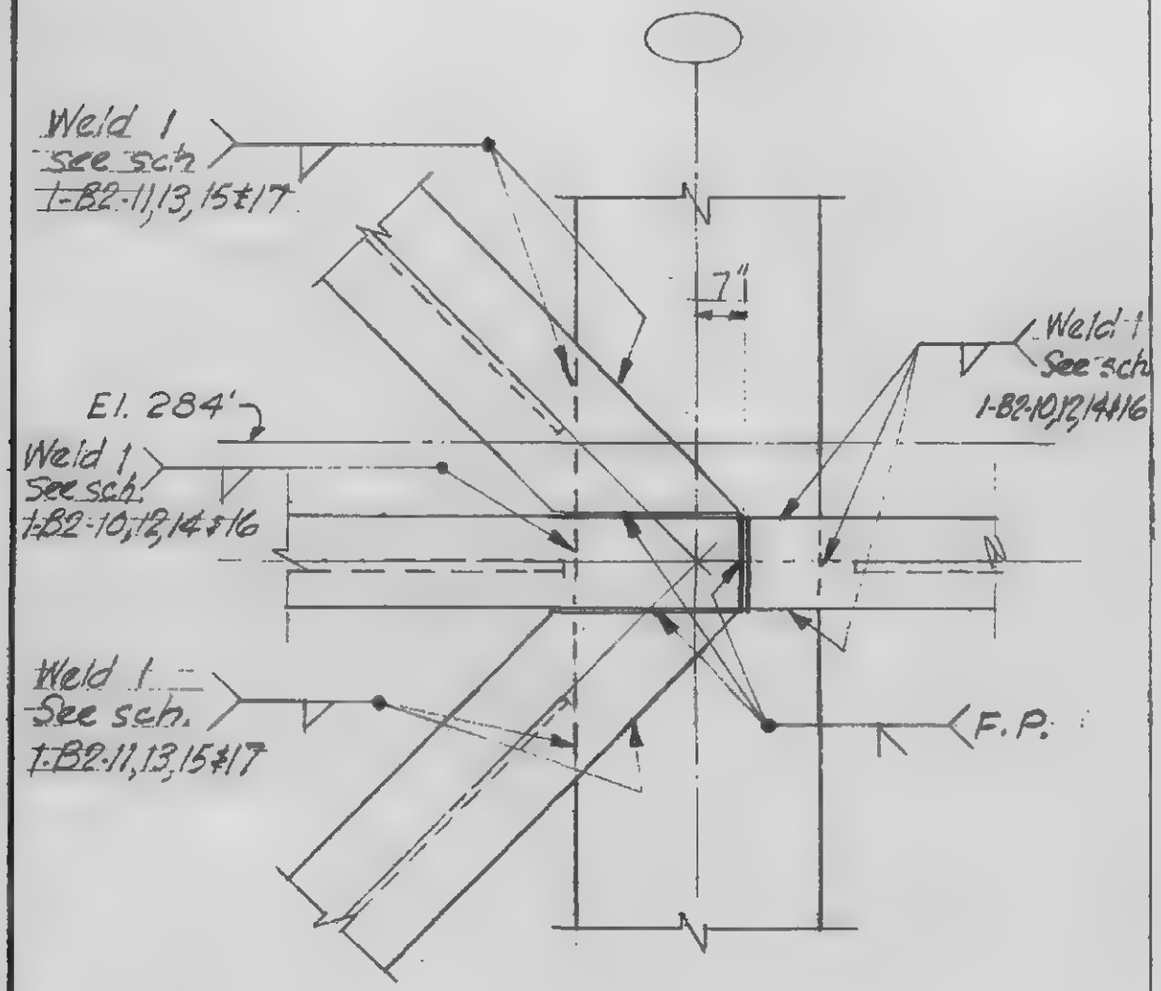

Detail 45
Detail 46 opp. hand

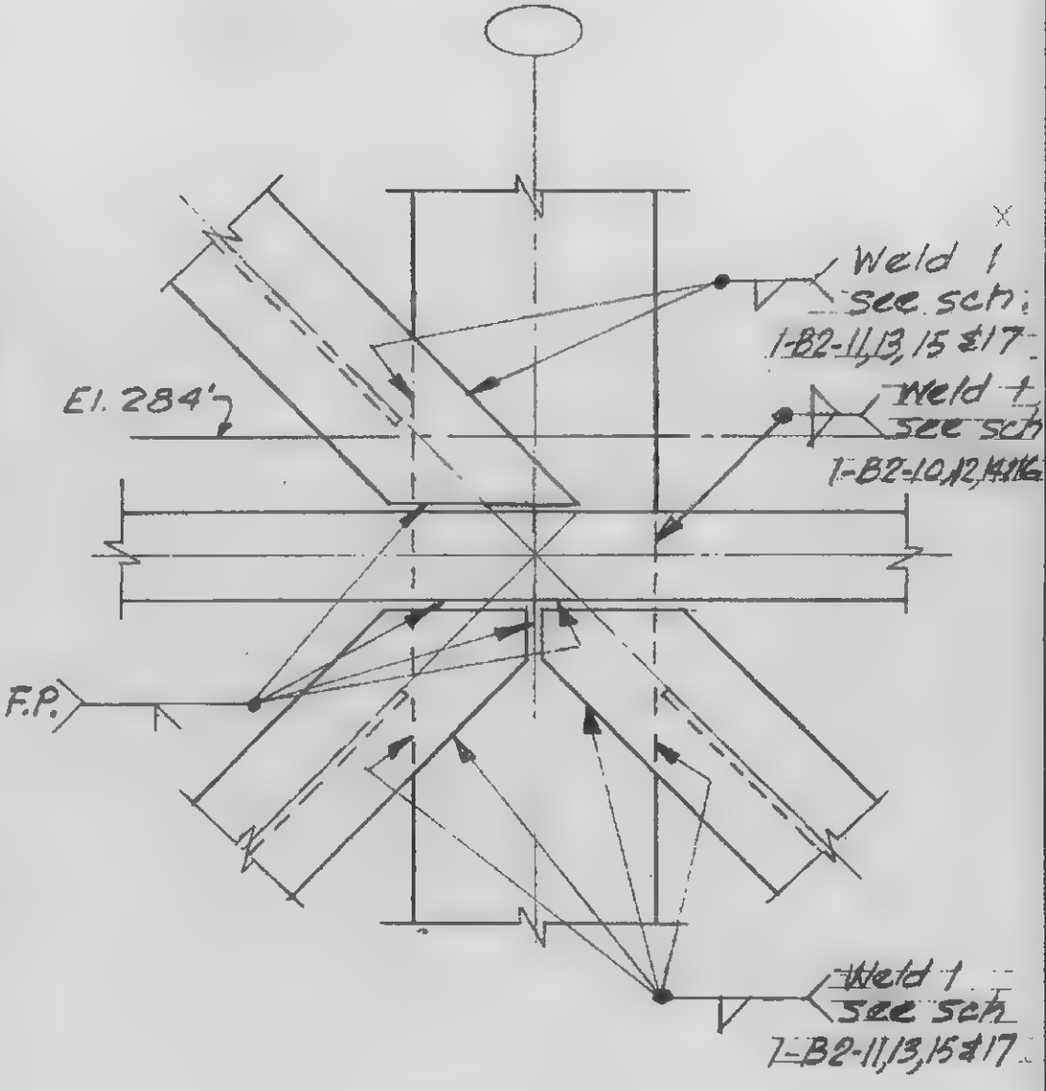

Detail 47

LICENSED PROFESSIONAL ENGINEER
LESLIE E. ROBERTSON
No. 34360
UNIVERSITY OF THE STATE OF NEW YORK

1-B2-82

WORTHINGTON, SKILLING, HELLE & JACKSON — Civil & Structural Engineers

PROJECT THE WORLD TRADE CENTER | TITLE EXT. WALL TO EL. 363' – DETAIL 48 & 49 | DATE 3-31-67

REVISIONS

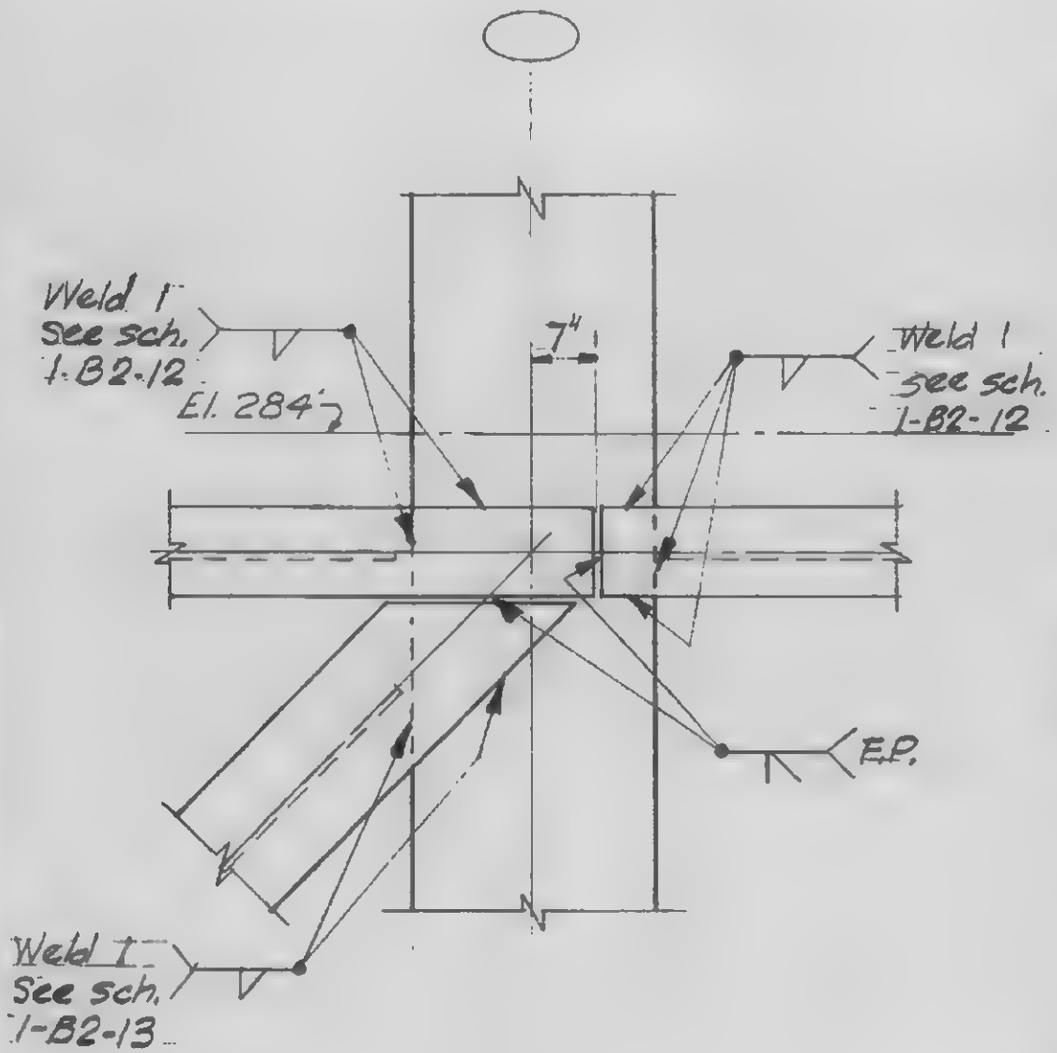

Detail 48

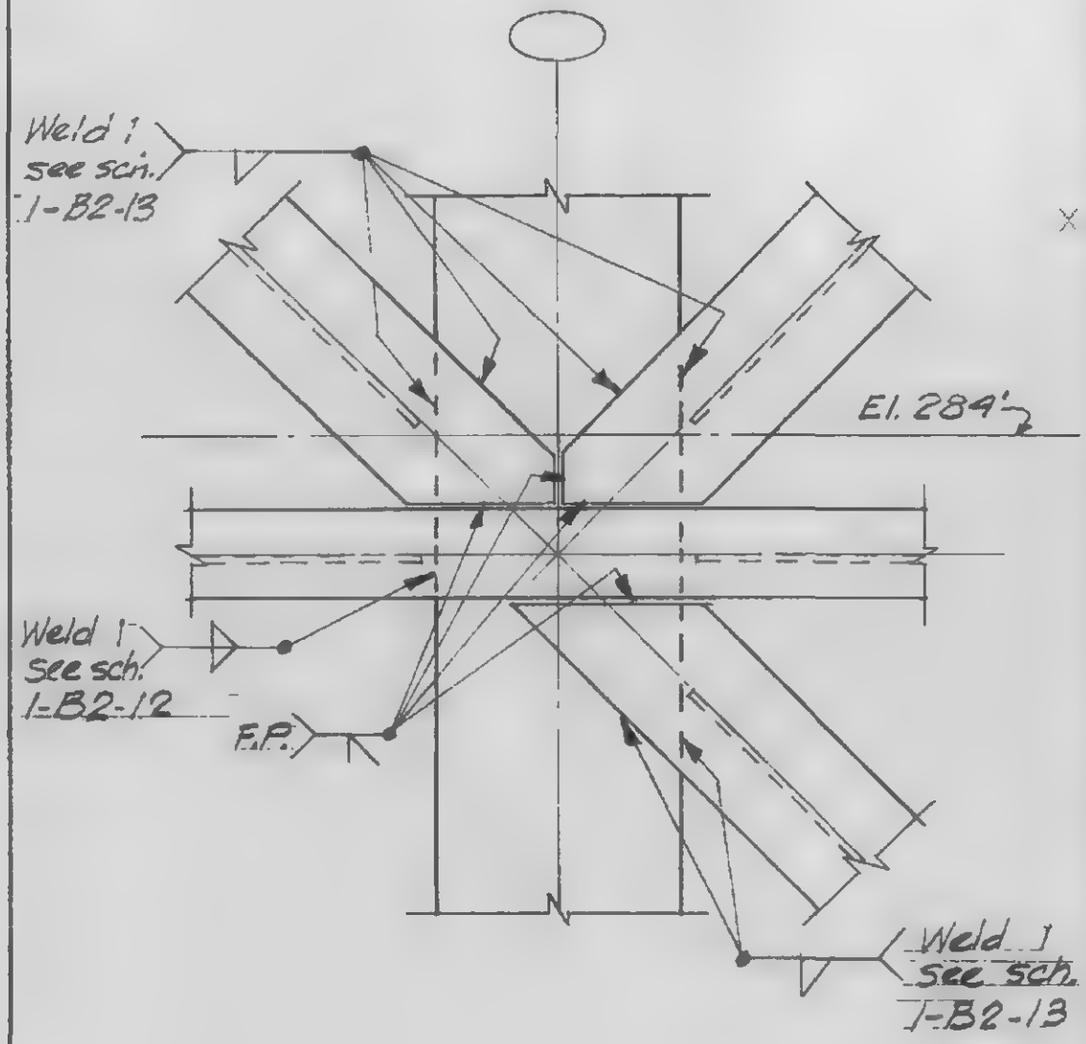

Detail 49

LICENSED PROFESSIONAL ENGINEER
LESLIE E. ROBERTSON
No. 34360
OF THE STATE OF N.Y.

1-B2-83

WORTHINGTON, SKILLING, HELLE & JACKSON — Civil & Structural Engineers

PROJECT THE WORLD TRADE CENTER | TITLE EXT. WALL TO EL. 363' - DETAILS 50, 51, 52 & 53 | DATE 3-31-67

REVISIONS

4-24-67

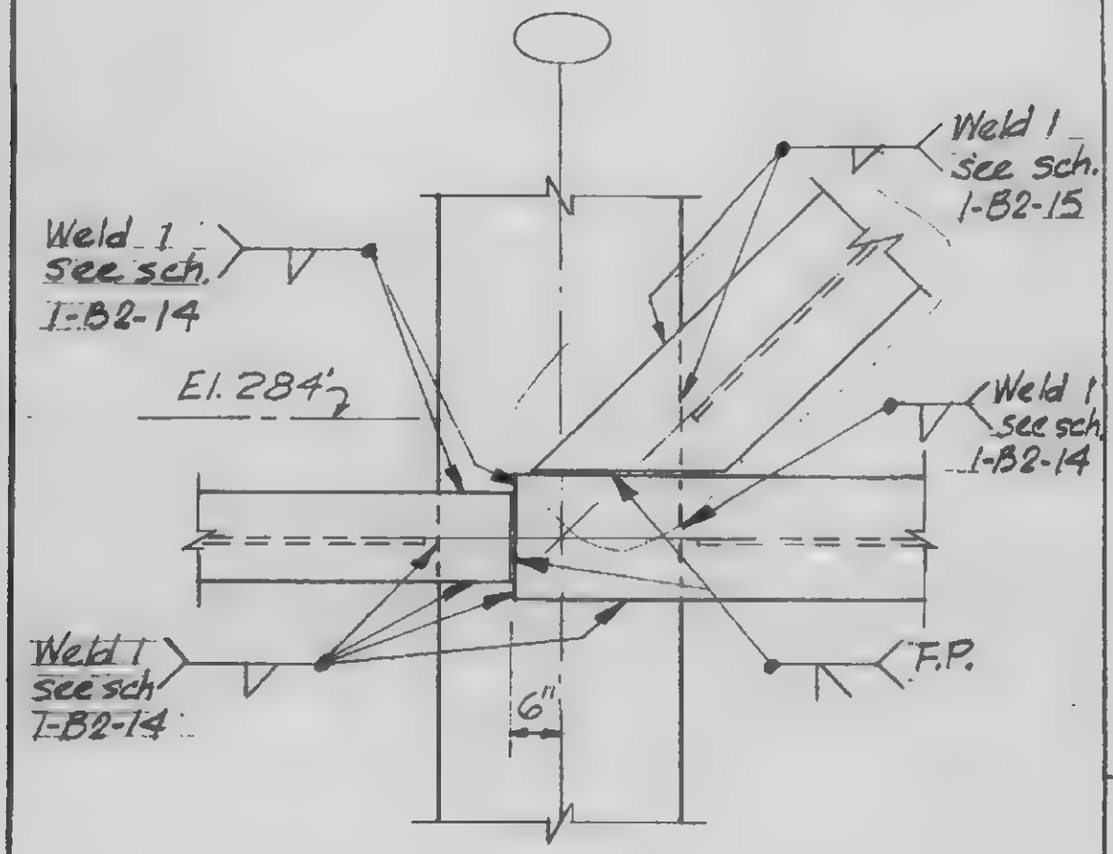

Detail 50
Detail 51 opp. hand

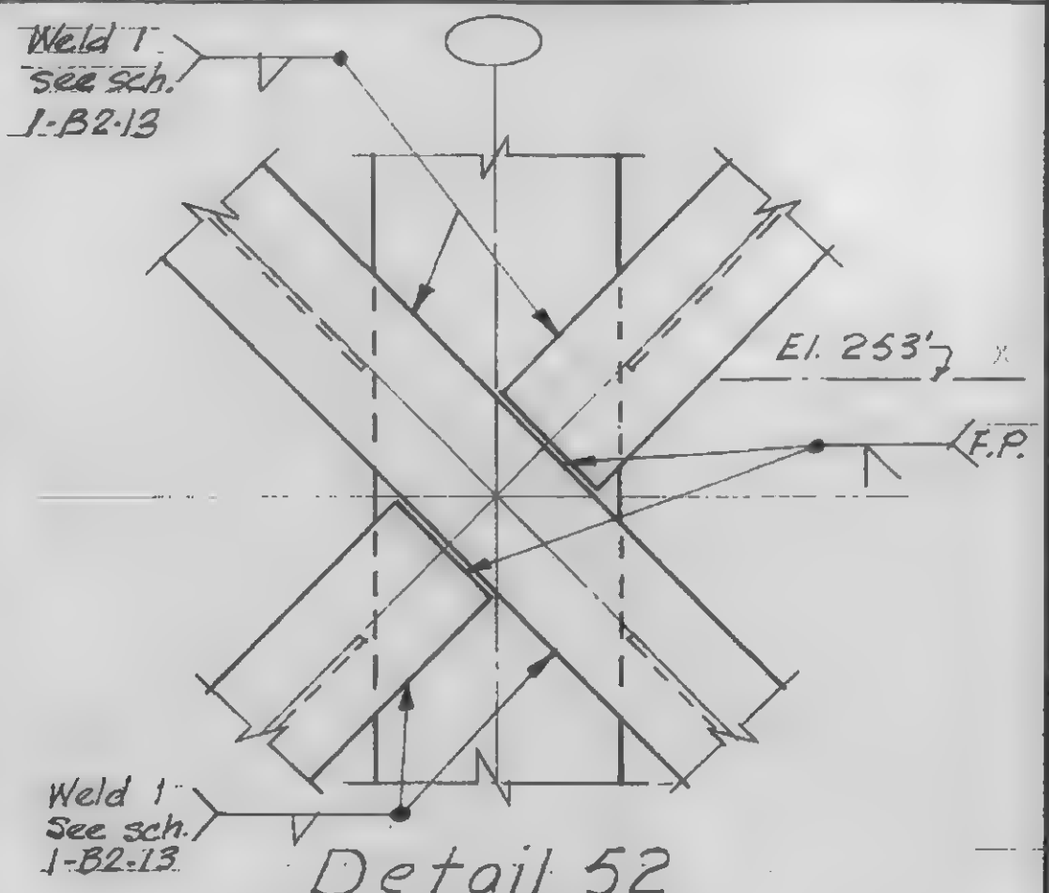

Detail 52

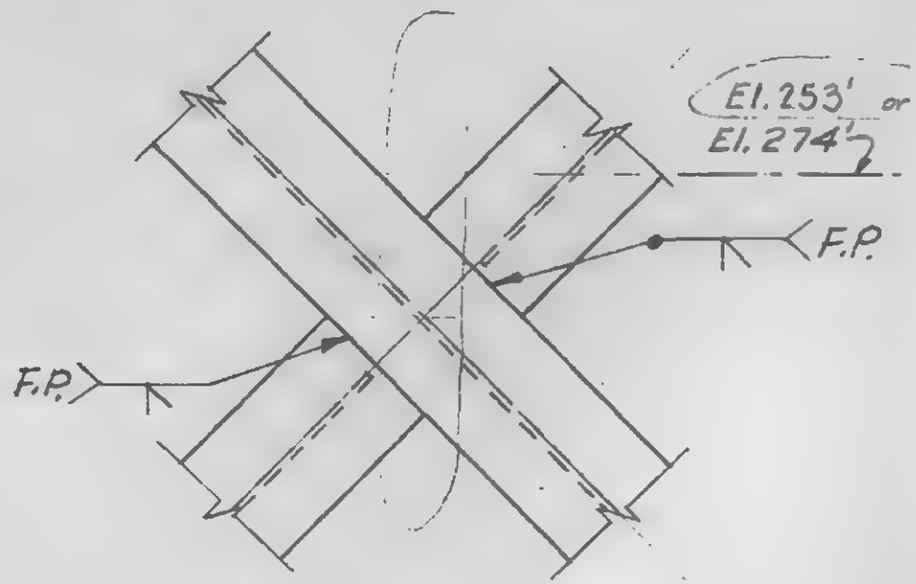

Detail 53

1-B2-84

LICENSED PROFESSIONAL ENGINEER
LESLIE E. ROBERTSON
No. 34360
STATE OF NEW YORK

WORTHINGTON, SKILLING, HELLE & JACKSON — Civil & Structural Engineers

PROJECT THE WORLD TRADE CENTER | TITLE EXTERIOR WALL TO EL. 363' - DETAILS 54, 55, 56 & 57 | DATE 3-31-67

REVISIONS

4-24-67

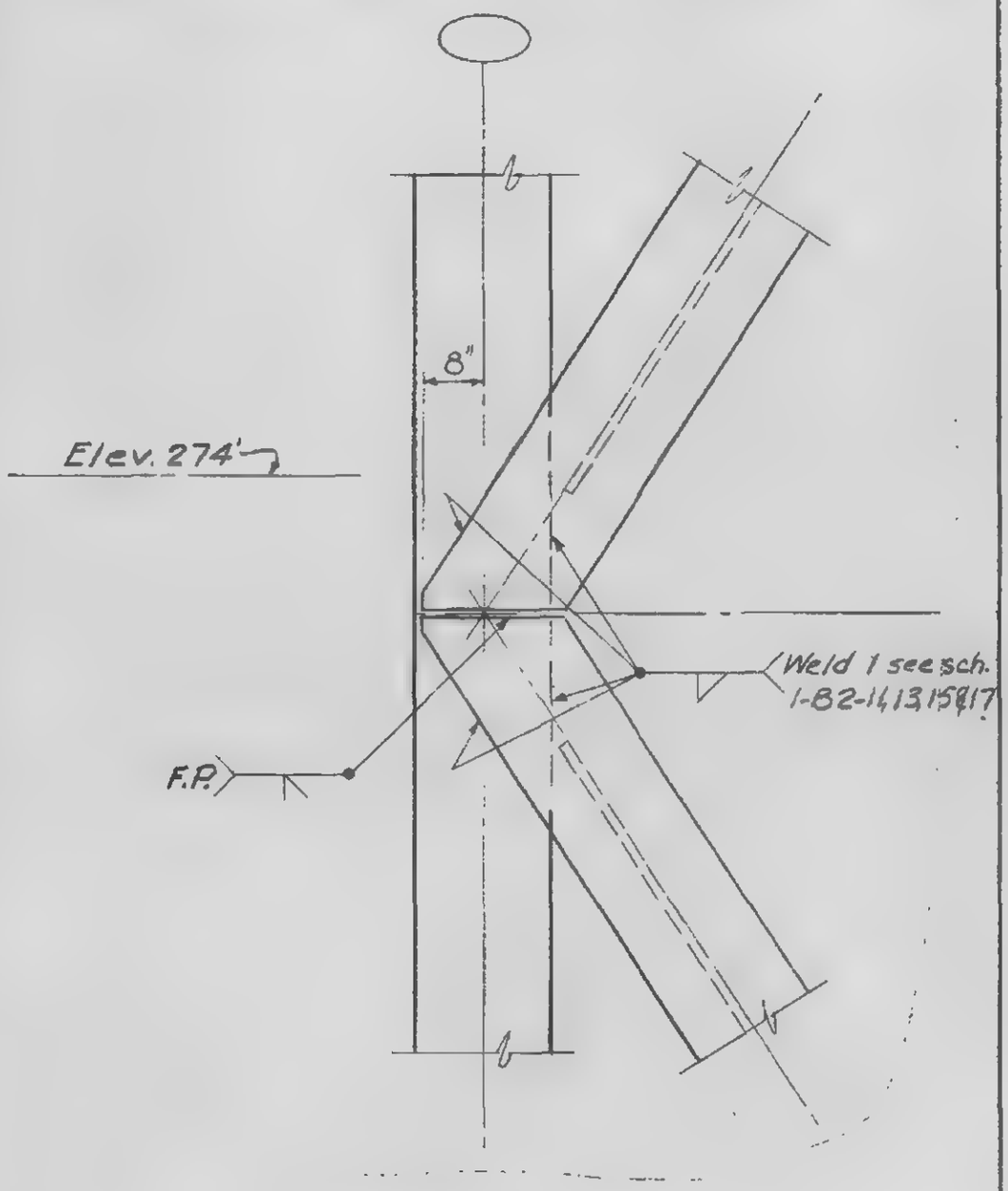

Detail 54

Detail 55 opp. hand

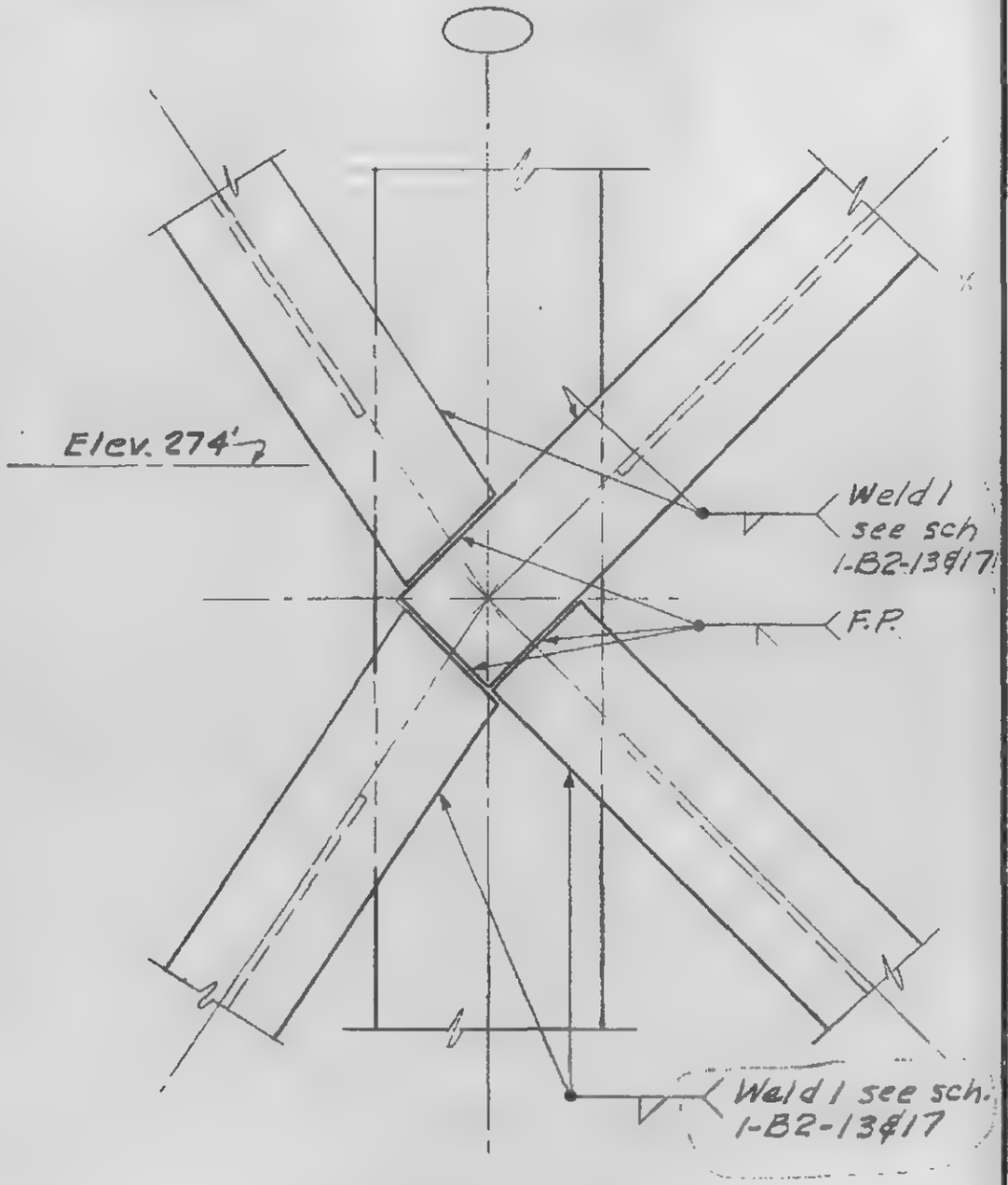

Detail 56

Detail 57 opp. hand

LICENSED PROFESSIONAL ENGINEER
LESLIE E. ROBERTSON
No. 34360
UNIVERSITY OF THE STATE OF NE. YORK

1-B2-85

WORTHINGTON, SKILLING, HELLE & JACKSON Civil & Structural Engineers

PROJECT THE WORLD TRADE CENTER | TITLE EXTERIOR WALL TO EL. 363' - DETAILS 58, 59, 60 & 61 | DATE 3-31-67

REVISIONS

4-24-67

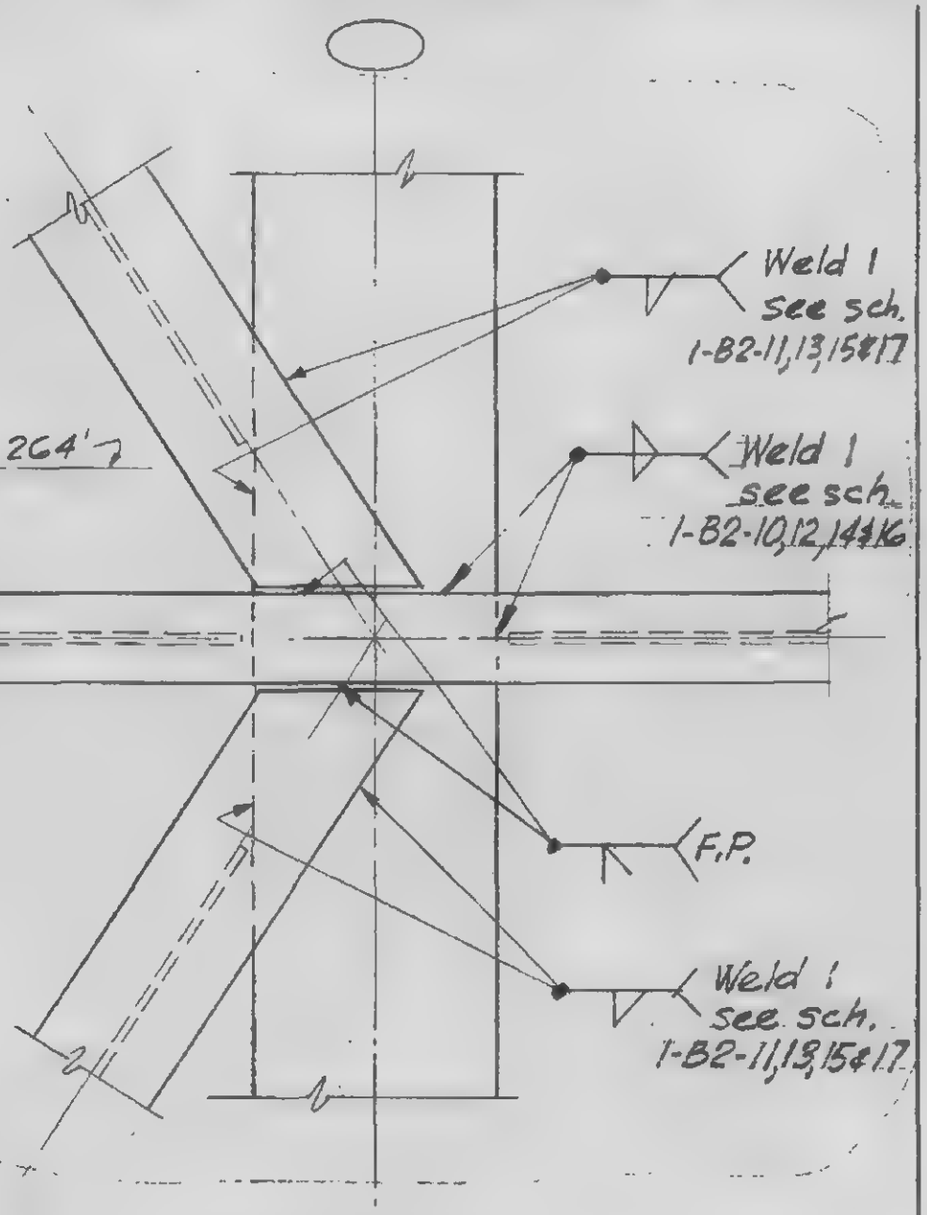

Detail 58

Detail 59 opp. hand

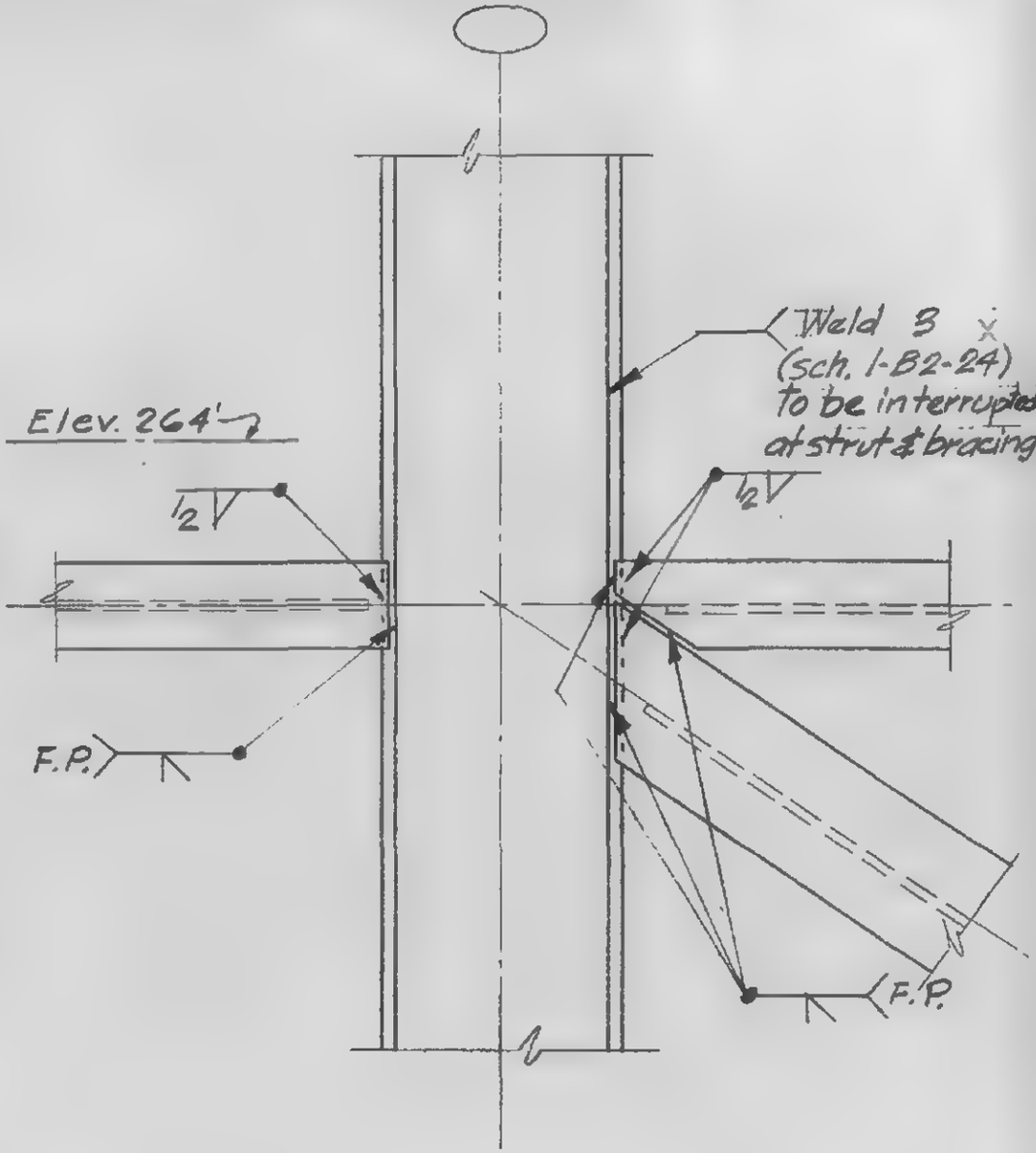

Detail 60

Detail 61 opp. hand

LICENSED PROFESSIONAL ENGINEER
LESLIE E. ROBERTSON
No. 34360
UNIVERSITY OF THE STATE OF NEW YORK

1-B2-86

WORTHINGTON, SKILLING, HELLE & JACKSON — Civil & Structural Engineers

PROJECT THE WORLD TRADE CENTER | TITLE EXT. WALL TO EL. 363'- DETAILS 62, 63 & 64 | DATE 3-31-67

REVISIONS

4-24-67

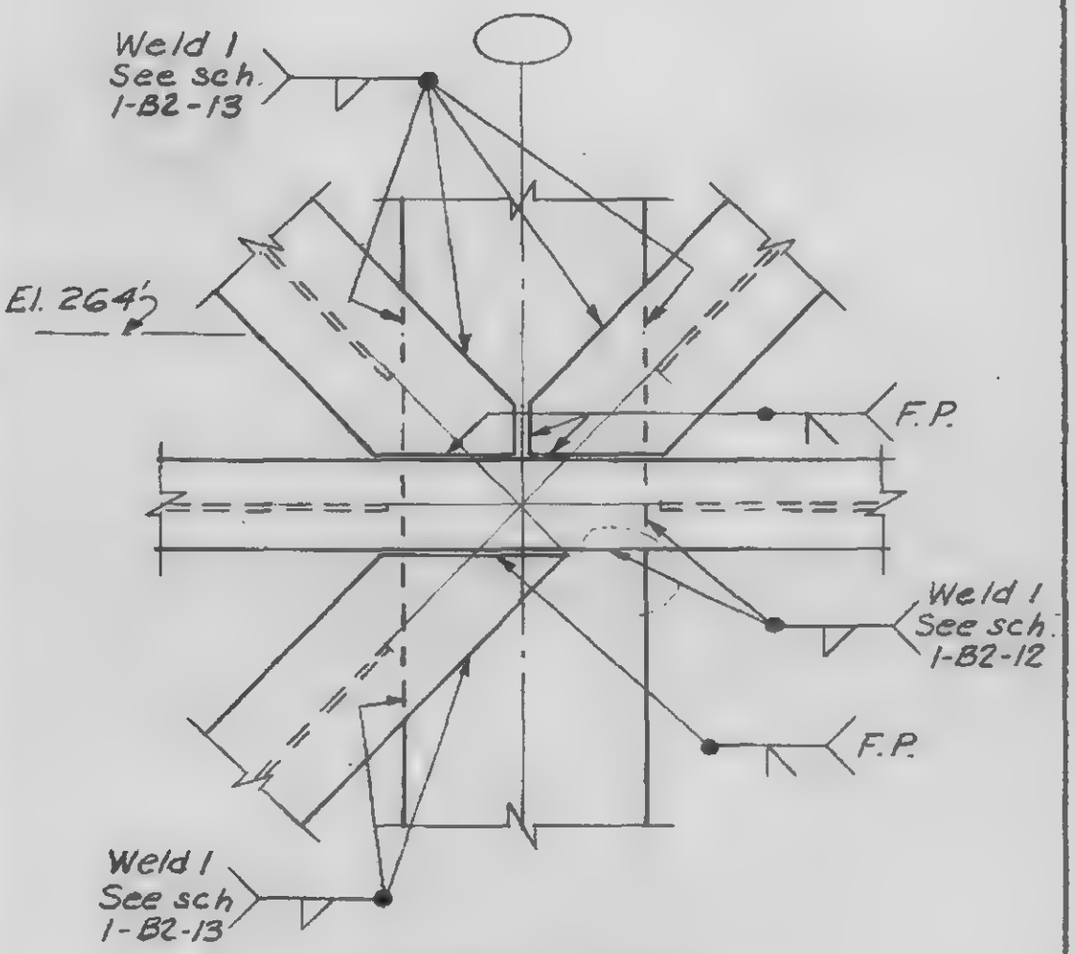

Detail 62

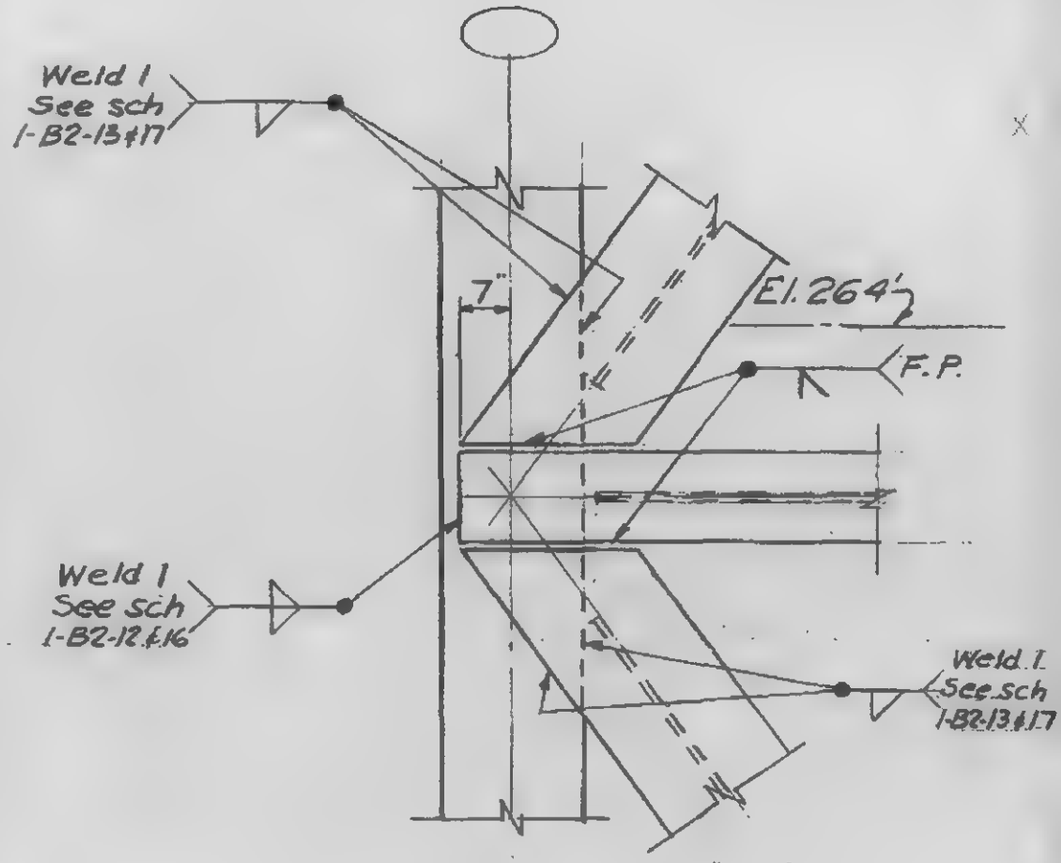

Detail 63

Detail 64 opp. hand

LICENSED PROFESSIONAL ENGINEER
LESLIE E. ROBERTSON
No. 34360
UNIVERSITY OF THE STATE OF NEW YORK

1-B2-87

WORTHINGTON, SKILLING, HELLE & JACKSON — Civil & Structural Engineers

PROJECT THE WORLD TRADE CENTER | TITLE EXTERIOR WALL TO EL. 363' - DETAILS 65, 66, 67 & 68 | DATE 3-31-67

REVISIONS

4-24-67

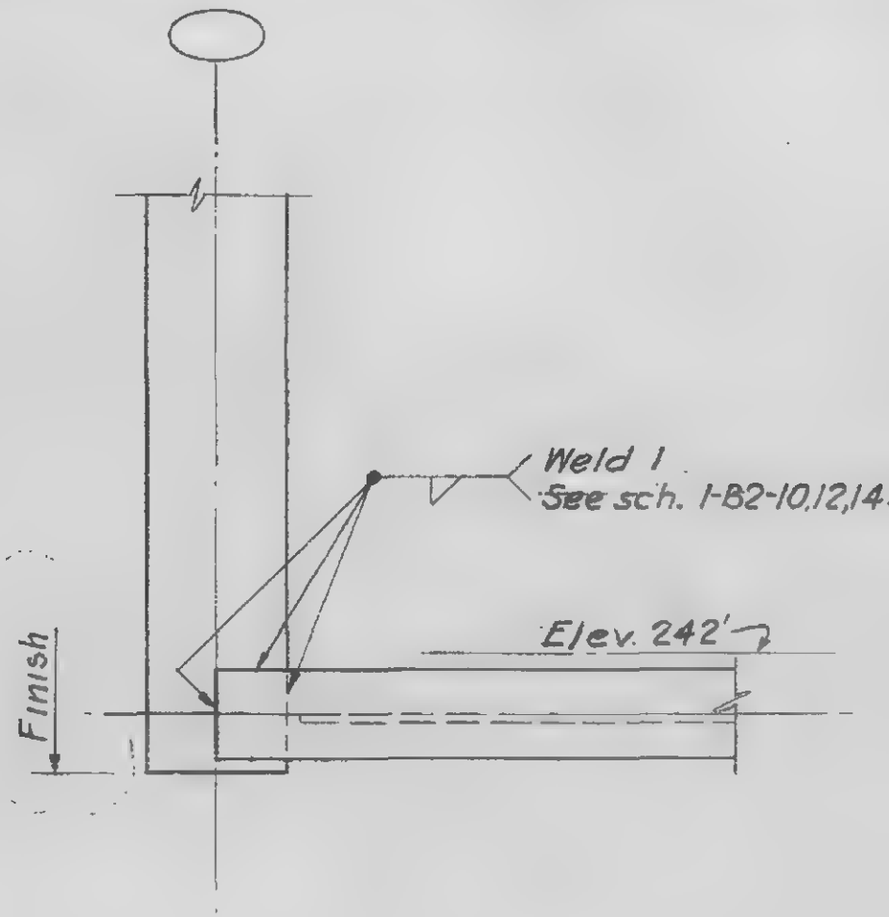

Detail 65

Detail 66 opp. hand

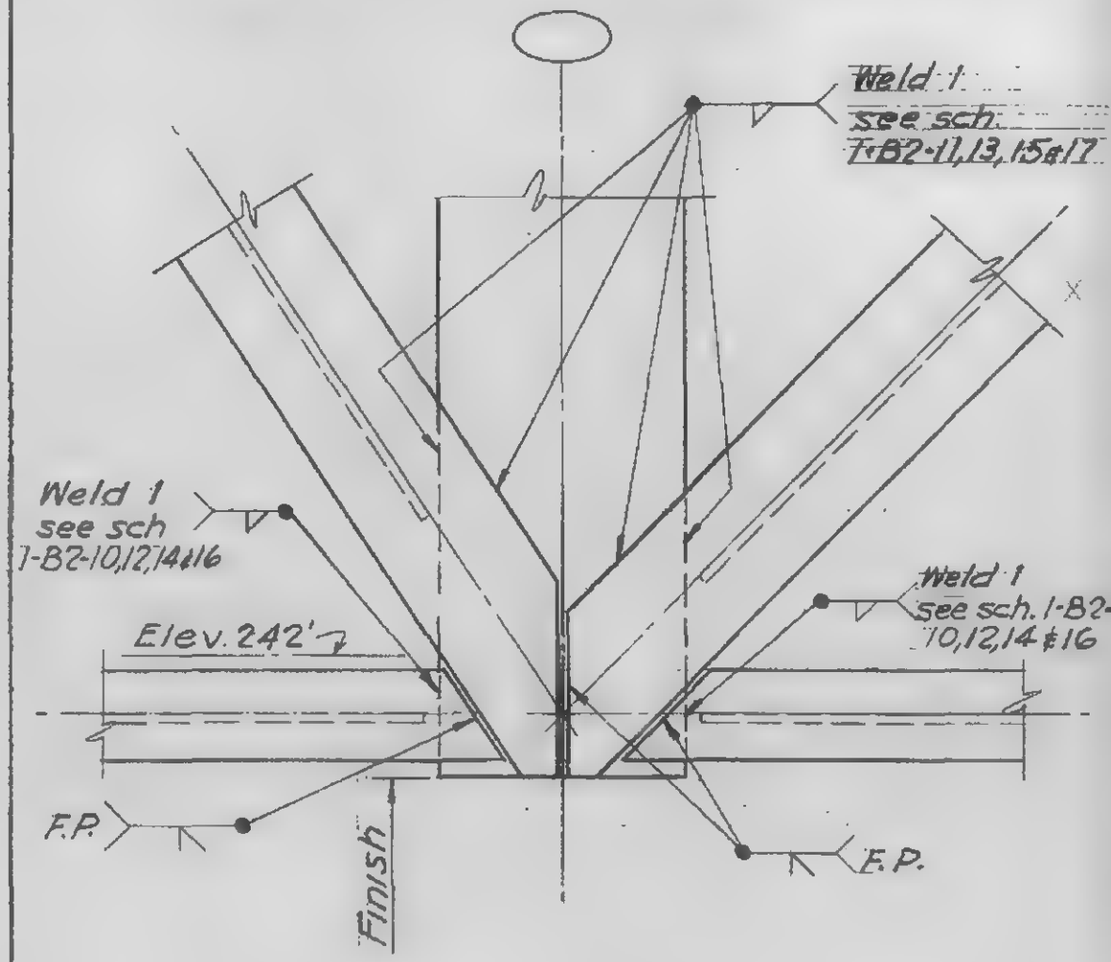

Detail 67

Detail 68 opp. hand

LICENSED PROFESSIONAL ENGINEER
LESLIE E. ROBERTSON
No. 34360
UNIVERSITY OF THE STATE OF NEW YORK

1-B2-88

WORTHINGTON, SKILLING, HELLE & JACKSON — Civil & Structural Engineers

PROJECT THE WORLD TRADE CENTER | TITLE EXTERIOR WALL TO EL. 363'-DETAILS 69, 70, 71 & 72 | DATE 3-31-67

REVISIONS

4-24-67

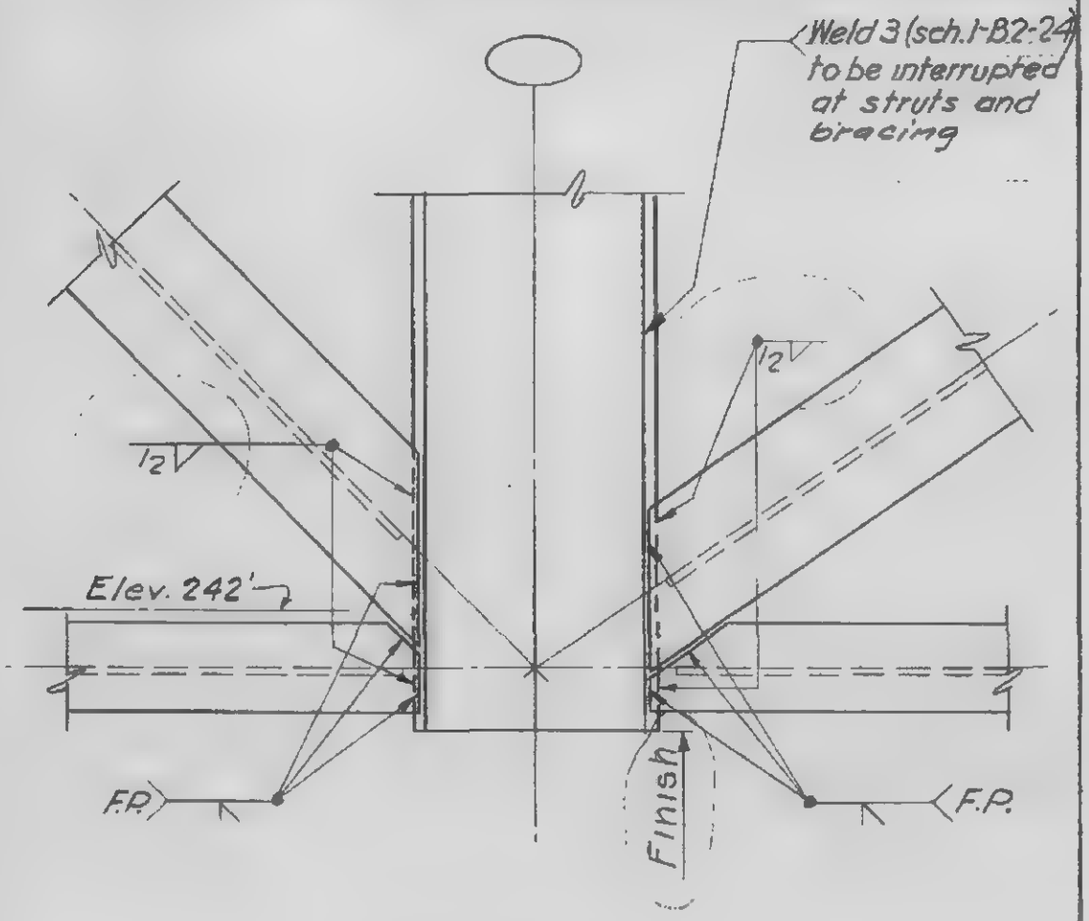

Detail 69

Detail 70 opp. hand

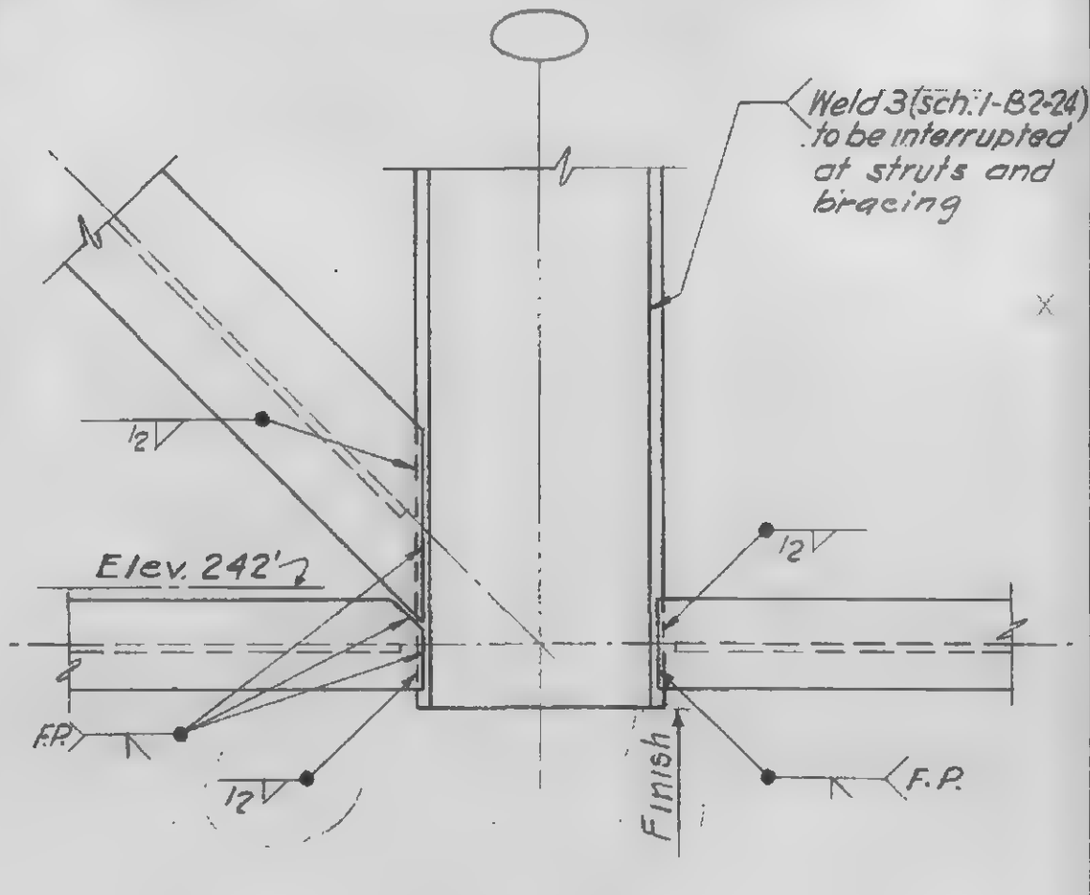

Detail 71

Detail 72 opp. hand

LICENSED PROFESSIONAL ENGINEER
LESLIE E. ROBERTSON
No. 34360
UNIVERSITY OF THE STATE OF NEW YORK

1-B2-89

WORTHINGTON, SKILLING, HELLE & JACKSON — Civil & Structural Engineers

PROJECT THE WORLD TRADE CENTER | TITLE EXTERIOR WALL TO EL. 363' - DETAILS 73 & 74 | DATE 3-31-67

REVISIONS

4-24-67

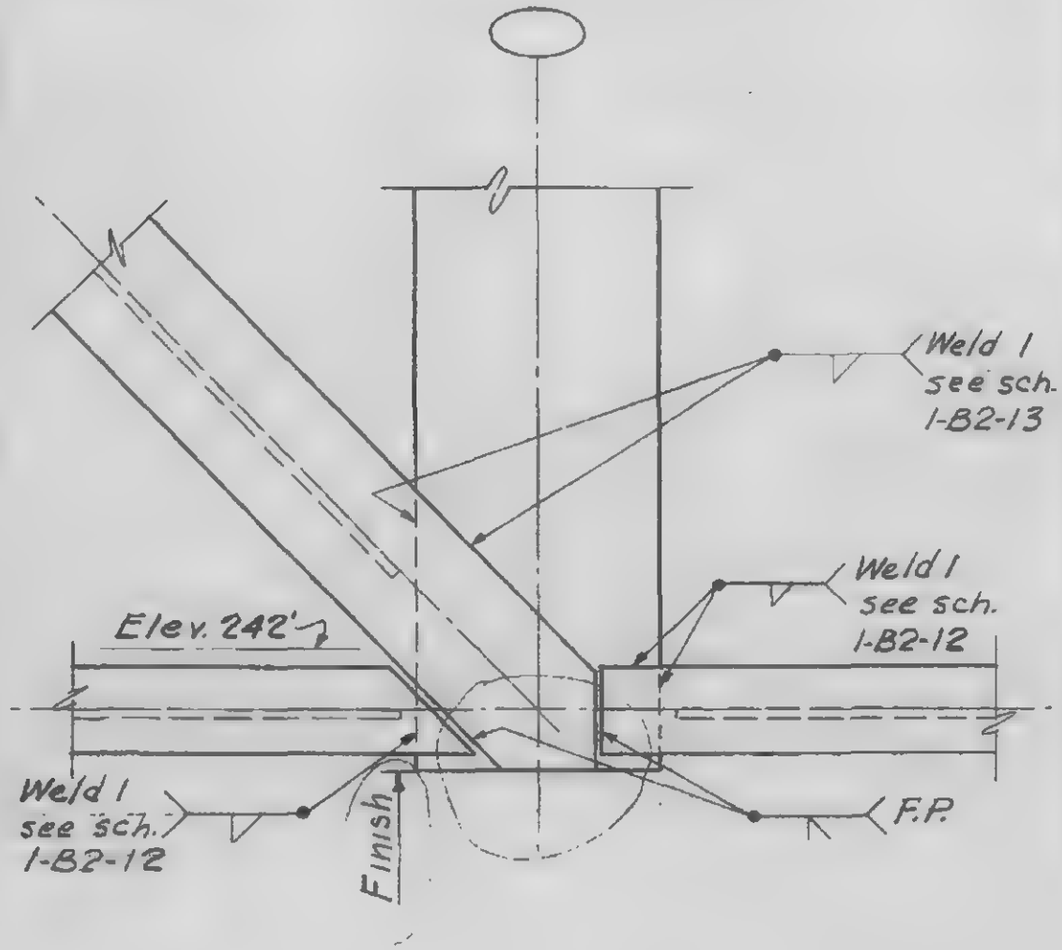

Detail 73

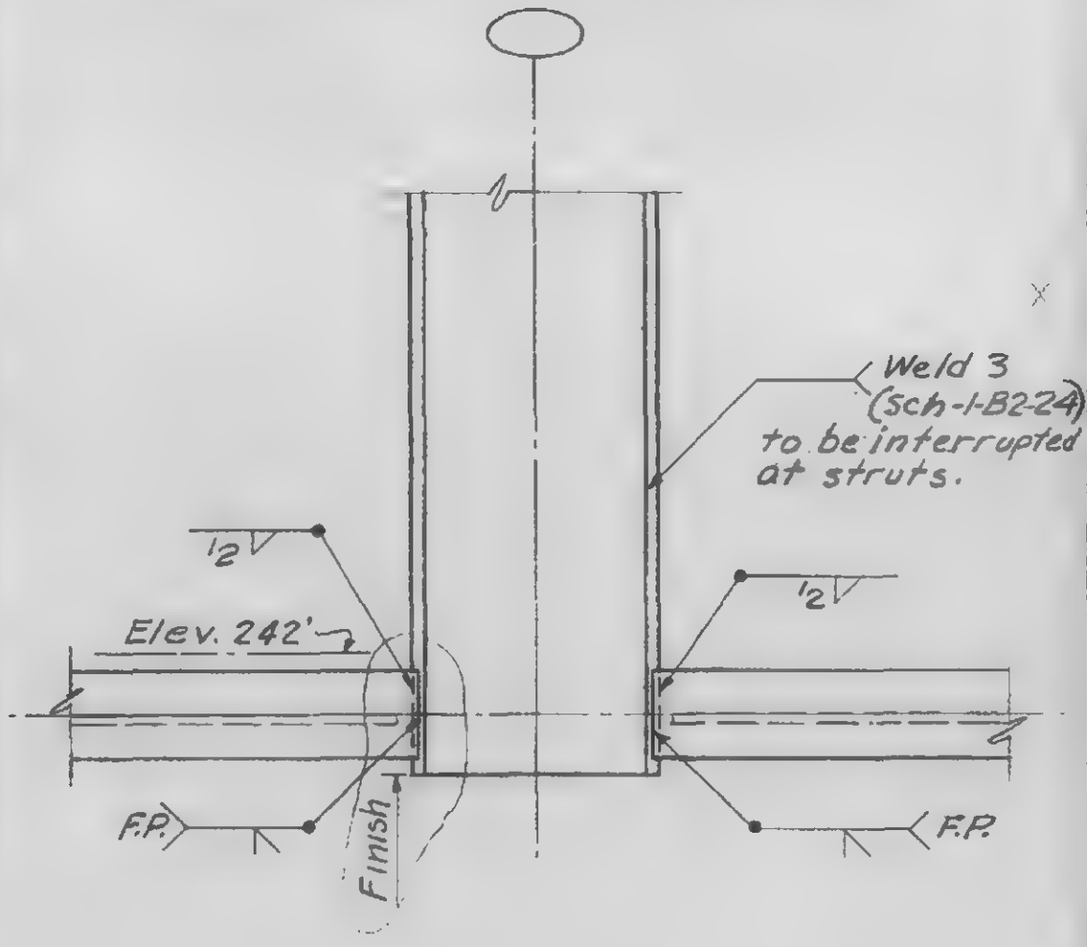

Detail 74

LICENSED PROFESSIONAL ENGINEER
LESLIE E. ROBERTSON
No. 34360
UNIVERSITY OF THE STATE OF NEW YORK

1-B2-90

WORTHINGTON, SKILLING, HELLE & JACKSON — Civil & Structural Engineers

PROJECT THE WORLD TRADE CENTER | TITLE EXTERIOR WALL TO EL. 363' - DETAILS 75, 76 & 77 | DATE 3-31-67

REVISIONS

4-24-67

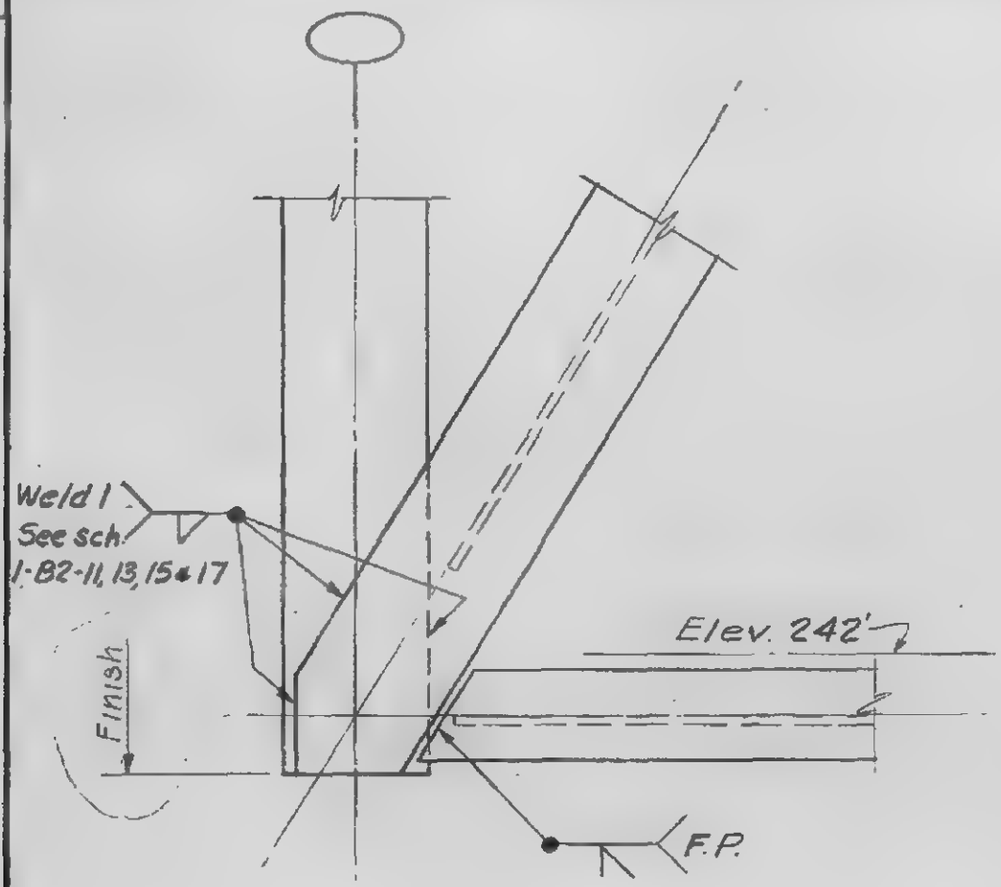

Detail 75

Detail 76 opp. hand

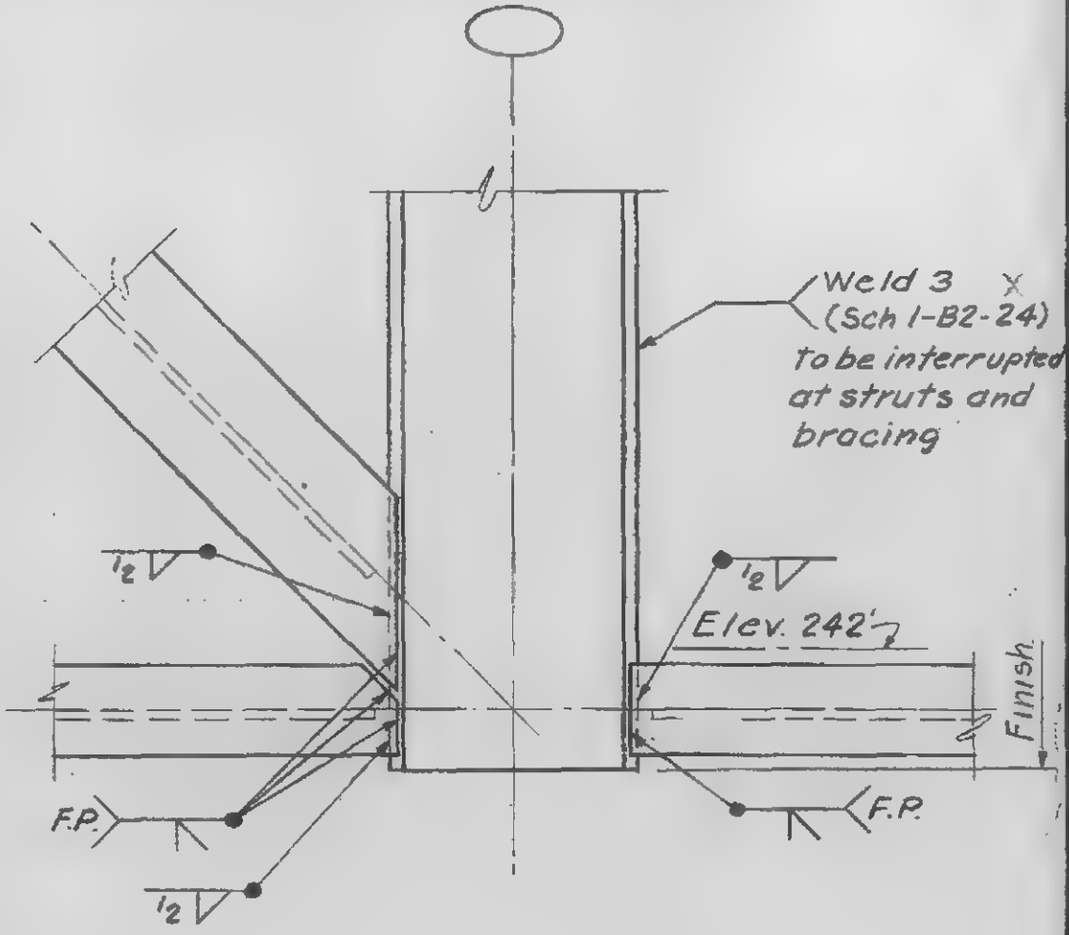

Detail 77

LICENSED PROFESSIONAL ENGINEER
LESLIE E. ROBERTSON
No. 34360
STATE OF NEW YORK

1-B2-91

WORTHINGTON, SKILLING, HELLE & JACKSON — Civil & Structural Engineers

PROJECT THE WORLD TRADE CENTER | TITLE EXTERIOR WALL TO EL. 363' - DETAILS 78, 79 & 80 | DATE 3-31-67

REVISIONS

4-24-67

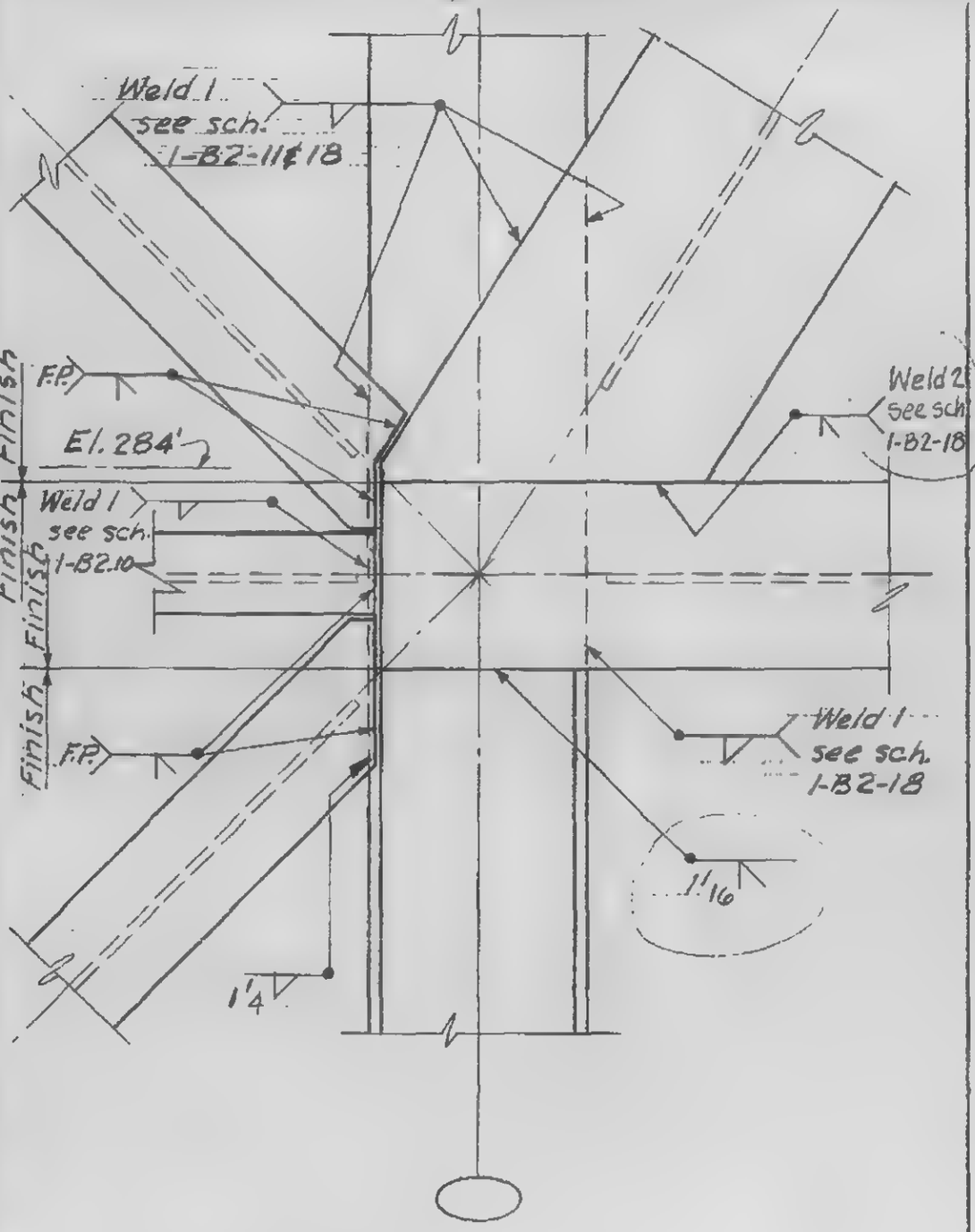

Detail 78

Detail 79 opp. hand

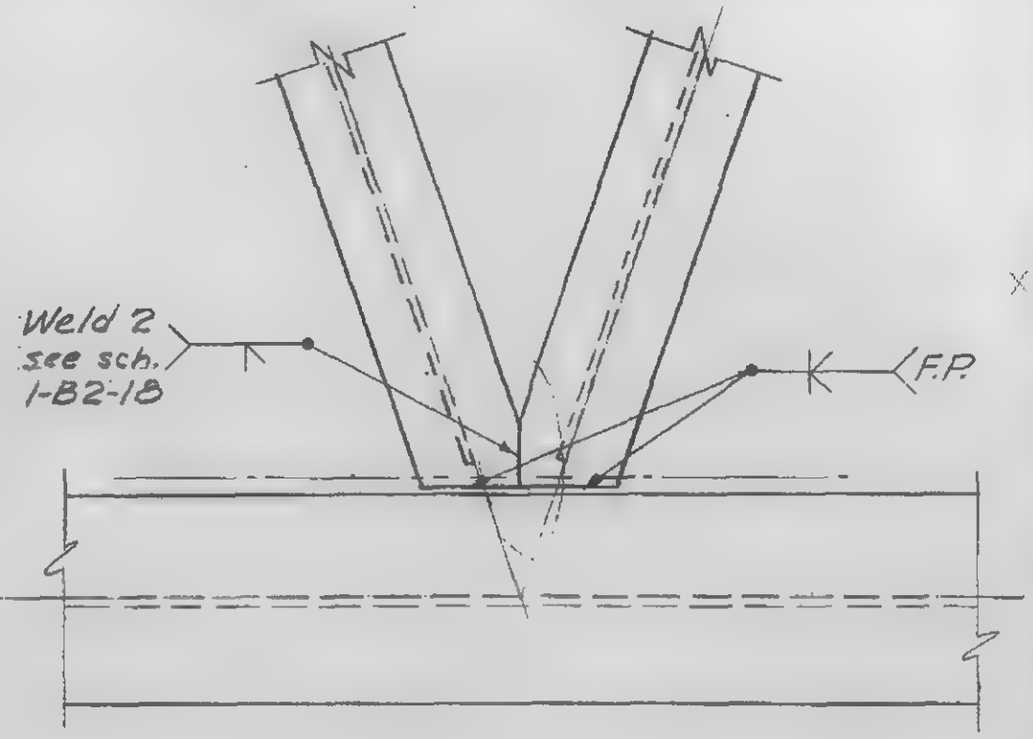

Detail 80

LICENSED PROFESSIONAL ENGINEER
LESLIE E. ROBERTSON
No. 34360
UNIVERSITY OF THE STATE OF NEW YORK

1-B2-92

WORTHINGTON, SKILLING, HELLE & JACKSON — Civil & Structural Engineers

PROJECT THE WORLD TRADE CENTER | TITLE EXTERIOR WALL TO EL. 363' - DETAILS 81 & 82 | DATE 3-31-67

REVISIONS

4-24-67

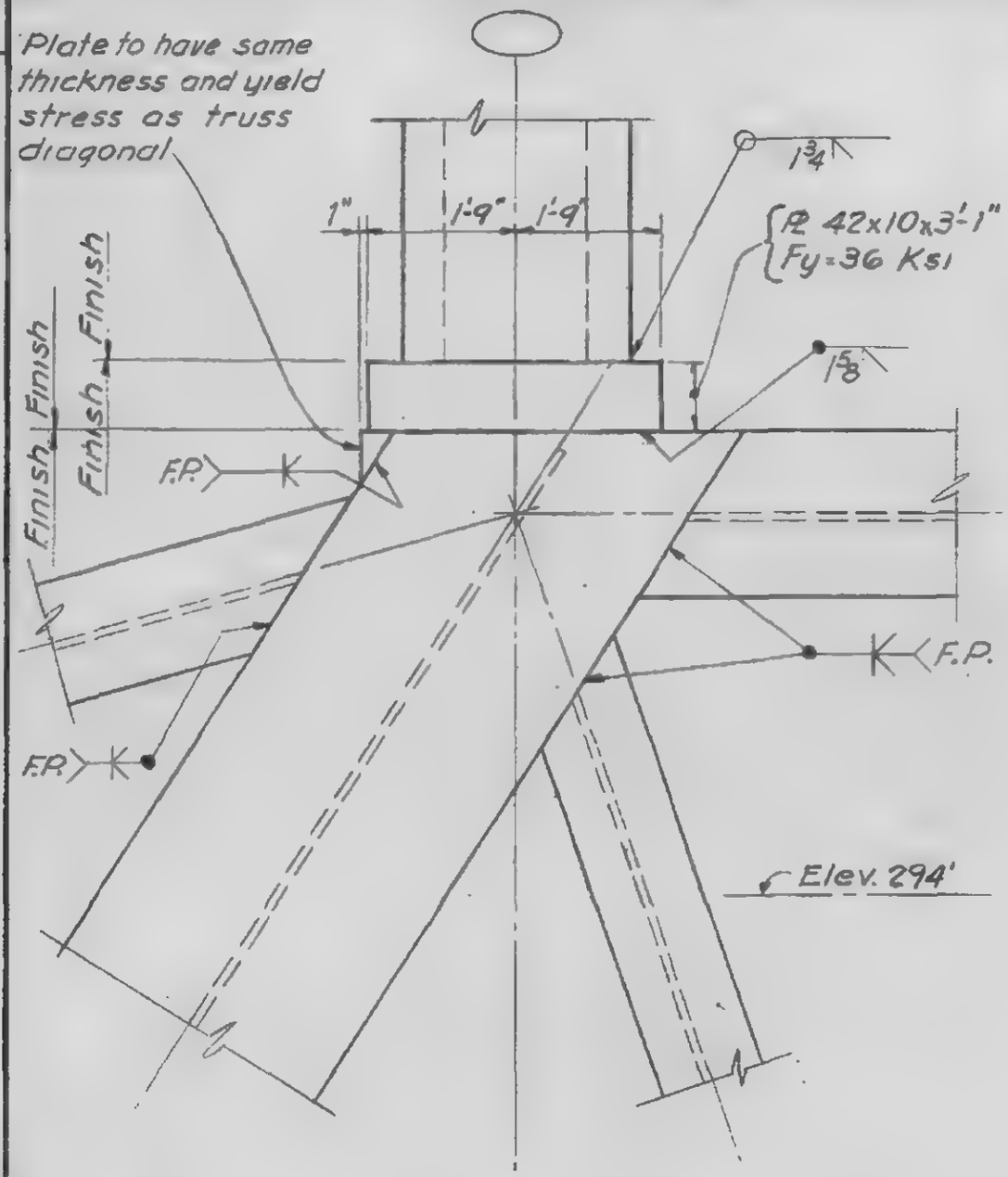

Detail 81

Detail 82 opp. hand

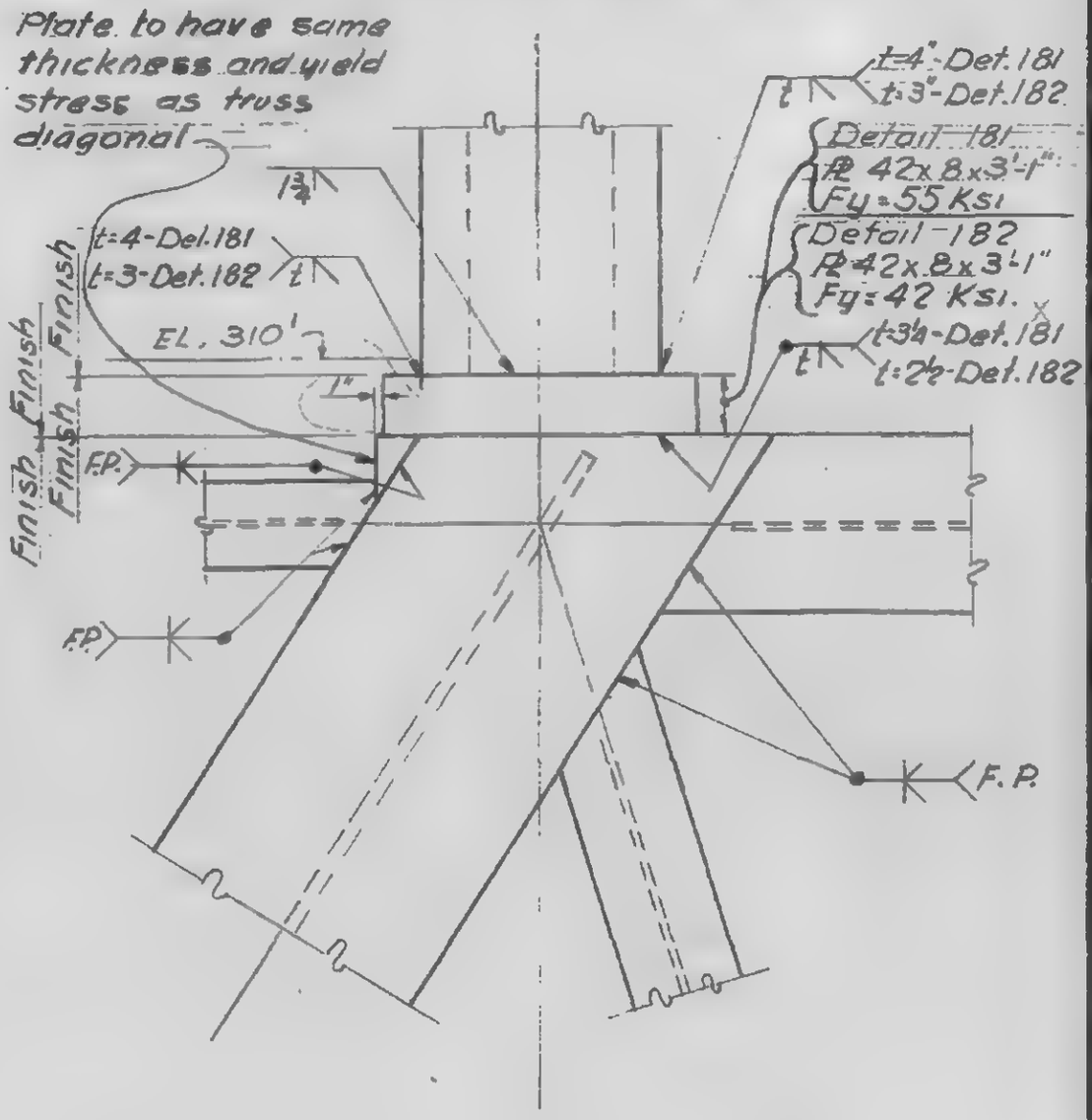

Detail 181

Detail 182 opp. hand and as noted

LICENSED PROFESSIONAL ENGINEER
LESLIE E. ROBERTSON
No. 34360
UNIVERSITY OF THE STATE OF NEW YORK

1-B2-93

WORTHINGTON, SKILLING, HELLE & JACKSON — Civil & Structural Engineers

PROJECT THE WORLD TRADE CENTER | TITLE EXTERIOR WALL TO EL. 363' – DETAILS 83 & 84 | DATE 3-31-67

REVISIONS

4-24-67

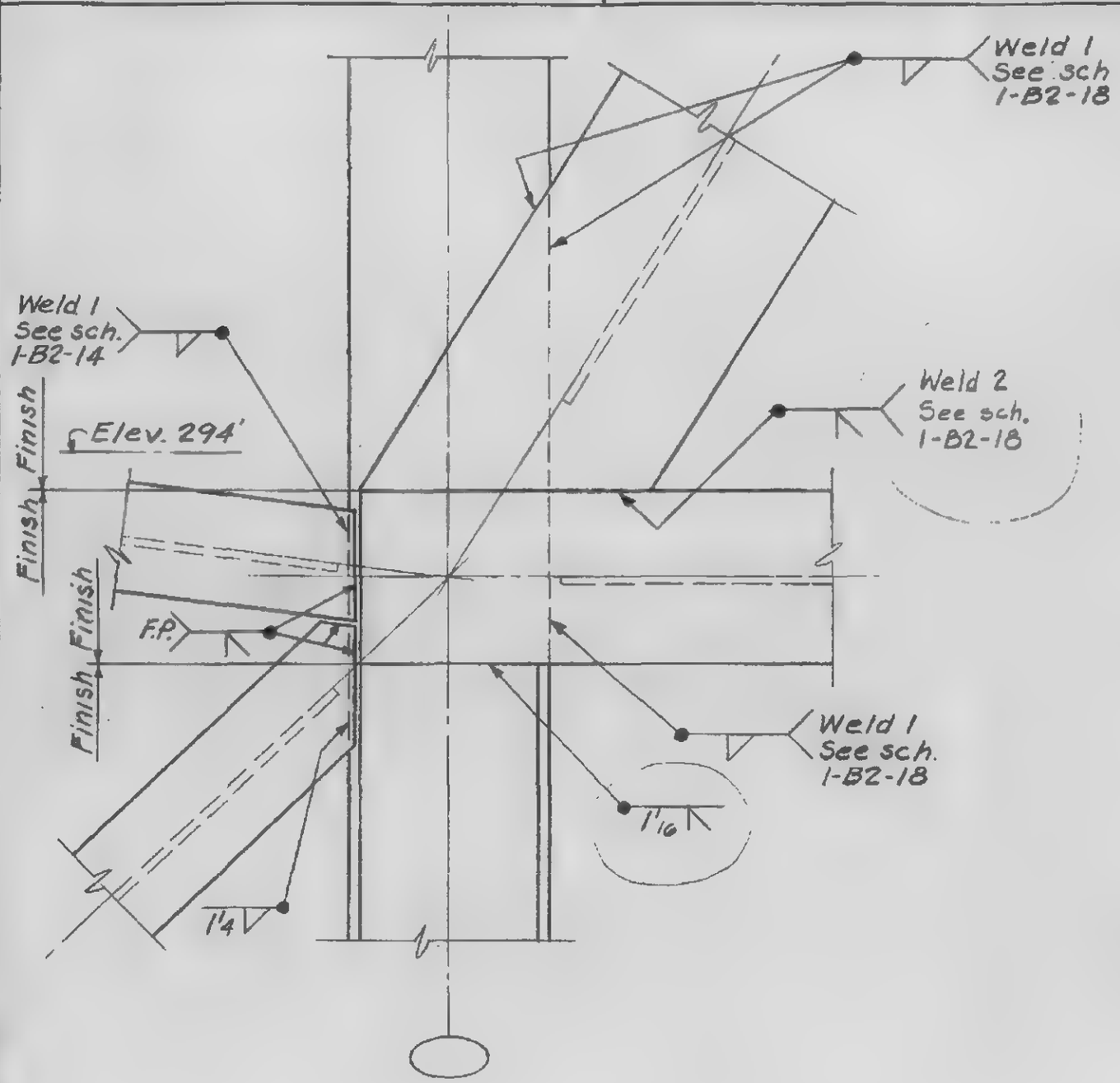

Detail 83

Detail 84 opp. hand

LICENSED PROFESSIONAL ENGINEER
LESLIE E. ROBERTSON
No. 34360
UNIVERSITY OF THE STATE OF NEW YORK

1-B2-94

WORTHINGTON, SKILLING, HELLE & JACKSON — Civil & Structural Engineers

PROJECT THE WORLD TRADE CENTER | TITLE EXTERIOR WALL TO EL. 363' - DETAILS 85, 86 & 87 | DATE 3-31-67

REVISIONS

4-24-67

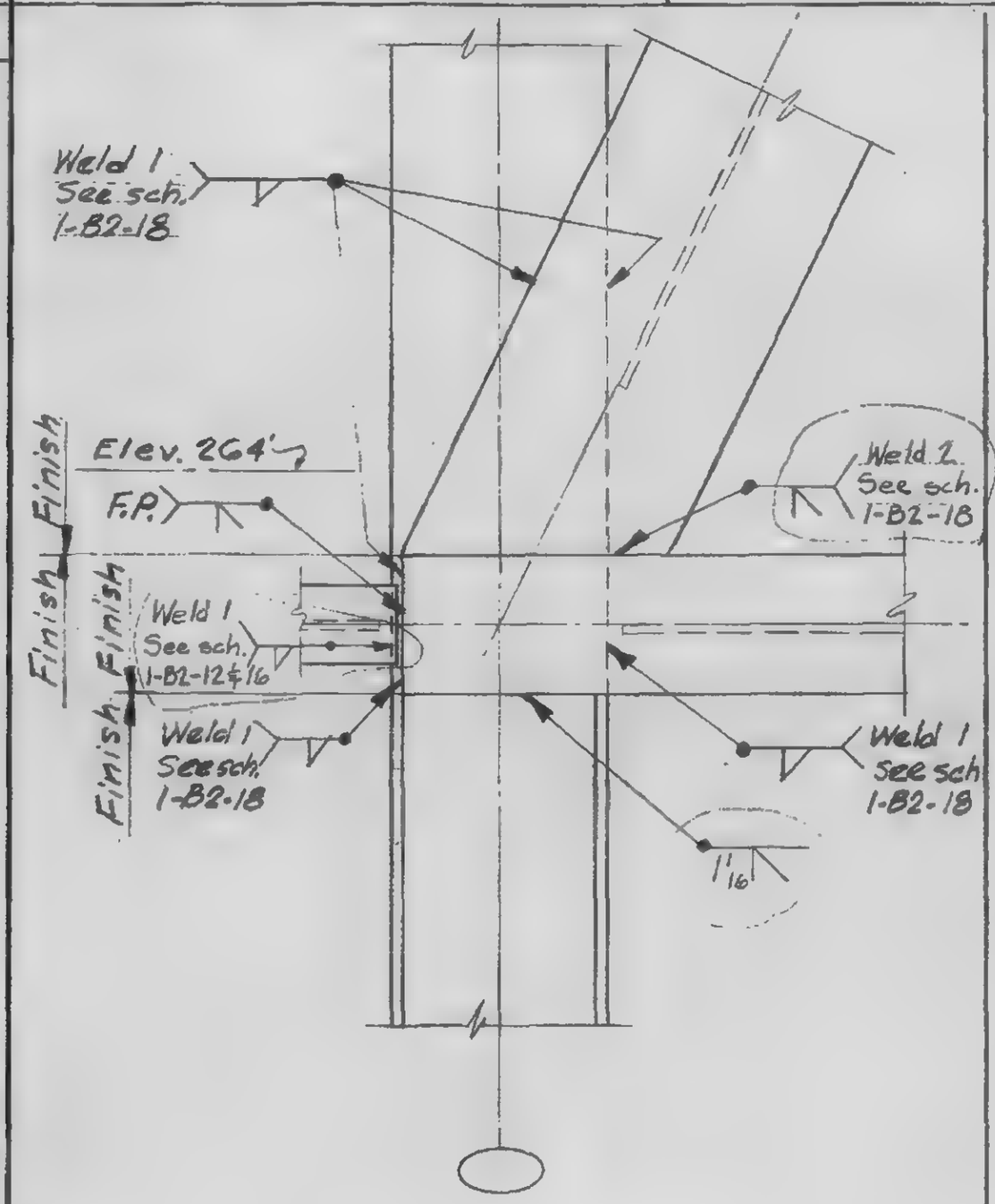

Detail 85

Detail 86 opp. hand

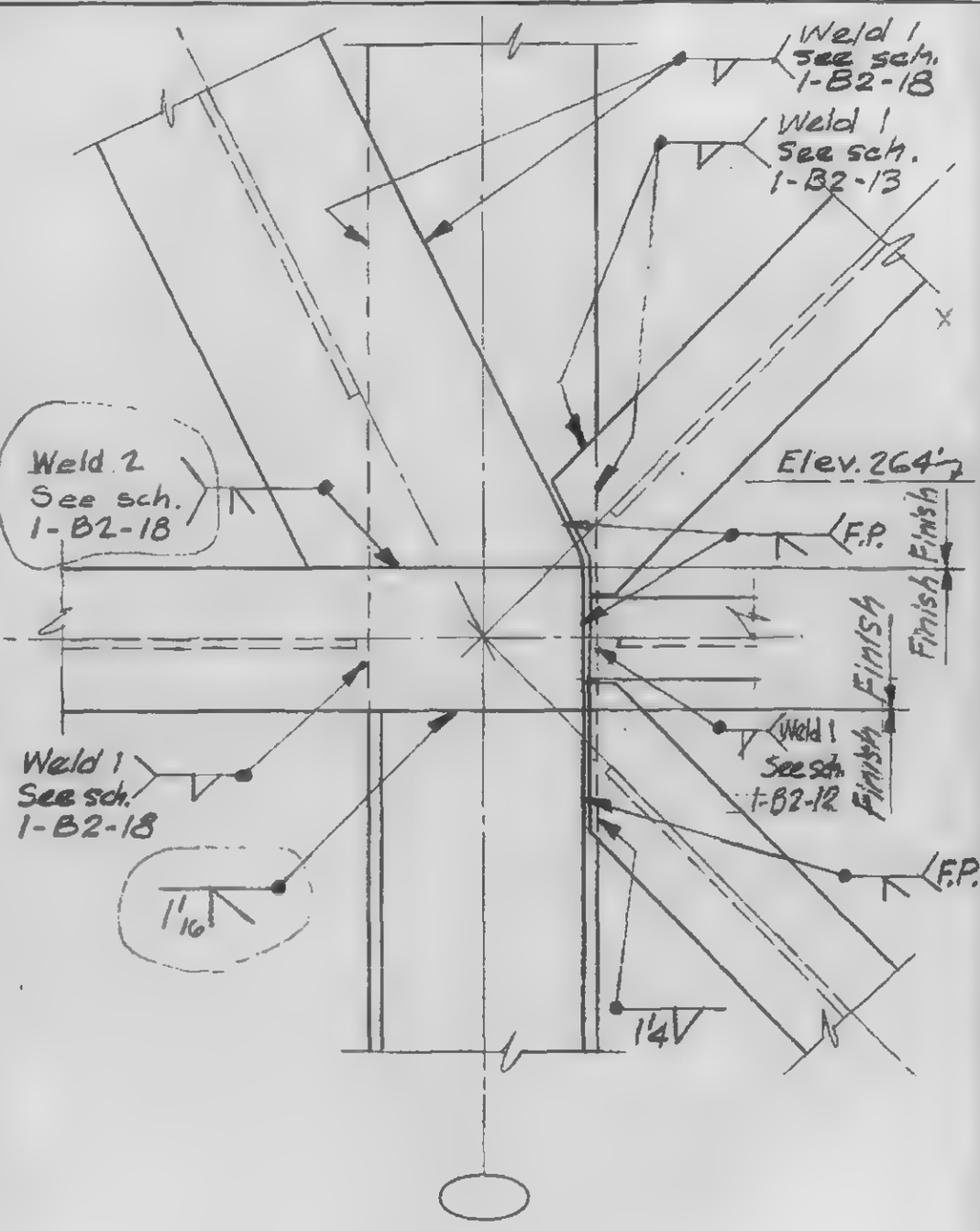

Detail 87

LICENSED PROFESSIONAL ENGINEER
LESLIE E. ROBERTSON
No. 34360
UNIVERSITY OF THE STATE OF NEW YORK

1-B2-95

WORTHINGTON, SKILLING, HELLE & JACKSON — Civil & Structural Engineers

PROJECT THE WORLD TRADE CENTER | TITLE EXT. WALL TO EL. 363'-DETAILS 88, 89 & 90 | DATE 3-31-67

REVISIONS

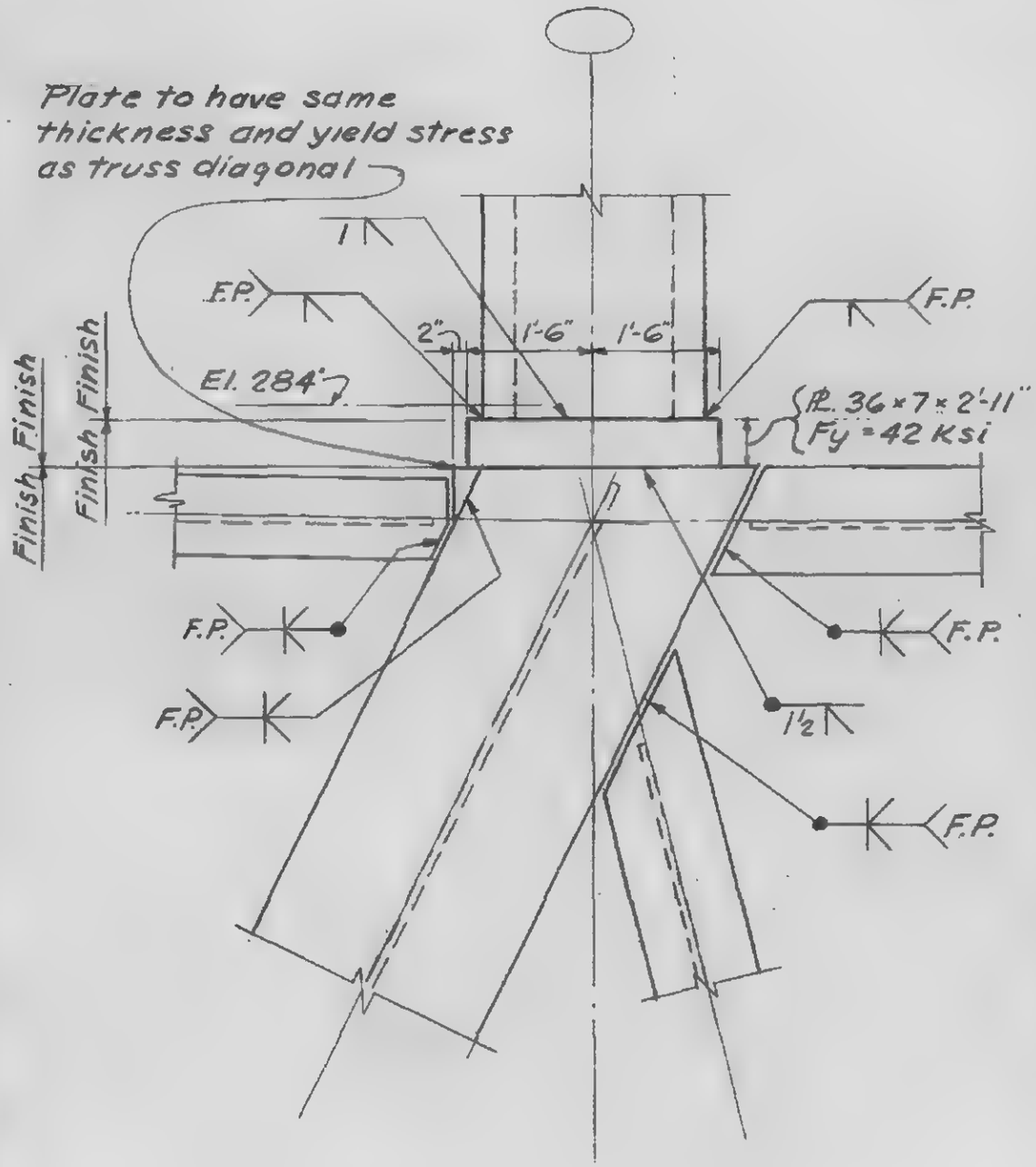

Detail 89

Detail 90 opp. hand

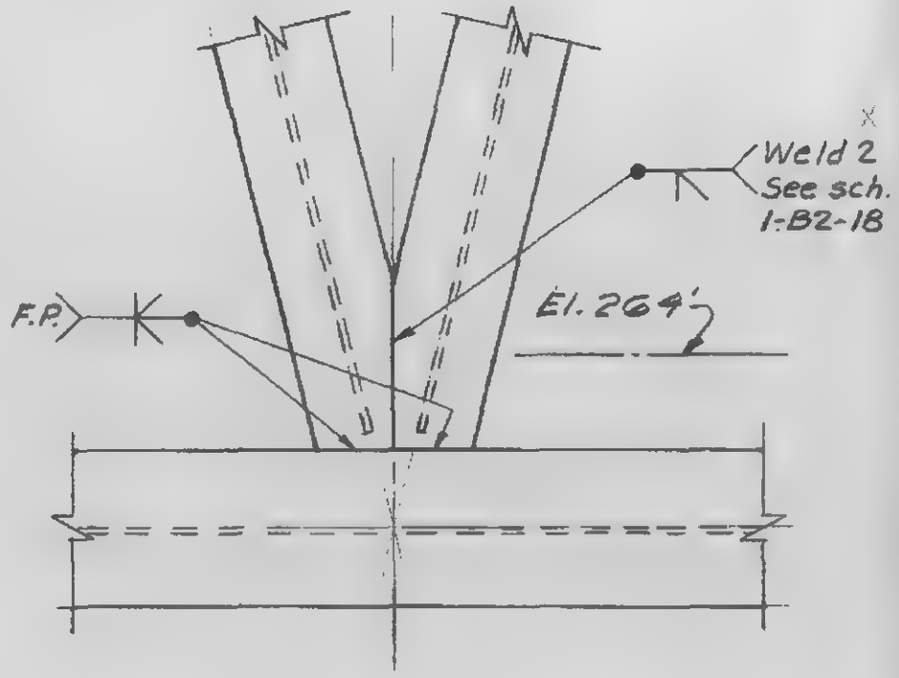

Detail 88

LICENSED PROFESSIONAL ENGINEER
LESLIE E. ROBERTSON
No. 34360
UNIVERSITY OF THE STATE OF NEW YORK

1-B2-96

WORTHINGTON, SKILLING, HELLE & JACKSON — Civil & Structural Engineers

PROJECT THE WORLD TRADE CENTER | TITLE EXTERIOR WALL TO EL. 363' - DETAILS 91, 92 & 93 | DATE 3-31-67

REVISIONS

4-24-67

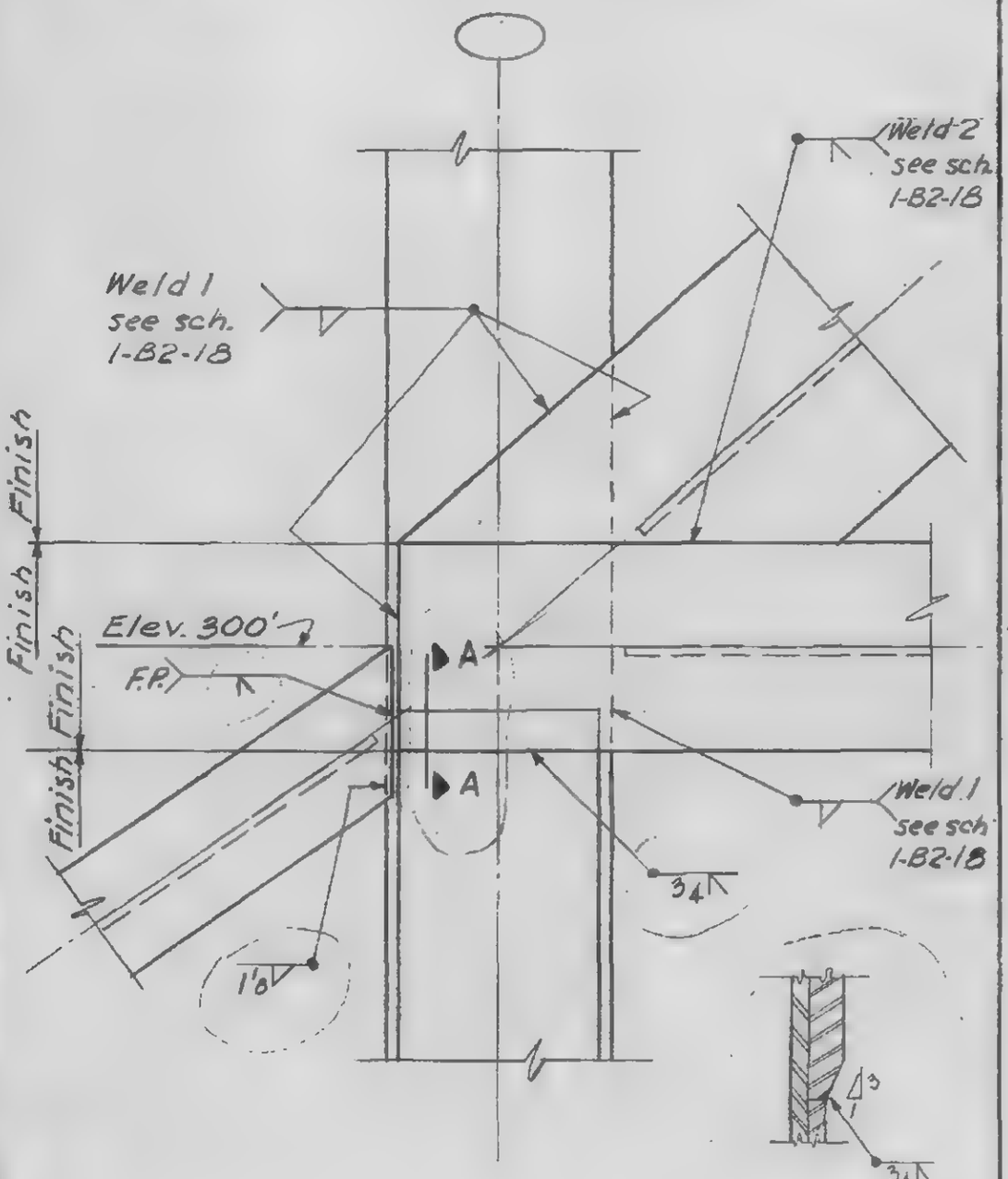

Section A-A

Detail 91

Detail 92 opp. hand

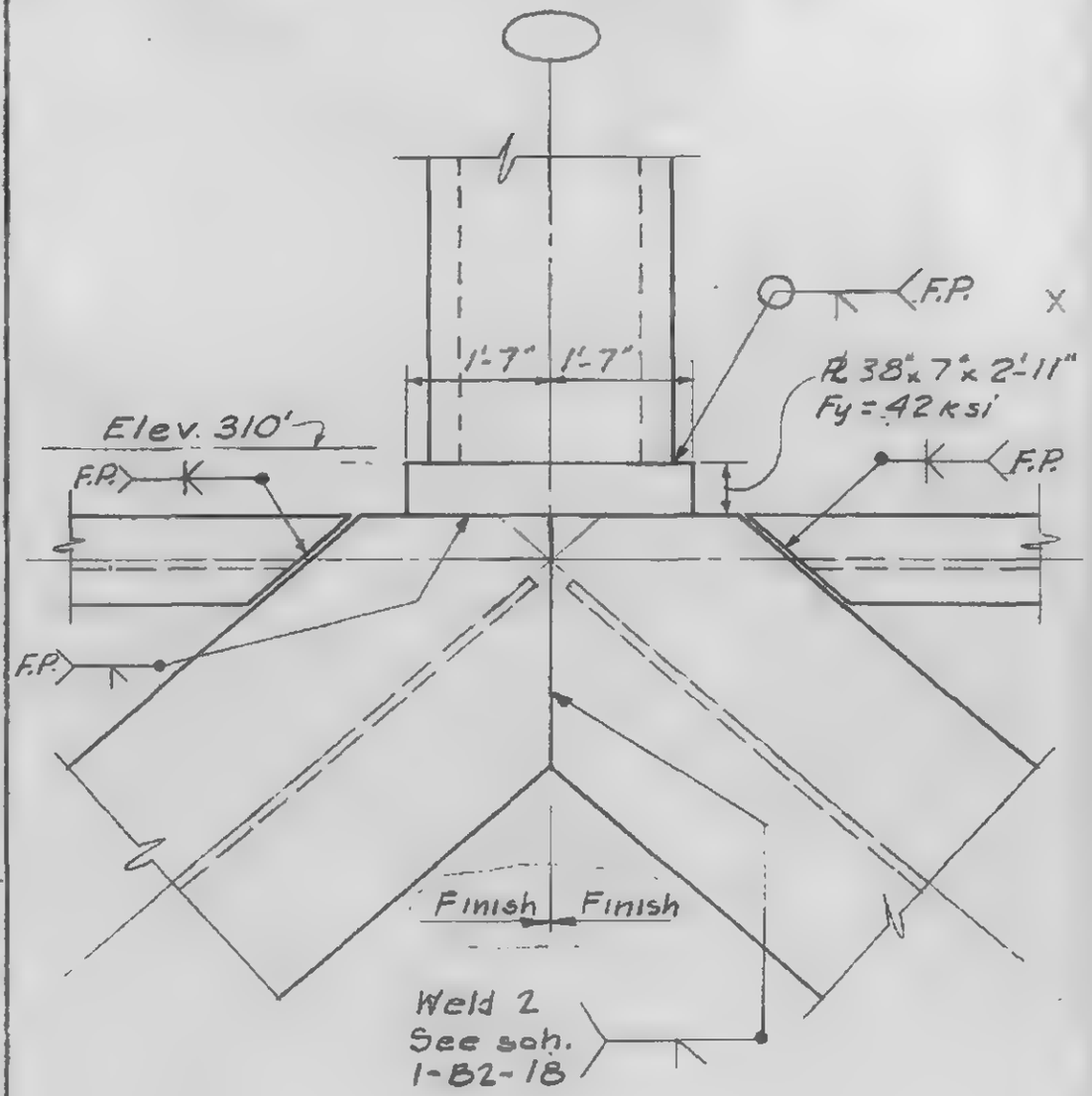

Detail 93

LICENSED PROFESSIONAL ENGINEER
LESLIE E. ROBERTSON
No. 34360
UNIVERSITY OF THE STATE OF NEW YORK

1-B2-97

WORTHINGTON, SKILLING, HELLE & JACKSON — Civil & Structural Engineers

PROJECT: THE WORLD TRADE CENTER | TITLE: EXTERIOR WALL TO EL. 363' - DETAILS 94, 95, 96 & 97 | DATE: 3-31-67

REVISIONS

4-24-67

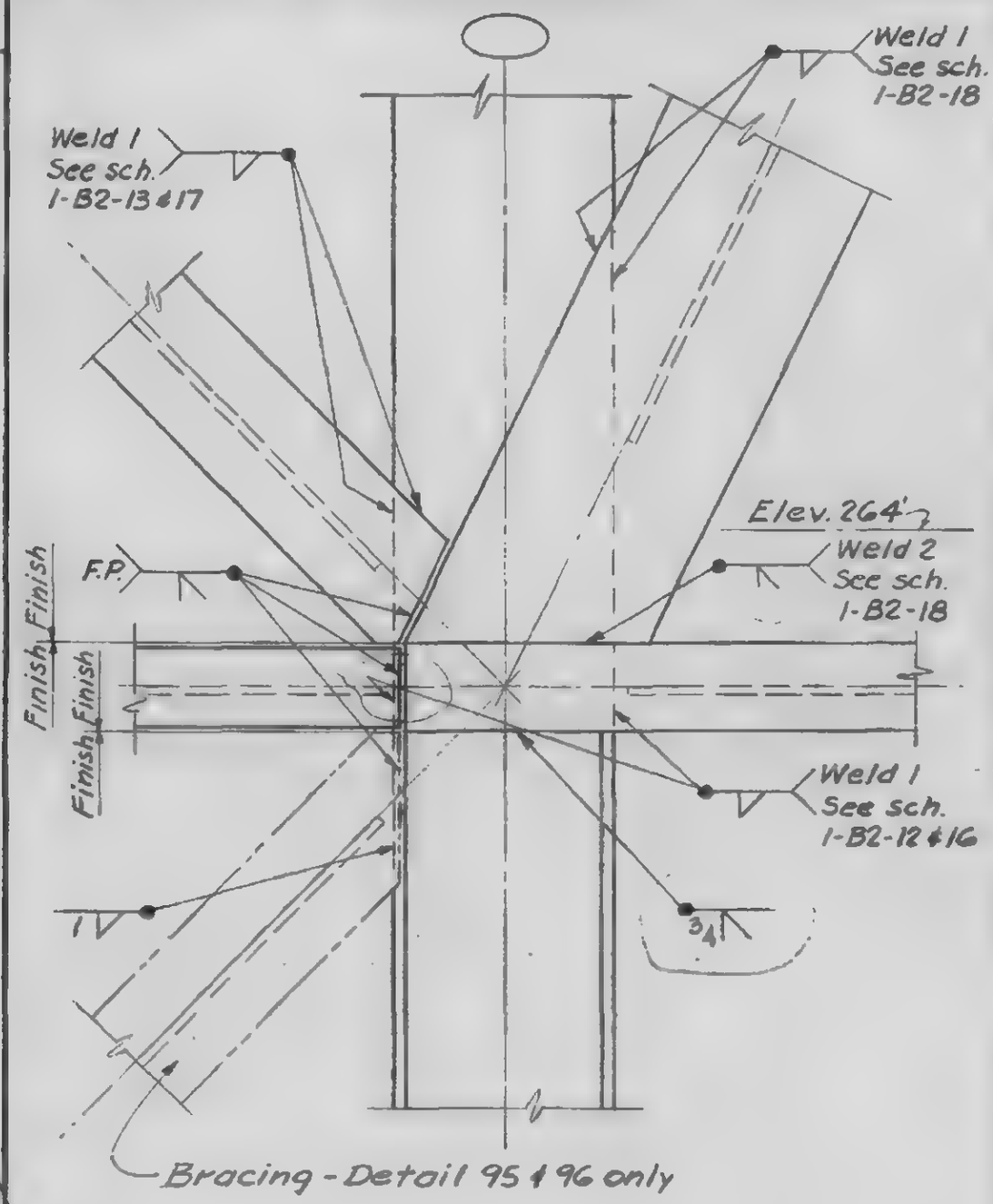

Detail 94

Detail 95 as noted

Detail 96 opp. hand & as noted

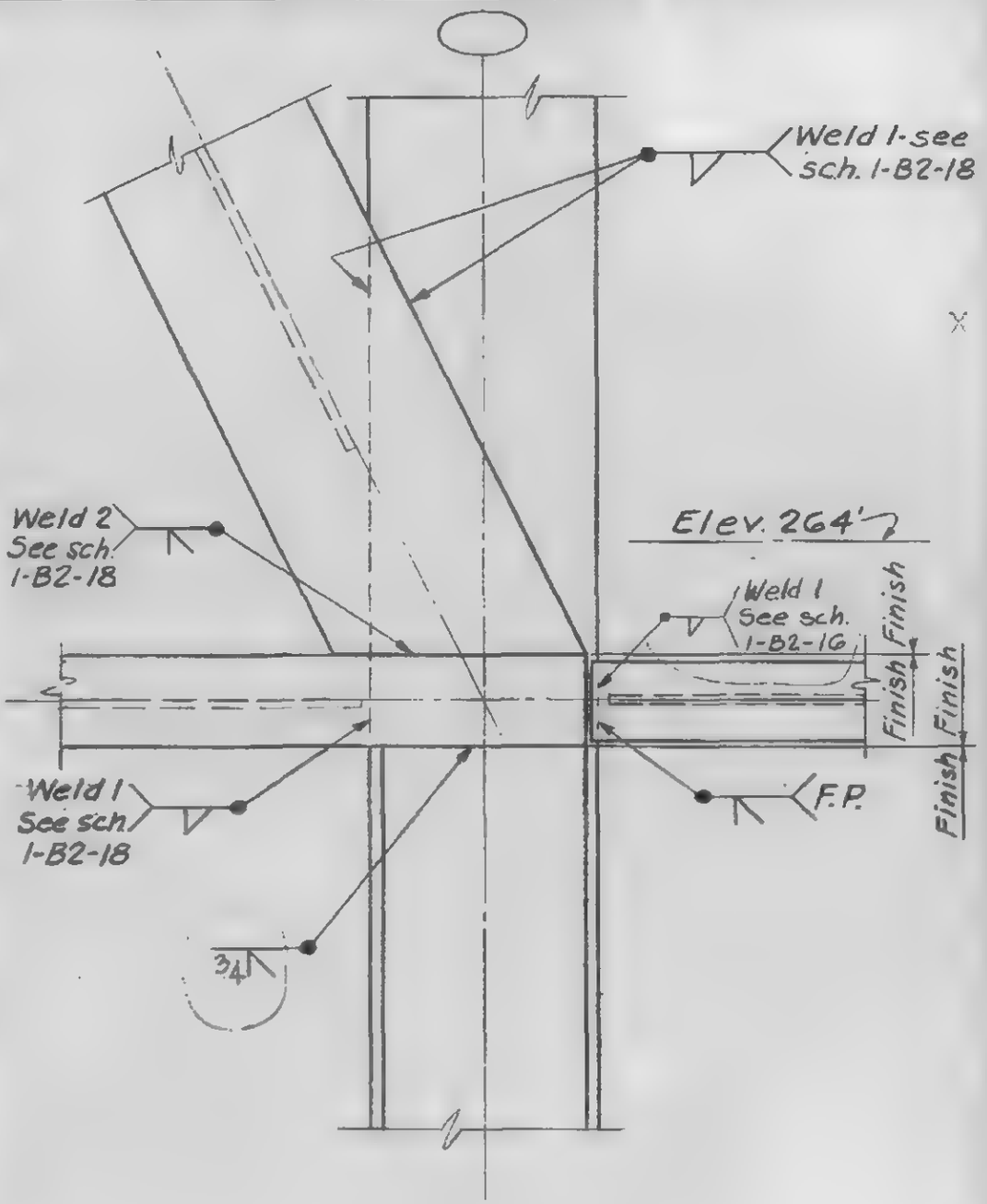

Detail 97

LICENSED PROFESSIONAL ENGINEER
LESLIE E. ROBERTSON
No. 34360
UNIVERSITY OF THE STATE OF NEW YORK

1-B2-98

WORTHINGTON, SKILLING, HELLE & JACKSON — Civil & Structural Engineers

PROJECT THE WORLD TRADE CENTER | TITLE EXT. WALL TO EL. 363'-DETAIL 98,99,100 | DATE 3-31-67

REVISIONS

4-24-67

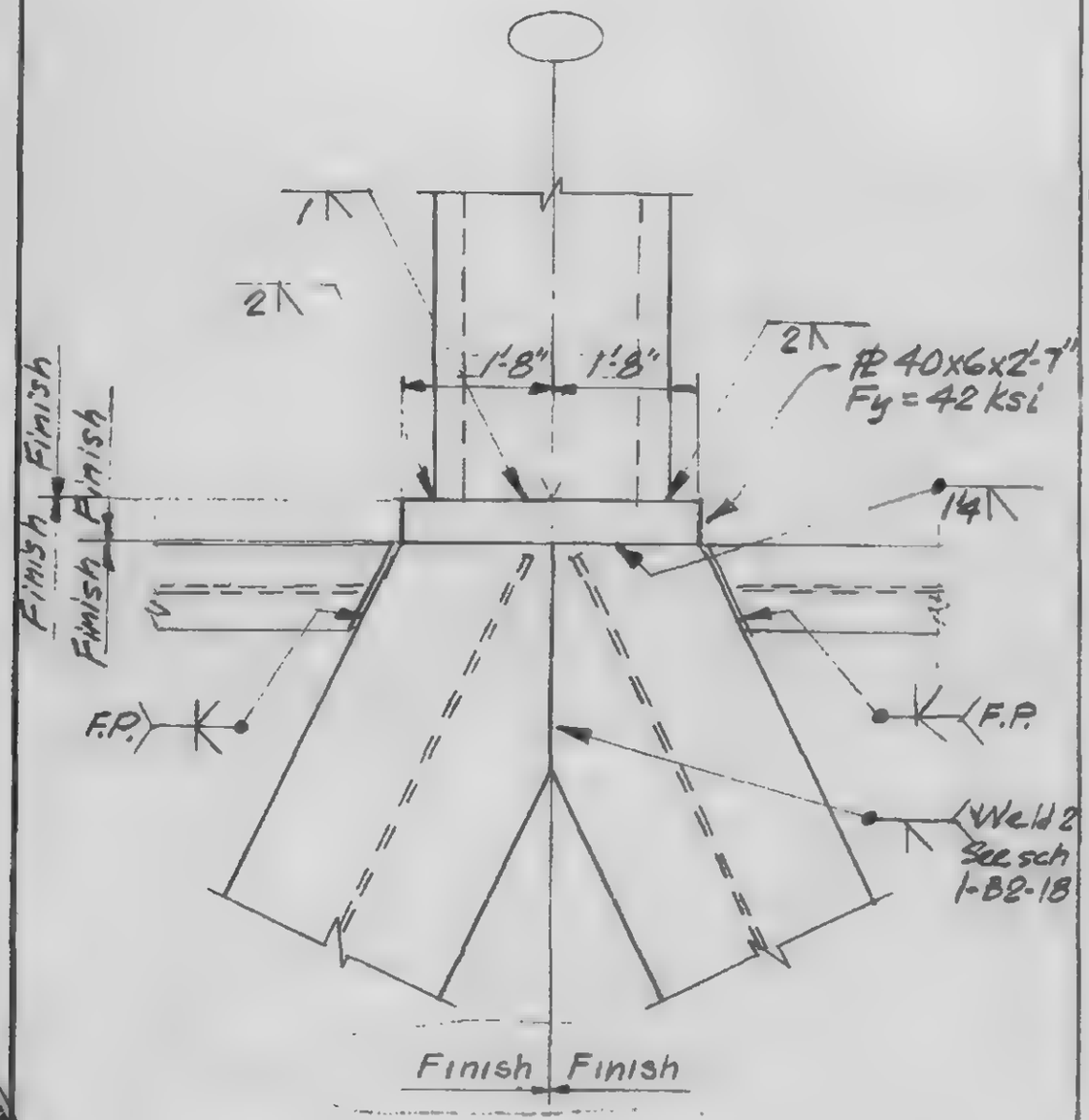

Detail 98

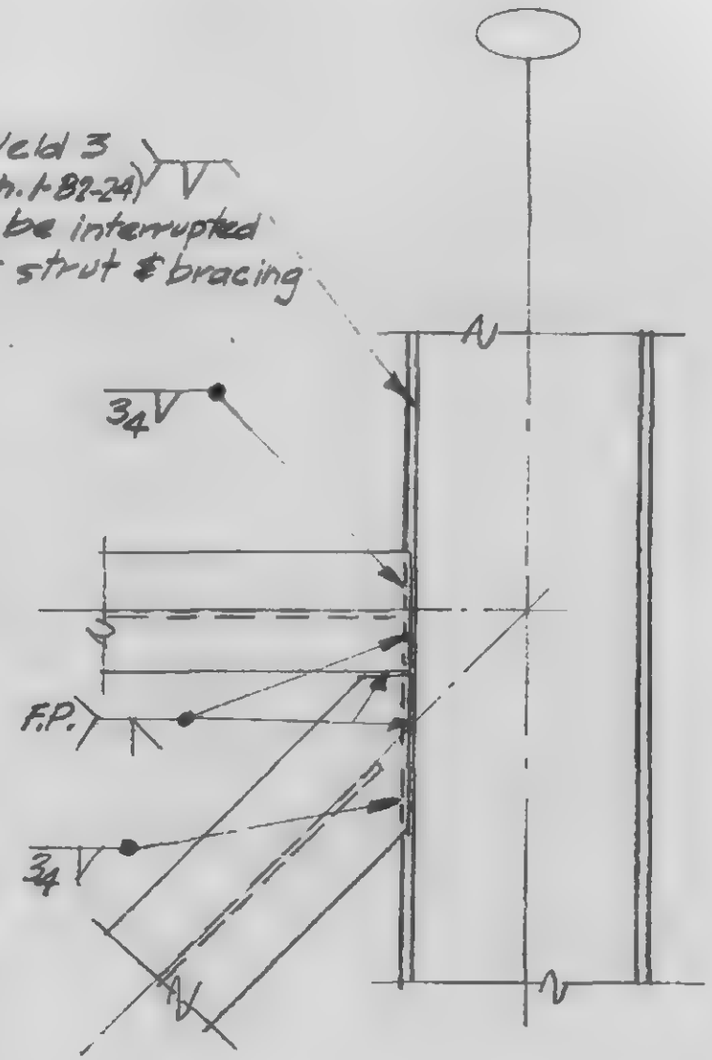

Detail 99

Detail 100 opp. hand

LICENSED PROFESSIONAL ENGINEER
LESLIE E. ROBERTSON
No. 34960
UNIVERSITY OF THE STATE OF NEW YORK

1-B2-99

WORTHINGTON, SKILLING, HELLE & JACKSON — Civil & Structural Engineers

PROJECT: THE WORLD TRADE CENTER | TITLE: EXTERIOR WALL TO El. 363' - SPANDREL TYPE C | DATE: 5-8-67

REVISIONS

2-15-68

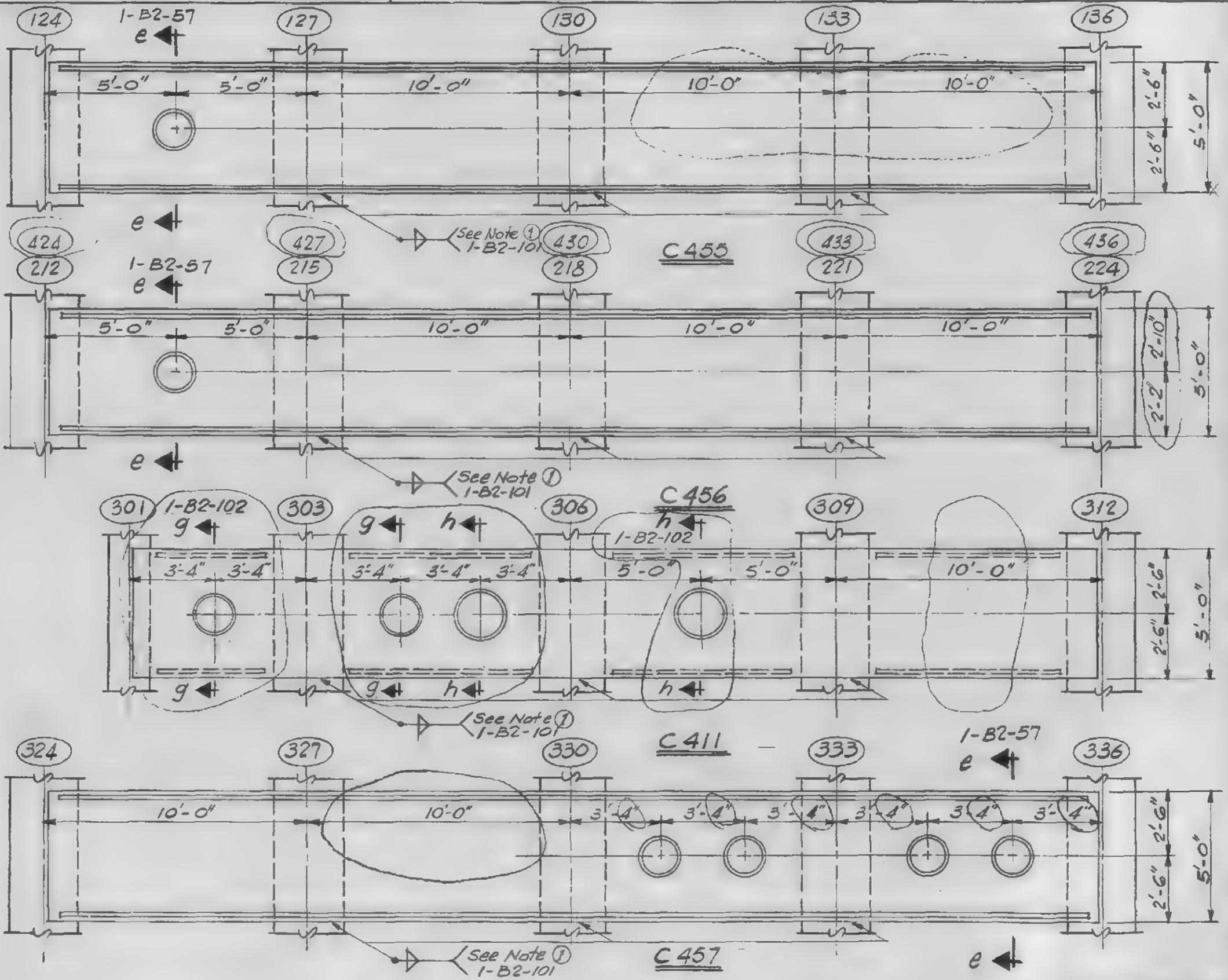

LICENSED PROFESSIONAL ENGINEER
LESLIE E. ROBERTSON
No. 34360
UNIVERSITY OF THE STATE OF NEW YORK

Elevations for Spandrel Types C455, C456, C411 & C457

1-B2-100

WORTHINGTON, SKILLING, HELLE & JACKSON — Civil & Structural Engineers

PROJECT THE WORLD TRADE CENTER | TITLE EXTERIOR WALL TO El. 363' SPANDREL TYPE C | DATE 5-8-67

REVISIONS

2-15-68

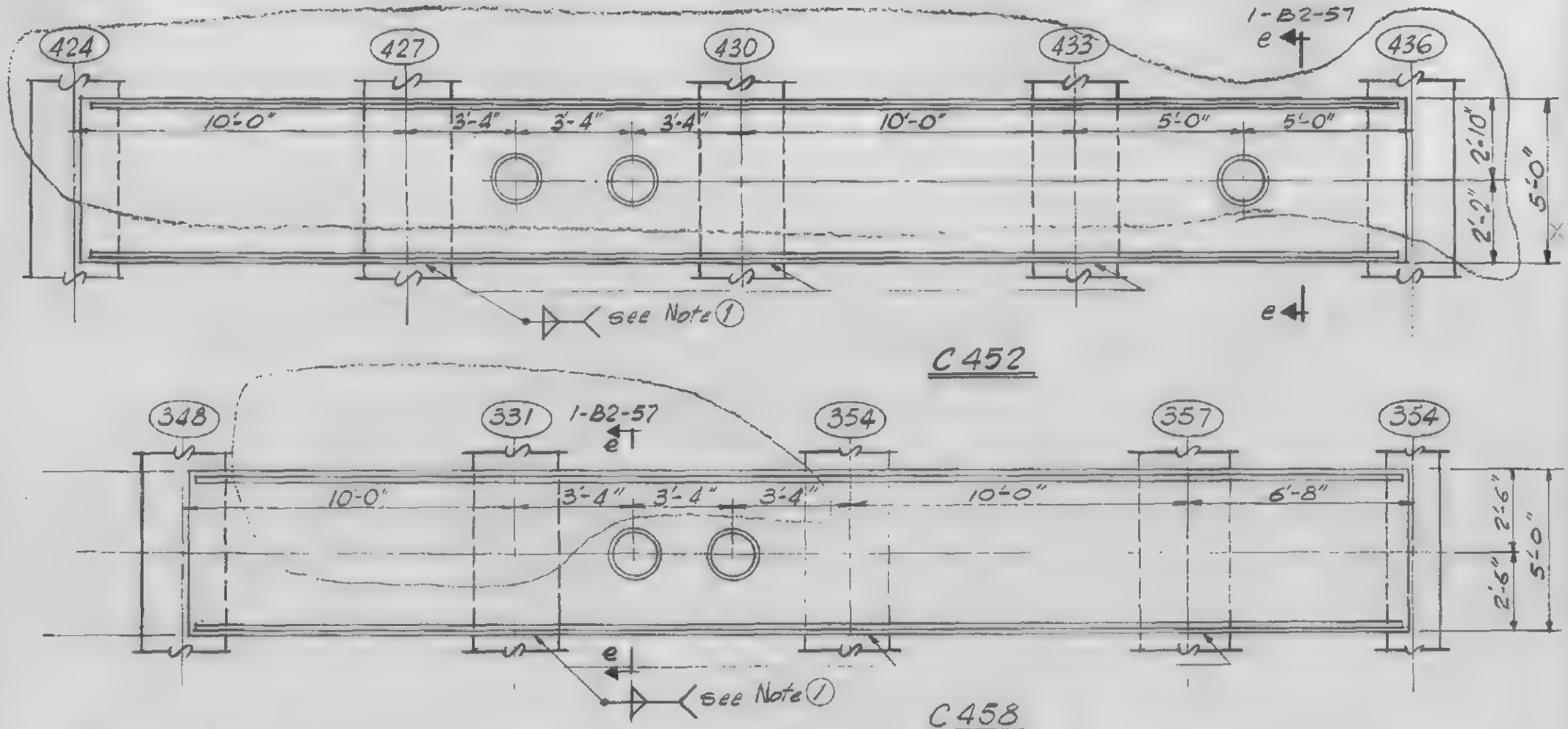

C452

C458

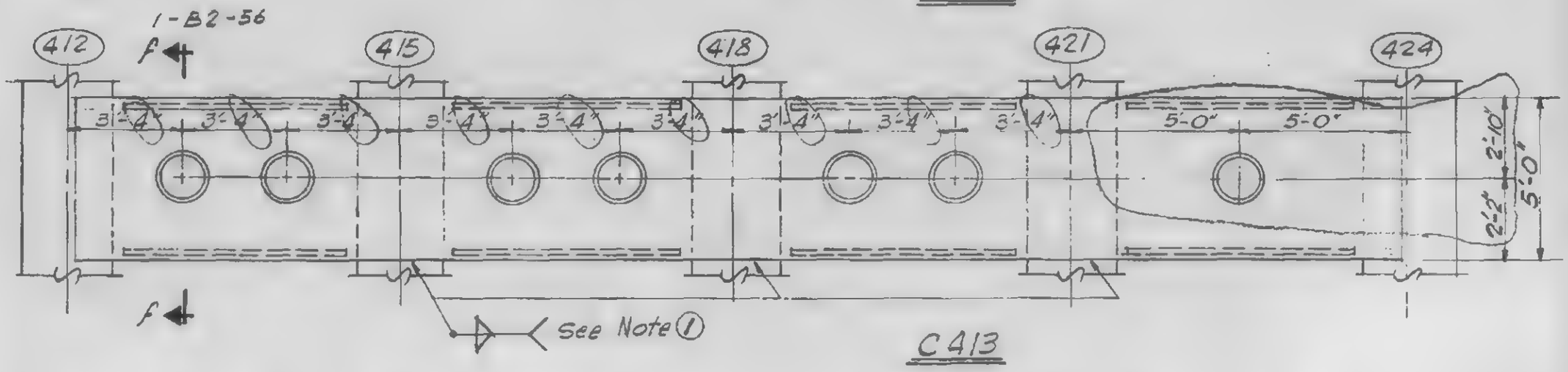

C413

Note (1): a) Use weld 1 (See sch. 1-B2-10, 12, 14, & 16) when weld 1 ≤ 15/16"
b) Use 15/16" when weld 1 > 15/16"

Elevations for spandrel types C452, C458 & C413

1-B2-101

LICENSED PROFESSIONAL ENGINEER — LESLIE E. ROBERTSON — No. 34360 — THE STATE OF NEW YORK

SKILLING - HELLE - CHRISTIANSEN - ROBERTSON Structural & Civil Engineers

PROJECT THE WORLD TRADE CENTER | TITLE EXTERIOR WALL TO EL 363' SPANDREL TYPE C | DATE 2-15-68

REVISIONS

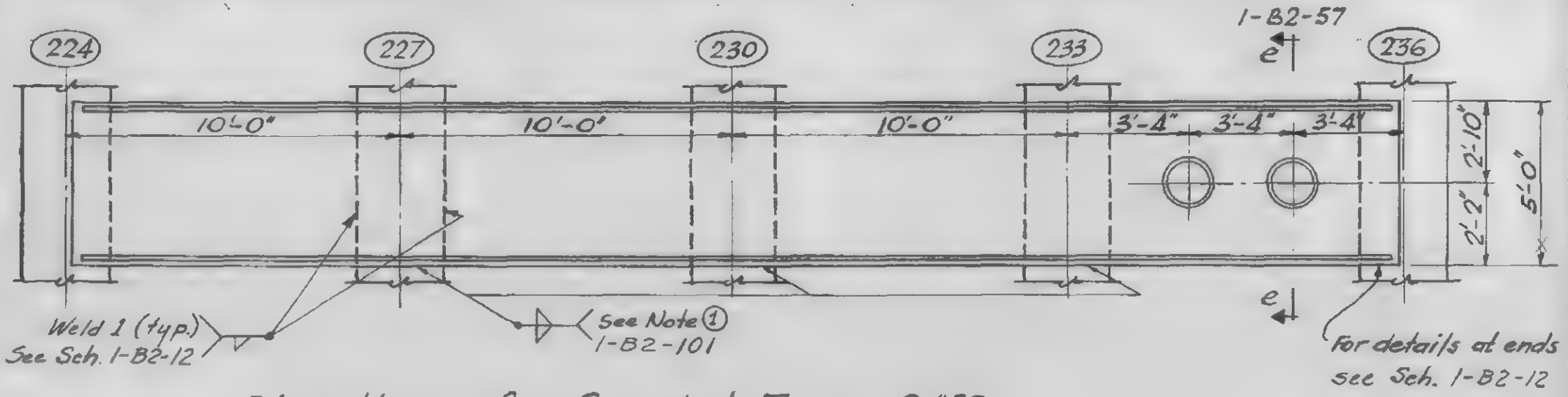

Elevation for Spandrel Type C459

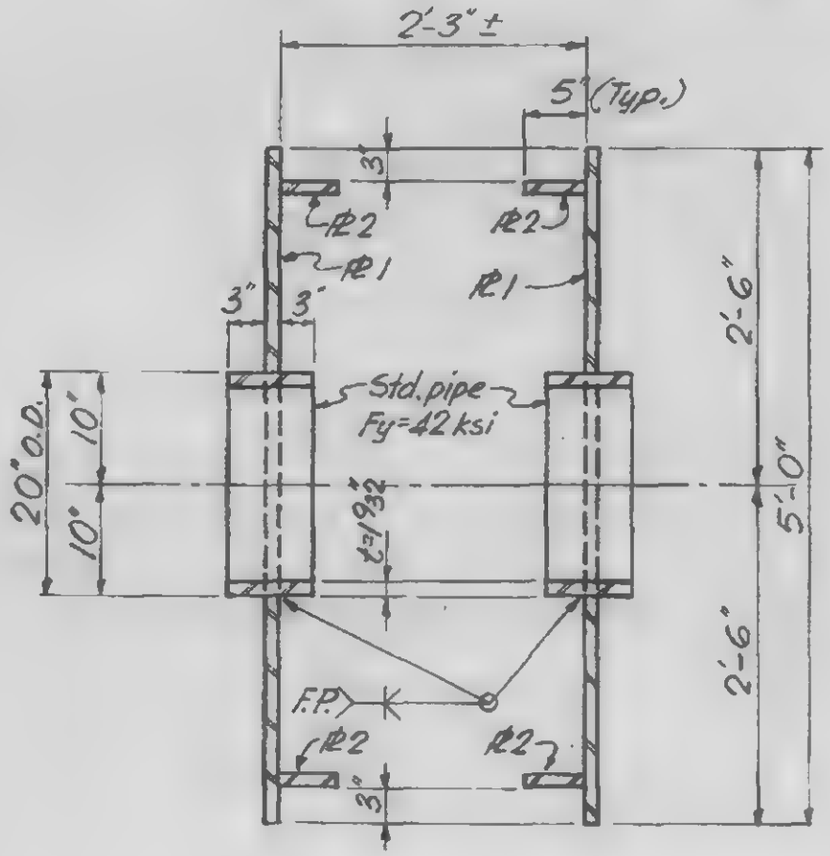

Section g-g

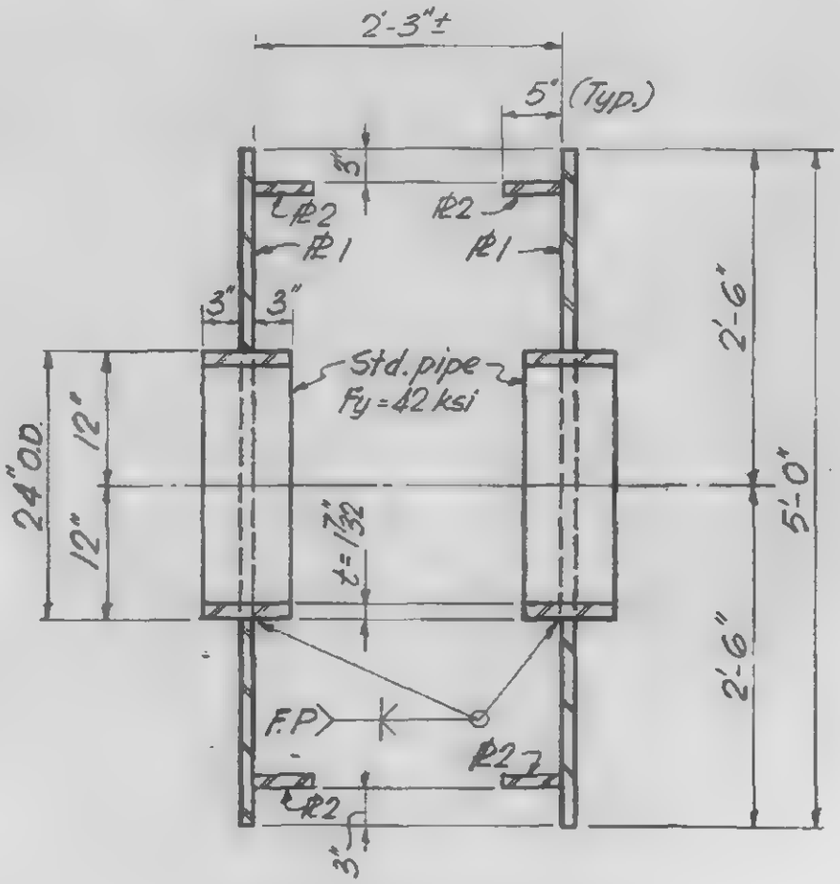

Section h-h

Note: For #1 and #2
See 1-B2-56

LICENSED PROFESSIONAL ENGINEER
LESLIE E. ROBERTSON
No. 34360
UNIVERSITY OF THE STATE OF

1-B2-102

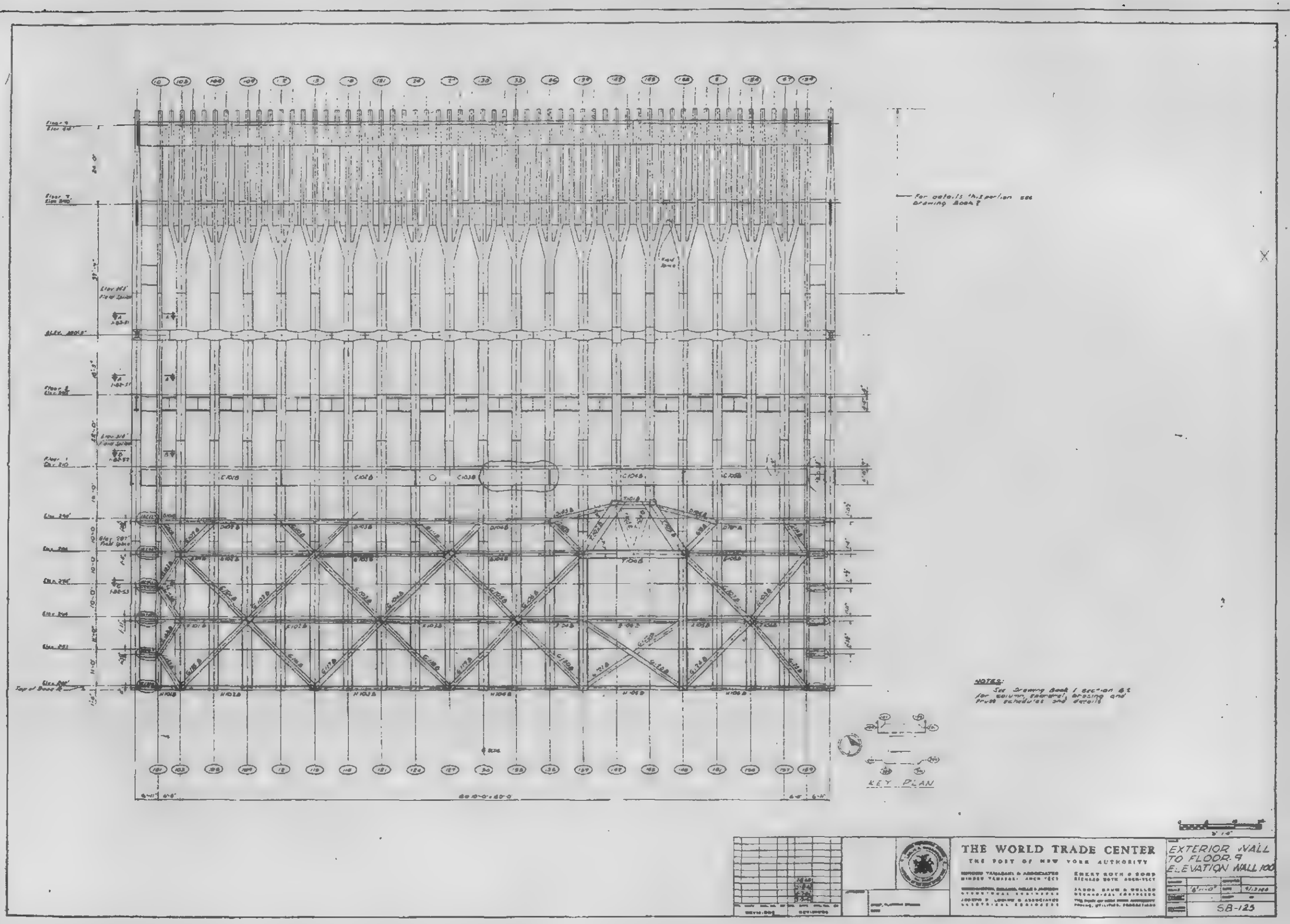
For details this portion see Drawing Book 2
NOTES:
See Drawing Book 1 section B2 for column, spandrel, bracing and truss schedules and details
KEY PLAN
THE WORLD TRADE CENTER
THE PORT OF NEW YORK AUTHORITY
EXTERIOR WALL TO FLOOR 9 ELEVATION WALL 100
SB-125

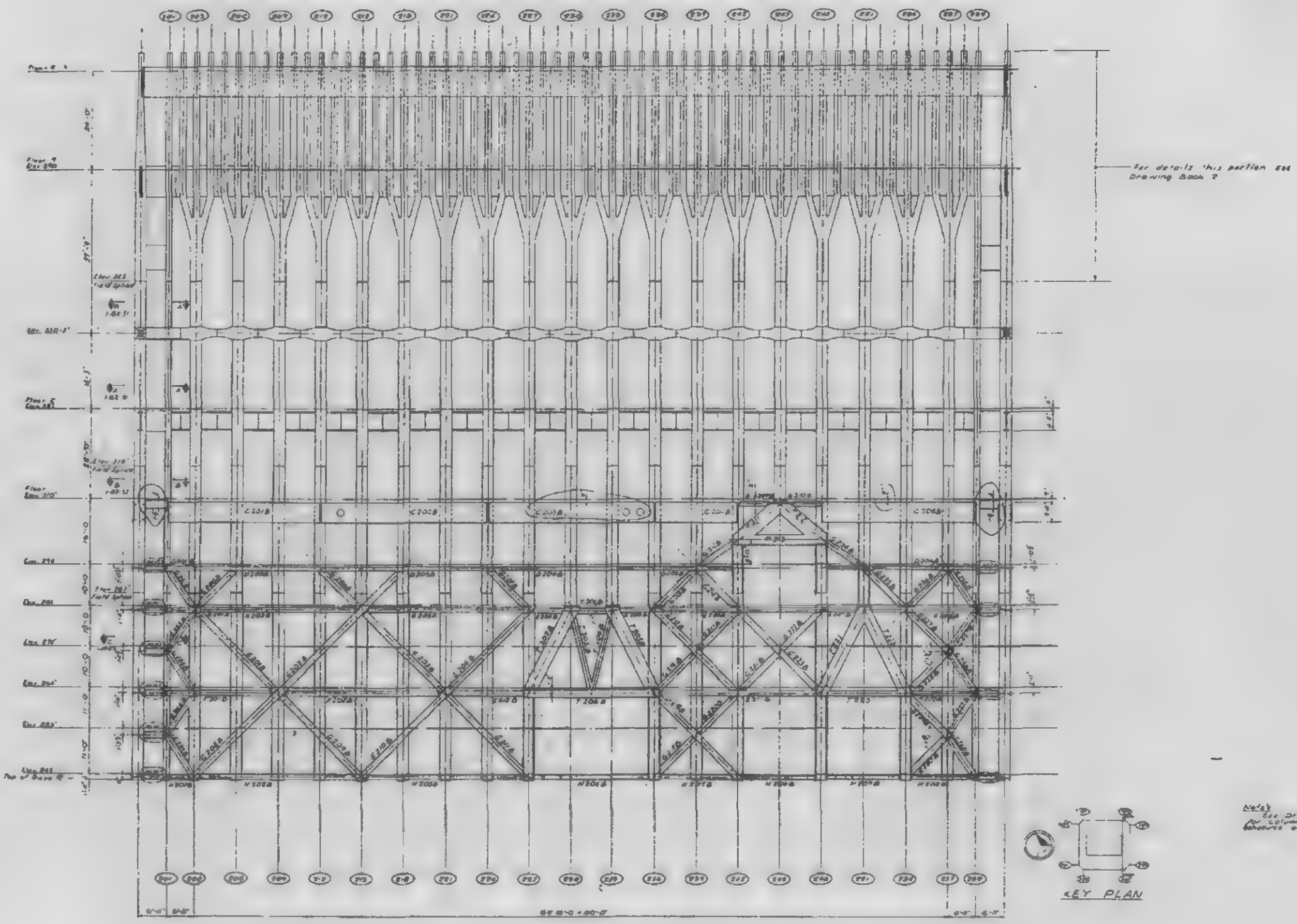

Note:
See Drawing Book 1 Section 31 for column, spandrel, bracing and truss schedules and details

THE WORLD TRADE CENTER
THE PORT OF NEW YORK AUTHORITY

EXTERIOR WALL TO FLOOR 9 ELEVATION WALL 200

SB-126

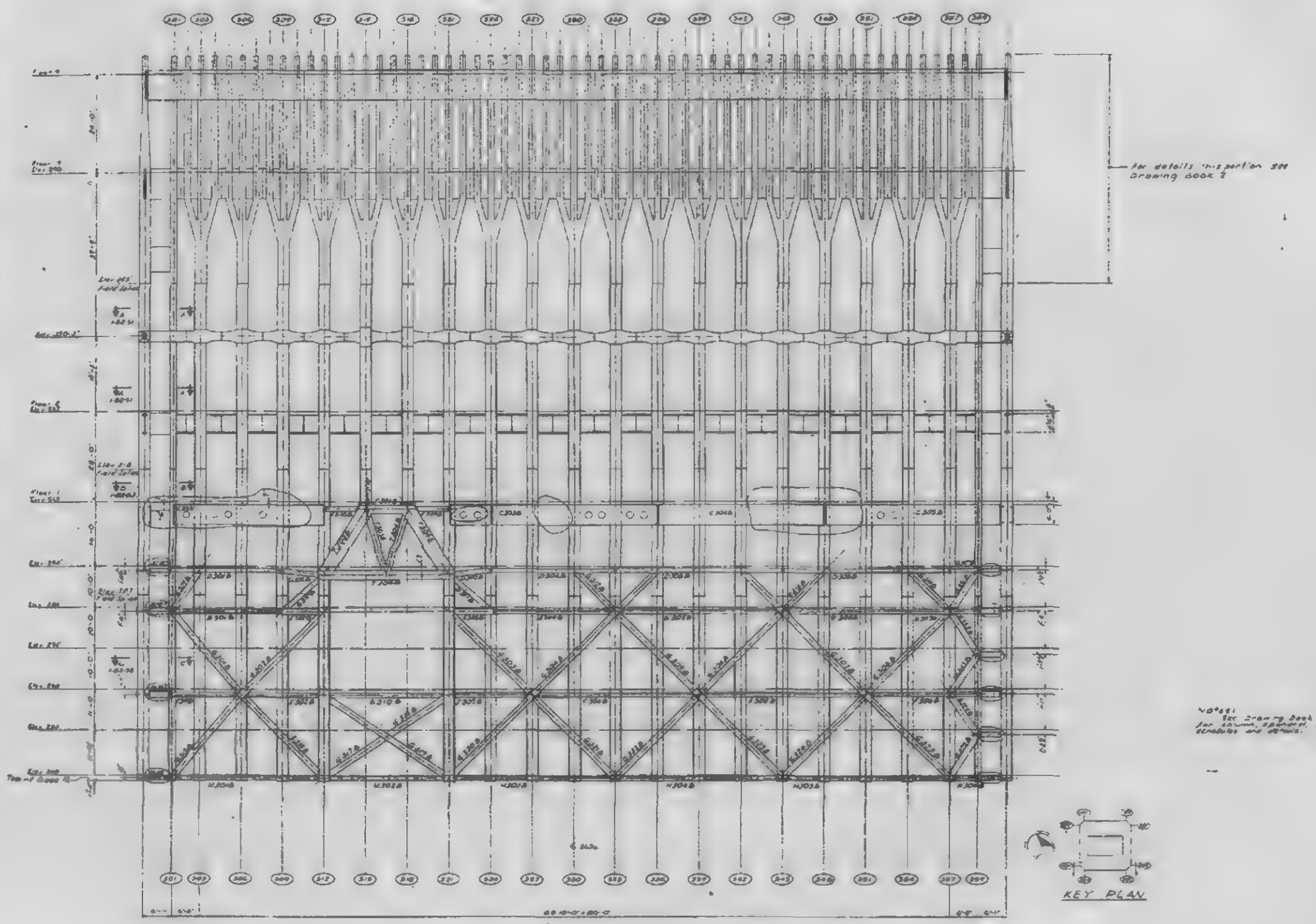

Notes:
See Drawing Book 1, Section B-3 for column, spandrel, bracing & truss schedules and details.

THE WORLD TRADE CENTER
THE PORT OF NEW YORK AUTHORITY

EXTERIOR WALL
TO FLOOR 9
ELEVATION WALL 300

SB-127

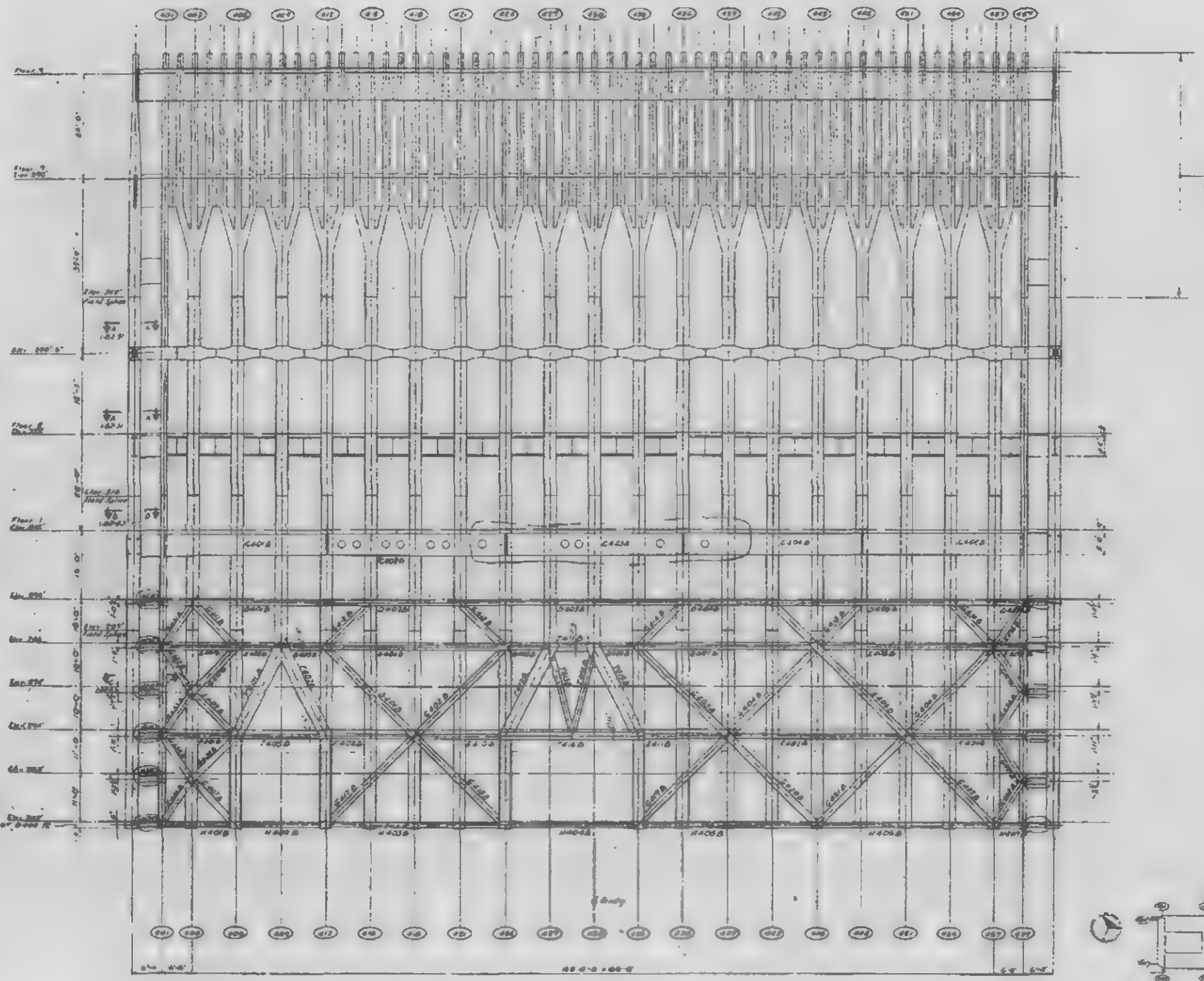

For detail this section see Drawing Sheet 2

NOTES
See Drawing Sheet 1, Section B2 for column, spandrel, bracing and truss schedules and data.

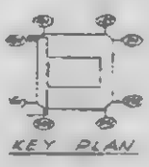

KEY PLAN

THE WORLD TRADE CENTER
THE PORT OF NEW YORK AUTHORITY

EXTERIOR WALL TO FLOOR 9 ELEVATION WALL 100

SB-128

SKILLING, HELLE, CHRISTIANSEN, ROBERTSON — Structural & Civil Engineers

PROJECT	TITLE	DATE
THE WORLD TRADE CENTER	DRAWING BOOK 1 - EXTERIOR WALL TO EL. 363	4/ 1/69

REVISIONS
Printed 5-1-69

1-AB3- 0	INDEX	1-AB3-38	DETAIL 774
1-AB3- 1	DETAIL 733	1-AB3-39	DETAIL 775
1-AB3- 2	DETAIL 734	1-AB3-40	DETAIL 777
1-AB3- 3	DETAIL 735	1-AB3-41	DETAIL 778
1-AB3- 4	DETAIL 736	1-AB3-42	DETAIL 779
1-AB3- 4.1	DETAIL 736	1-AB3-43	DETAIL 780
1-AB3- 5	DETAIL 737	1-AB3-44	DETAIL 781
1-AB3- 6	DETAIL 738	1-AB3-45	DETAIL 783
1-AB3- 7	DETAIL 750	1-AB3-49	GENERAL NOTES
1-AB3- 8	DETAIL 751	1-AB3-50	DETAIL P01
1-AB3- 8.1	DETAIL 751	1-AB3-51	DETAIL P02
1-AB3- 9	DETAIL 752,757,760	1-AB3-52	DETAIL P03
1-AB3- 9.1	DETAIL 752,757,760	1-AB3-53	DETAIL P04
1-AB3-10	DETAIL 753	1-AB3-54	DETAIL P05
1-AB3-11	DETAIL 754	1-AB3-55	DETAIL P06
1-AB3-12	DETAIL 755	1-AB3-56	DETAIL P07
1-AB3-13	DETAIL 756	1-AB3-57	DETAIL P08
1-AB3-14	DETAIL 758	1-AB3-58	DETAIL P09
1-AB3-15	DETAIL 759,765,769	1-AB3-58.1	DETAIL P09
1-AB3-16	DETAIL 761	1-AB3-58.2	DETAIL P09
1-AB3-17	DETAIL 766	1-AB3-59	NOT USED
1-AB3-18	DETAIL 767,768,770	1-AB3-60	DETAIL P10-P17
1-AB3-18.1	DETAIL 767,768,770	1-AB3-60.1	DETAIL P10-P17-P20
1-AB3-18.2	DETAIL 771	1-AB3-60.2	DETAIL P10-P17
1-AB3-19	DETAIL 839	1-AB3-60.3	DETAIL P10-P17
1-AB3-20	DETAIL 840	1-AB3-60.4	DETAIL P20
1-AB3-21	DETAIL 841	1-AB3-60.5	DETAIL P10,P11
1-AB3-22	DETAIL 842	1-AB3-60.6	DETAIL P10,P11
1-AB3-22.1	DETAIL 842	1-AB3-60.7	DETAIL P18
1-AB3-23	DETAIL 843	1-AB3-60.8	DETAIL P18
1-AB3-24	DETAIL 844	1-AB3-60.9	DETAIL P11
1-AB3-25	DETAIL 848	1-AB3-61	DETAIL P20
1-AB3-26	DETAIL 850	1-AB3-62	DETAIL P21-P26
1-AB3-27	DETAIL 851	1-AB3-63	DETAIL P30,P31
1-AB3-27.1	DETAIL 851	1-AB3-64	DETAIL P35
1-AB3-28	DETAIL 852	1-AB3-65	DETAIL P40,P41
1-AB3-28.1	DETAIL 852	1-AB3-65.1	DETAIL P40,P41
1-AB3-28.2	DETAIL 852	1-AB3-65.2	DETAIL P40,P41
1-AB3-29	DETAIL 854	1-AB3-65.3	DETAIL P40,P41
1-AB3-30	DETAIL 855	1-AB3-66	DETAIL P42
1-AB3-30.1	DETAIL 855		
1-AB3-31	DETAIL 858		
1-AB3-32	DETAIL 861		
1-AB3-32.1	DETAIL 861		
1-AB3-33	DETAIL 867		
1-AB3-33.1	DETAIL 867		
1-AB3-34	DETAIL 870		
1-AB3-35	DETAIL 872		
1-AB3-36	DETAIL 772		
1-AB3-37	DETAIL 773		

LICENSED PROFESSIONAL ENGINEER ★ LESLIE E. ROBERTSON ★ No. 34360 ★ UNIVERSITY OF THE STATE OF NEW YORK

SKILLING - HELLE - CHRISTIANSEN + ROBERTSON — Structural & Civil Engineers

PROJECT: THE WORLD TRADE CENTER | TITLE: CONNECTION DETAIL 733 A, B, C, D | DATE: 9-1-67

REVISIONS
2-11-68 R
7-17-68

slide PL 4 x 3/8 x 1'-8" with 8-3/4"ϕ shear studs
WTC 226.00 Use only as scheduled below

SCHEDULE

	733 A&D	733 B	733 C
PLATES			
P	5/8"	3/4"	3/4"
Q	5/8"	3/4"	3/4"
DIM. A	1'-4"	1'-4"	1'-6"
DIMENSIONS			
BOLTS K	4-1 1/8"ϕ	4-7/8"ϕ	4-1 1/8"ϕ
WELD (2)	5/16	5/16	5/16

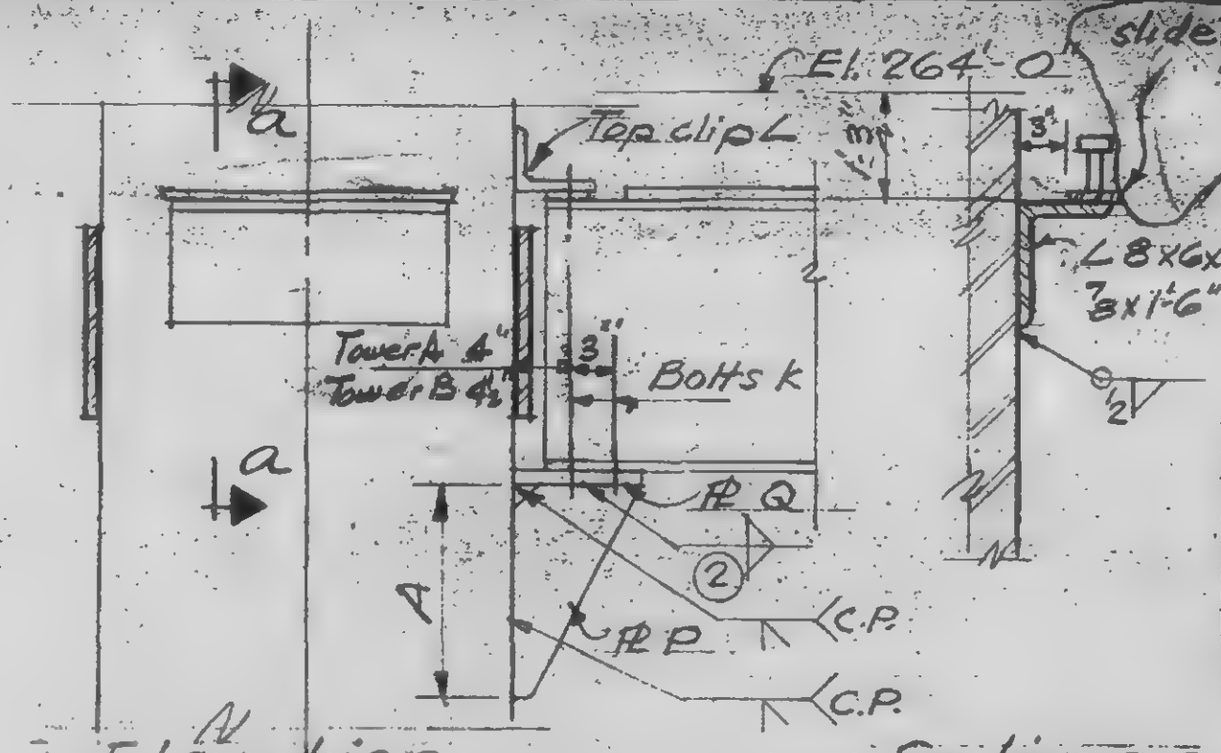

Elevation

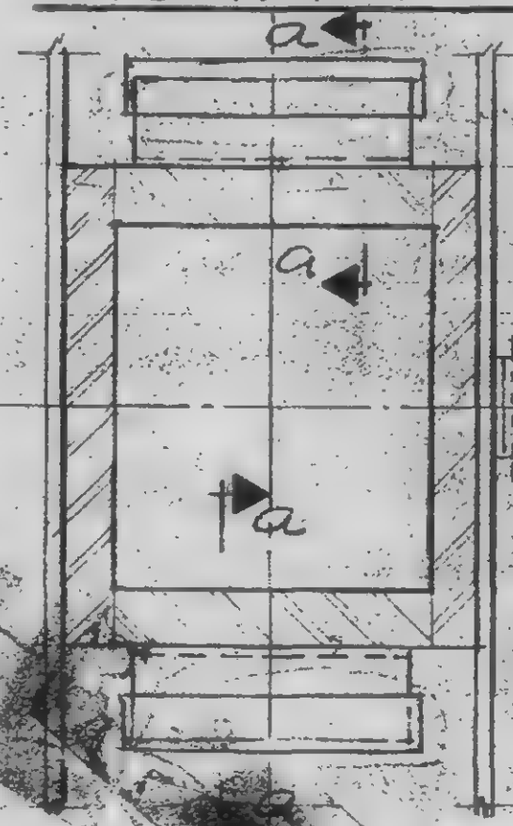

Section a-a

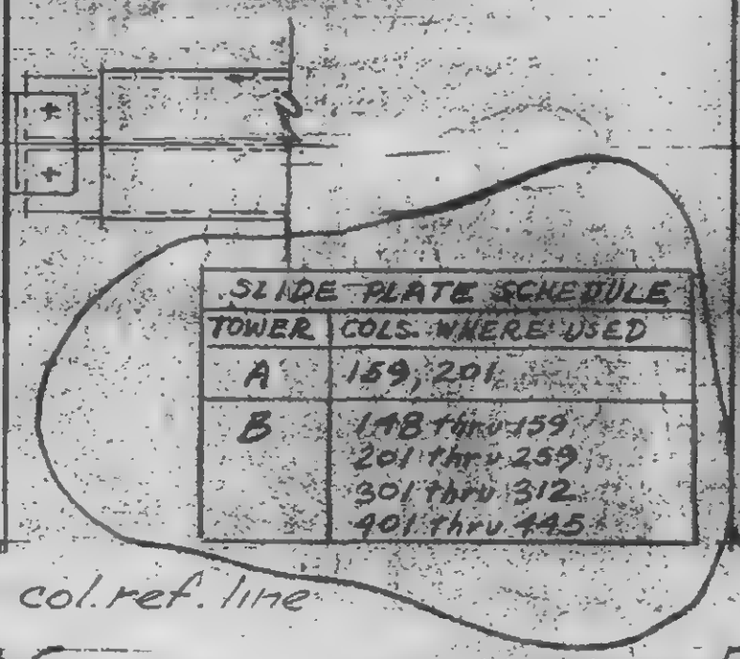

SLIDE PLATE SCHEDULE	
TOWER	COLS. WHERE USED
A	159, 201
B	148 thru 159 201 thru 259 301 thru 312 401 thru 445

Ext. col. ref. line

Plan 733 A,B,C

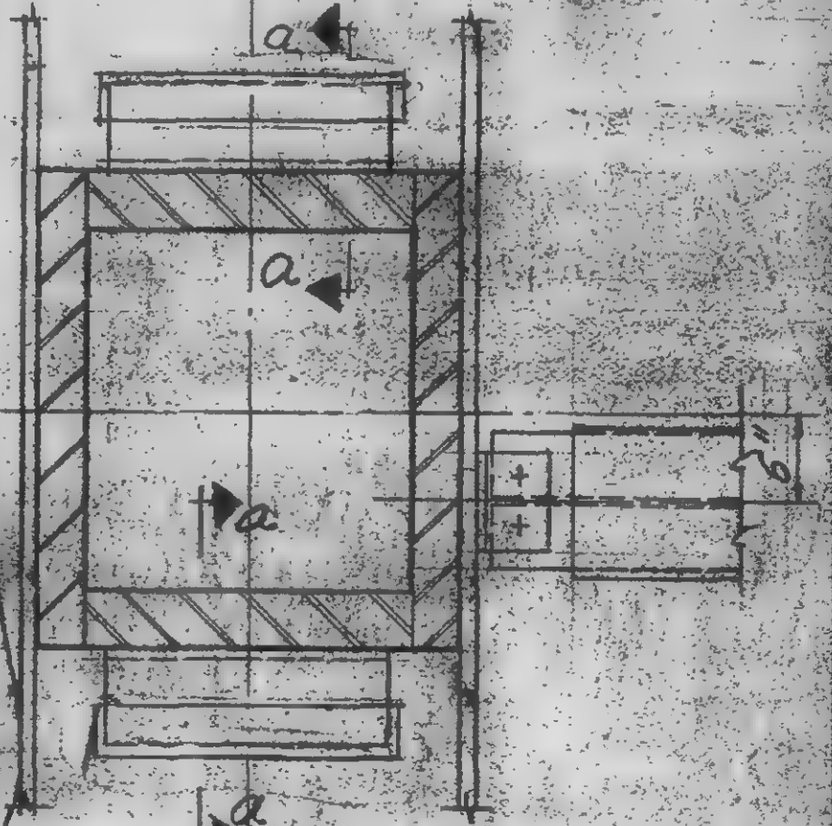

Ext. col. ref. line

Plan 733D

REGISTERED PROFESSIONAL ENGINEER
No. 34360
UNIVERSITY OF THE STATE OF

1-AB3-1

SKILLING - HELLE - CHRISTIANSEN - ROBERTSON — Structural & Civil Engineers

PROJECT THE WORLD TRADE CENTER | TITLE CONNECTION DETAIL 734 A & B | DATE 5-7-1-67

REVISIONS
2-19-68
7-17-68

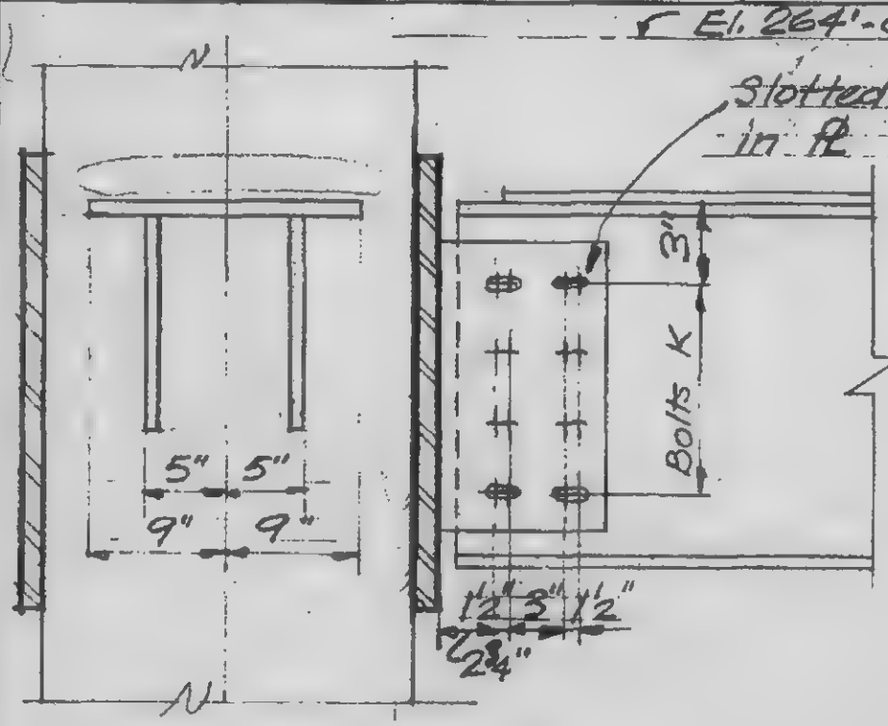

Elevation

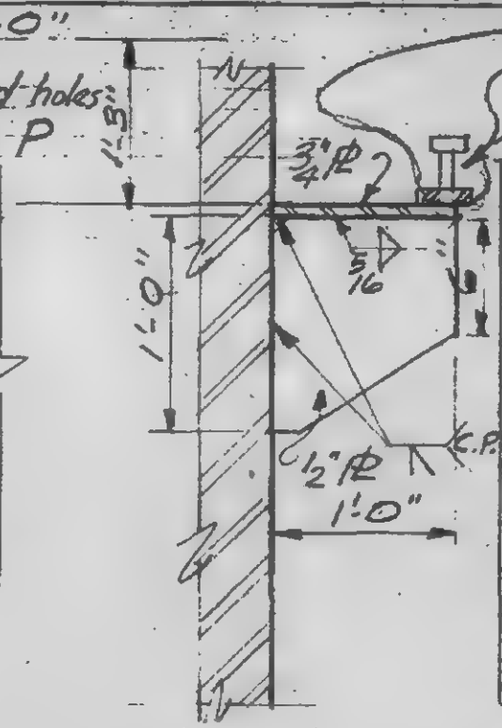

Section b-b

See 1-AB3-1 for slide ℄ schedule

SCHEDULE

	734 A	734 B
PLATES		
P	5/8"	3/4"
BOLTS		
K	8-1"ϕ	8-1⅛"ϕ
Spacing	@ 3"	@ 3⅜"

b

Exterior col. ref. line

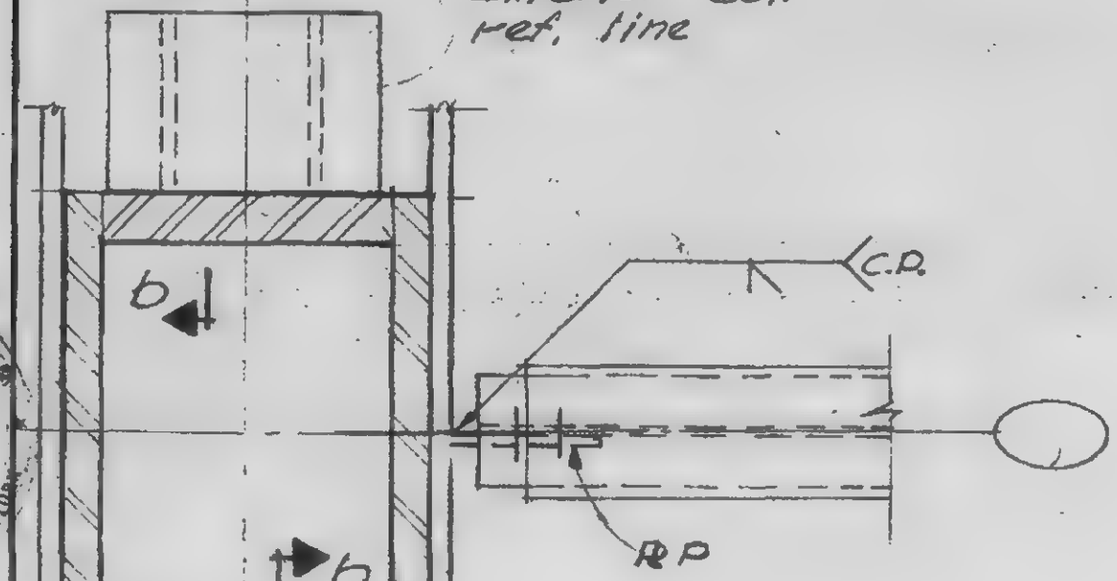

Plan

1-AB3-2

SKILLING HELLE CHRISTIANSEN ROBERTSON — Structural & Civil Engineers

PROJECT THE WORLD TRADE CENTER | TITLE CONNECTION DETAIL 735 A,B,C | DATE 9-1-67

REVISIONS

11-68 R

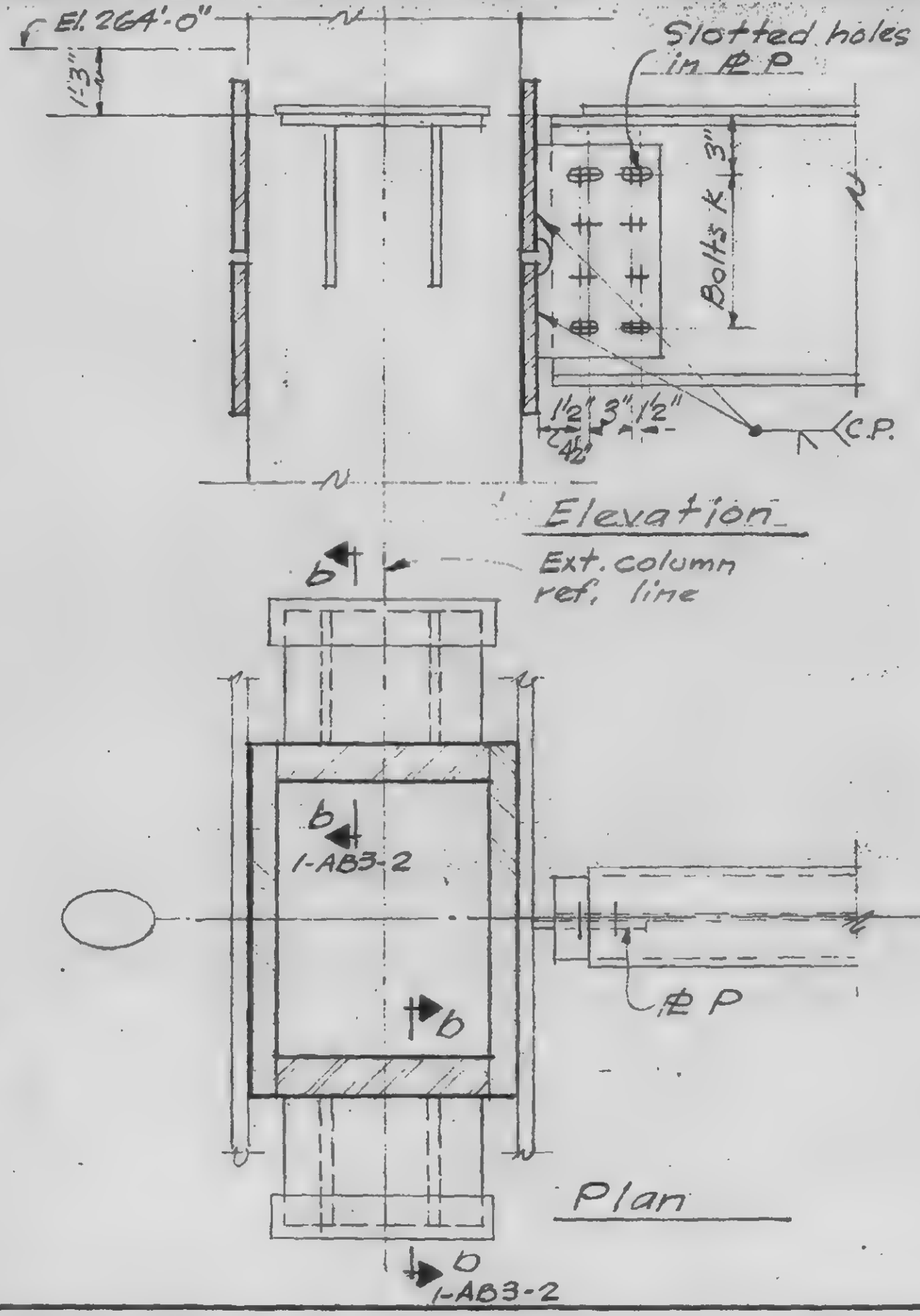

SCHEDULE			
	735 A	735 B	735 C
PLATES			
P	⅝"	¾"	⅞"
BOLTS			
K	8-1"ϕ	8-1⅛"ϕ	10-1"ϕ
Spacing	@ 3"	@ 3⅜"	@ 3"

LICENSED PROFESSIONAL ENGINEER LESLIE E. ROBERTSON UNIVERSITY OF THE STATE OF NEW YORK (NO. 34850)

1-AB3-3

SKILLING - HELLE - CHRISTIANSEN - ROBERTSON Structural & Civil Engineers

PROJECT THE WORLD TRADE CENTER | TITLE CONNECTION DETAIL 736 A - I | DATE 9-1-67

REVISIONS

2-9-68

5-7-68

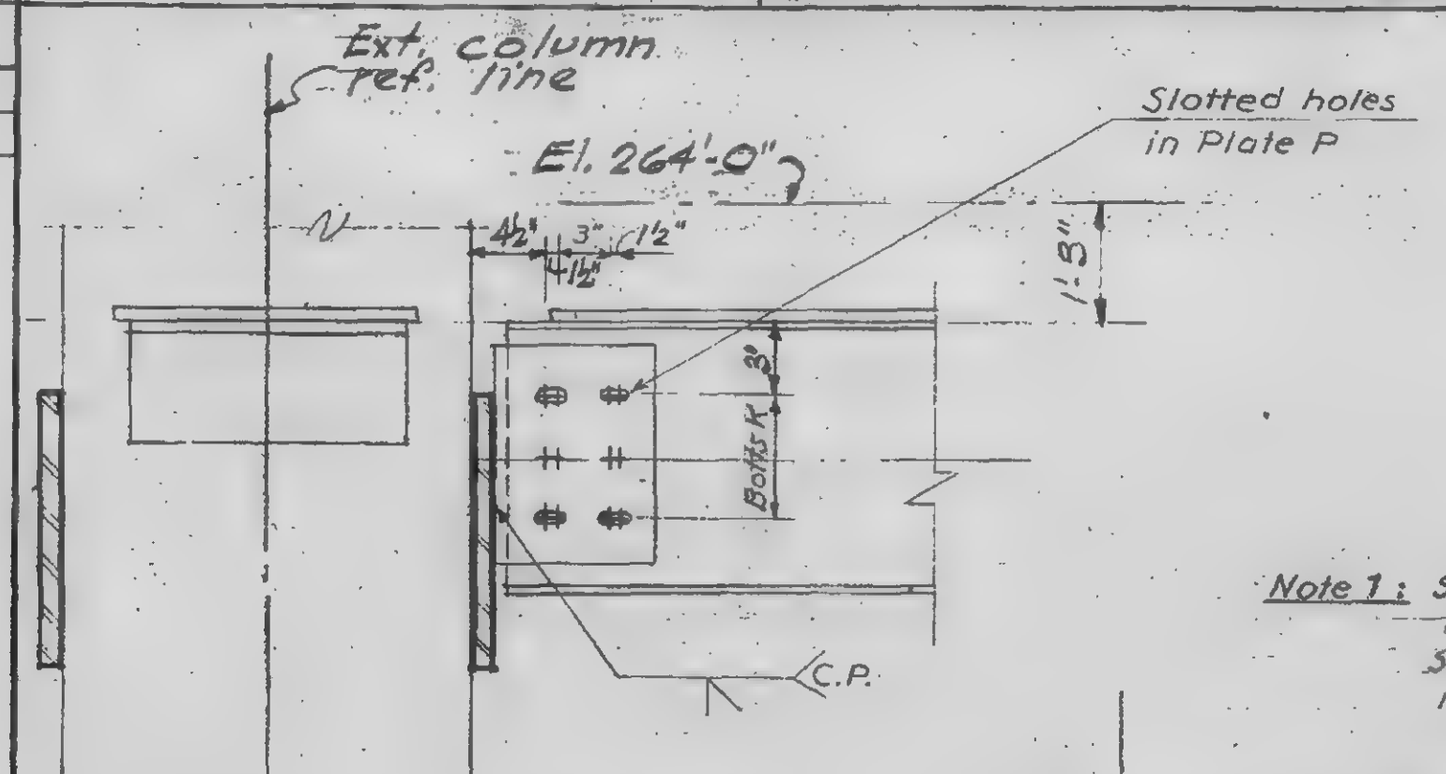

SCHEDULE			
PLATES	736 A E,G,H(2)	736 B, C, F	736 D
P	¾"	¾"	¾"
BOLTS			
K	6-1"ϕ	10-1⅛"ϕ	8-1"ϕ
Spacing	@3"	@3⅜"	@3"

Note 1 : Section a-a (1-AB3-1) where no bracing member "6"
Section b-b (1-AB3-2) at bracing members "6"

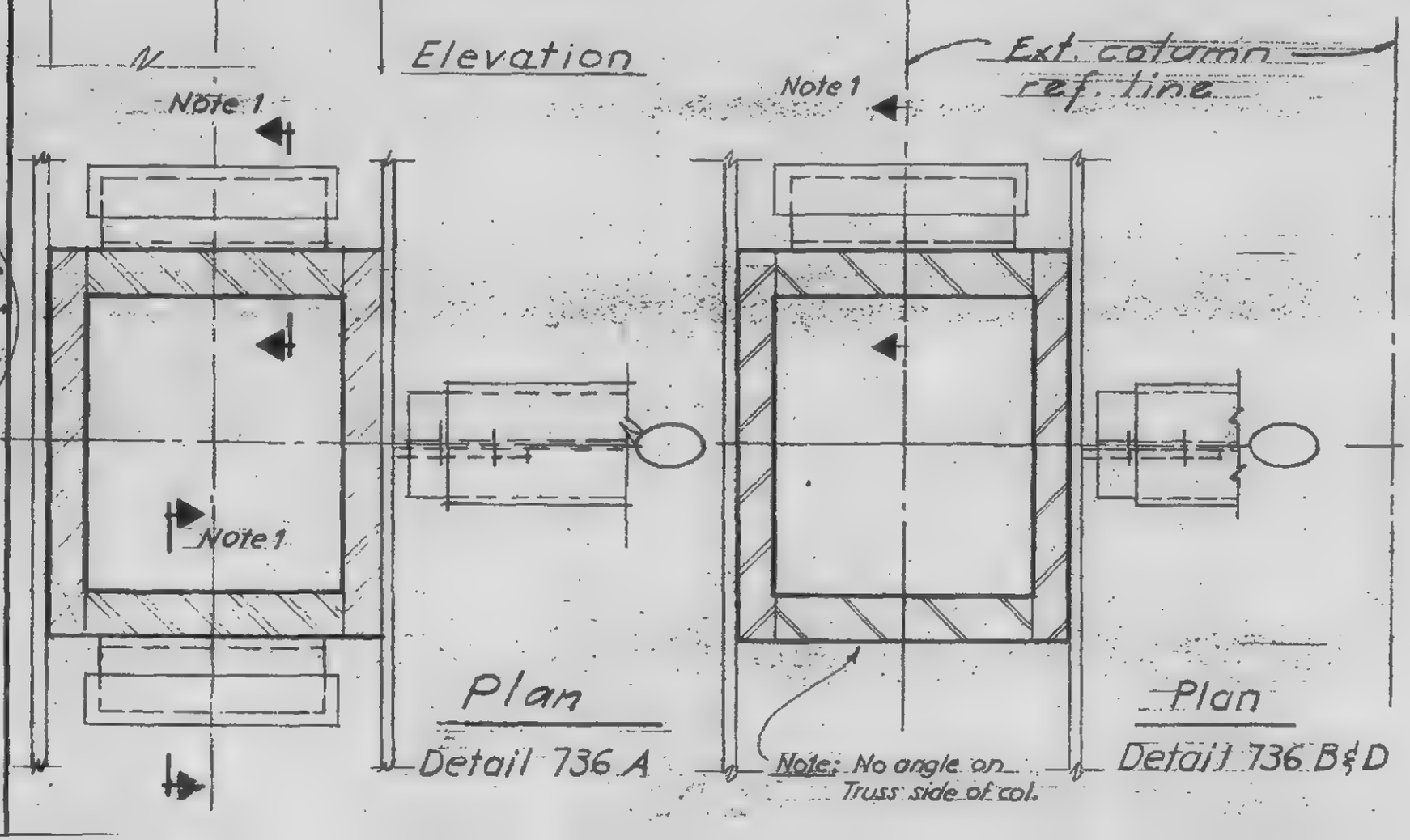

LICENSED PROFESSIONAL ENGINEER LESLIE E. ROBERTSON No. 34360 UNIVERSITY OF THE STATE OF NEW YORK

1-AB3-4

SKILLING - HELLE - CHRISTIANSEN - ROBERTSON Structural & Civil Engineers

PROJECT THE WORLD TRADE CENTER | TITLE CONNECTION DETAIL 736 E, G & H | DATE 2-19-68

REVISIONS

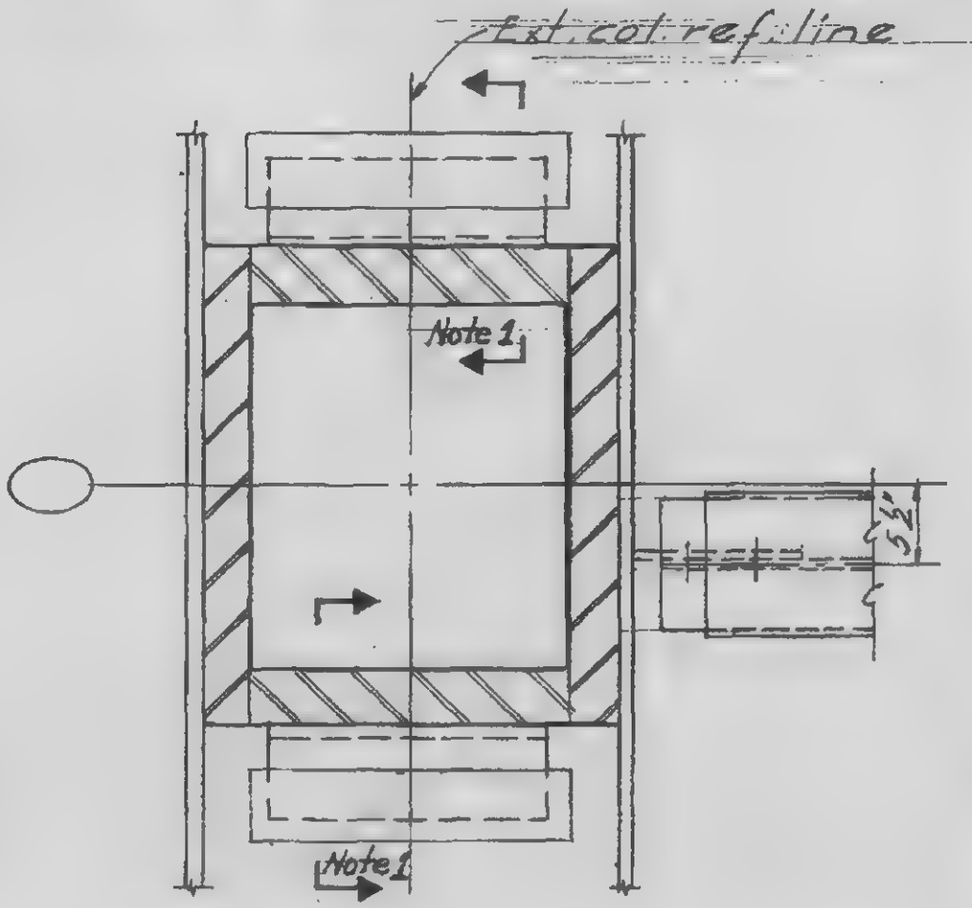

Plan
Detail 736 E

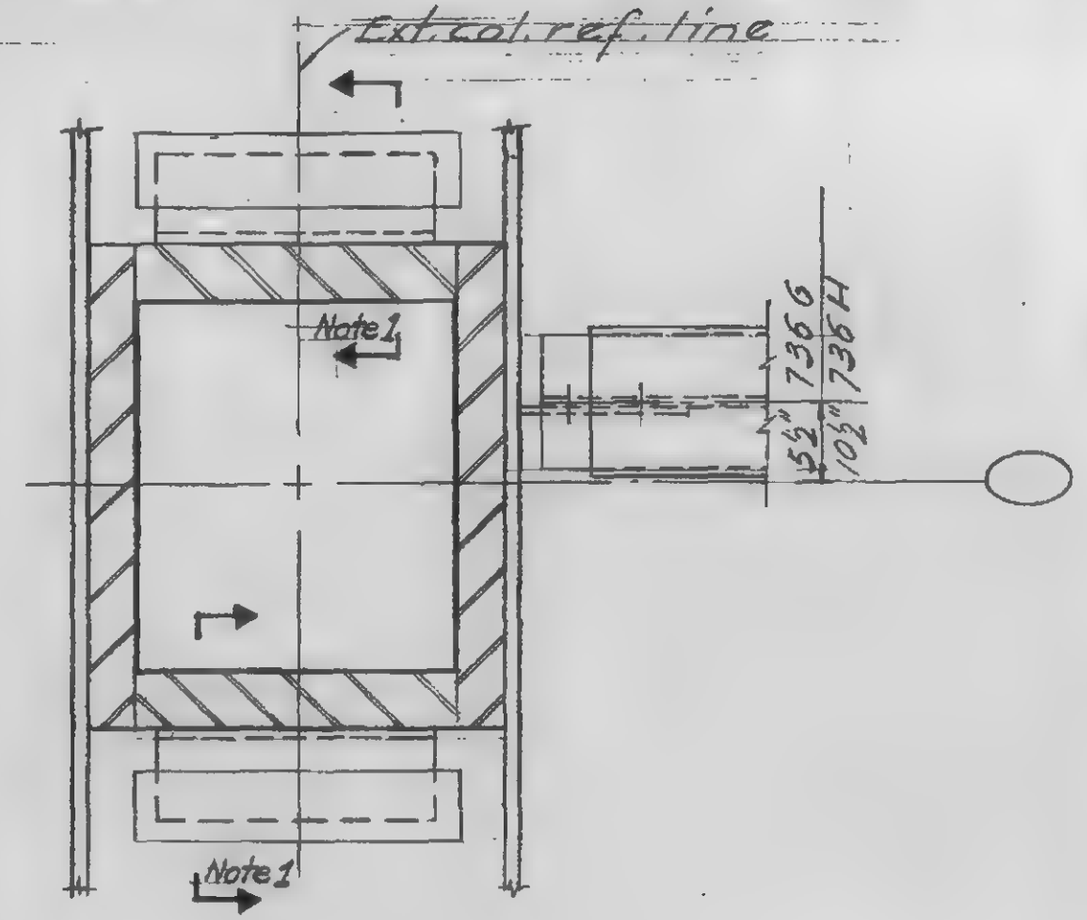

Plan
Detail 736 G & H

1-AB3-4.1

SKILLING - HELLE - CHRISTIANSEN - ROBERTSON Structural & Civil Engineers

PROJECT THE WORLD TRADE CENTER | TITLE CONNECTION DETAIL 737A | DATE 9-1-67

REVISIONS

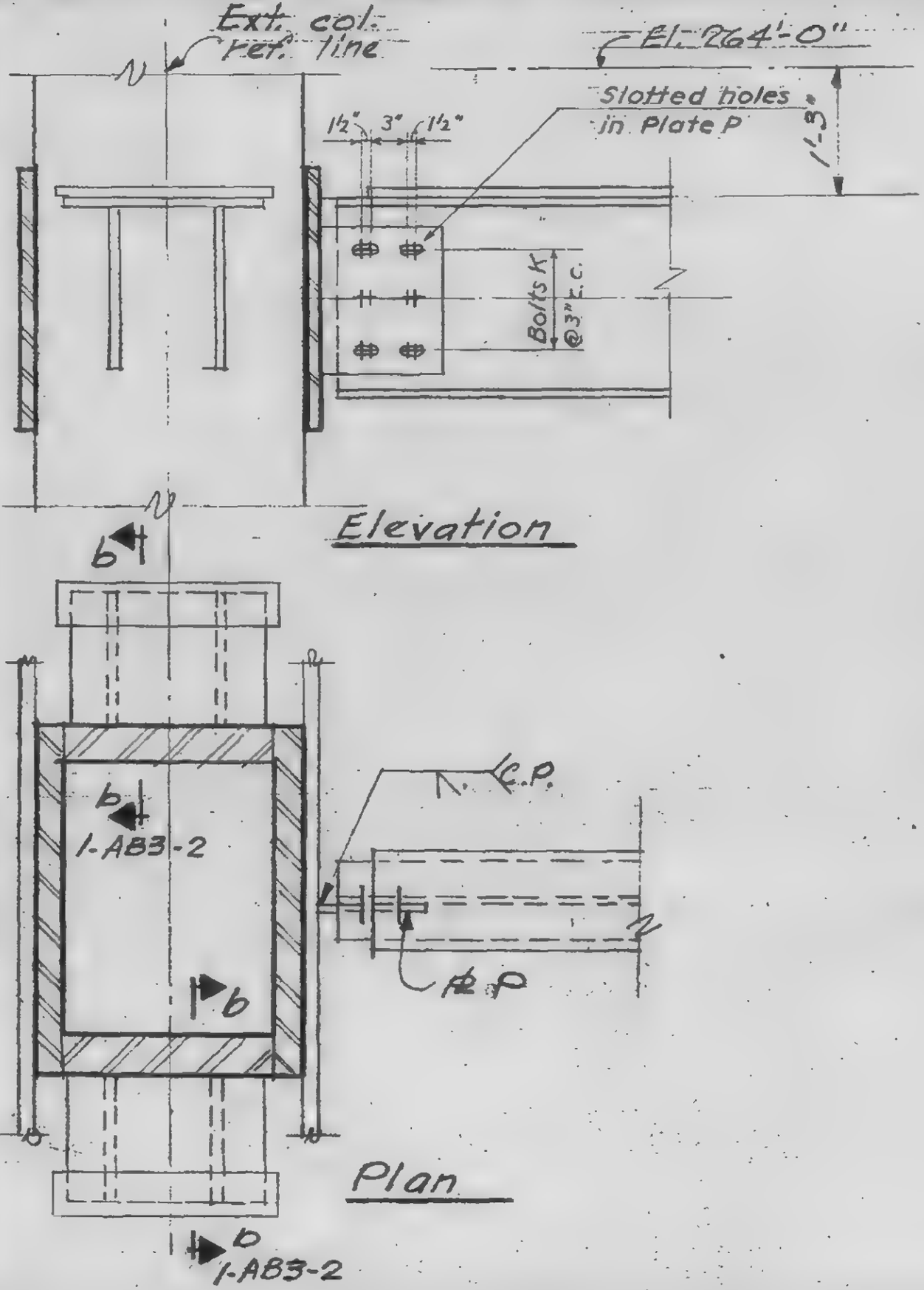

SCHEDULE		
	737A	
PLATES		
P	5/8"	
BOLTS		
K	6 - 1"ø	

LICENSED PROFESSIONAL ENGINEER
LESLIE E. ROBERTSON
No. 34360
UNIVERSITY OF THE STATE OF NEW YORK

1-AB3-5

SKILLING - HELLE - CHRISTIANSEN - ROBERTSON Structural & Civil Engineers

PROJECT THE WORLD TRADE CENTER | TITLE CONNECTION DETAIL 738A | DATE 9-1-67

REVISIONS

1 1-10-68

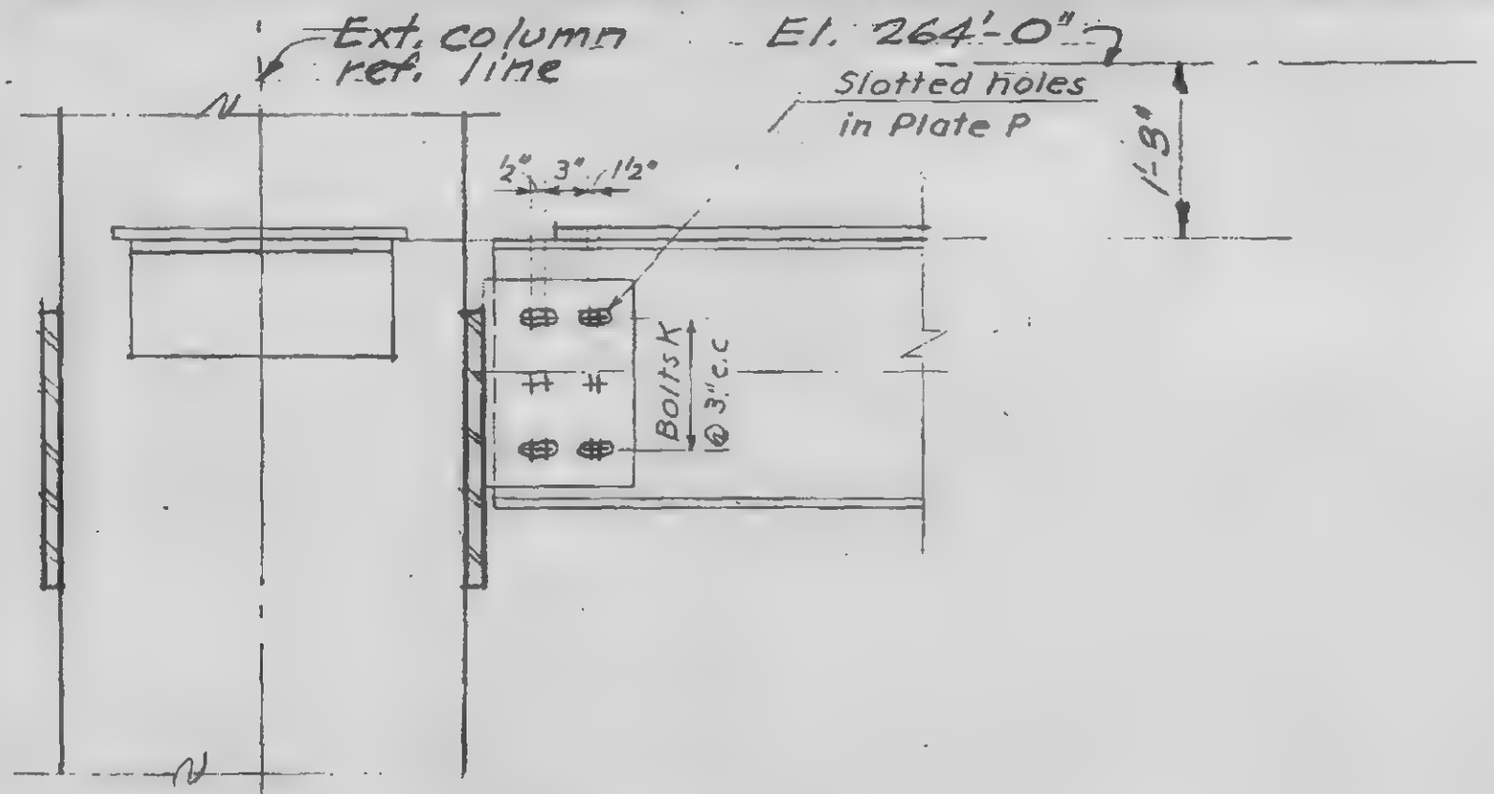

Elevation

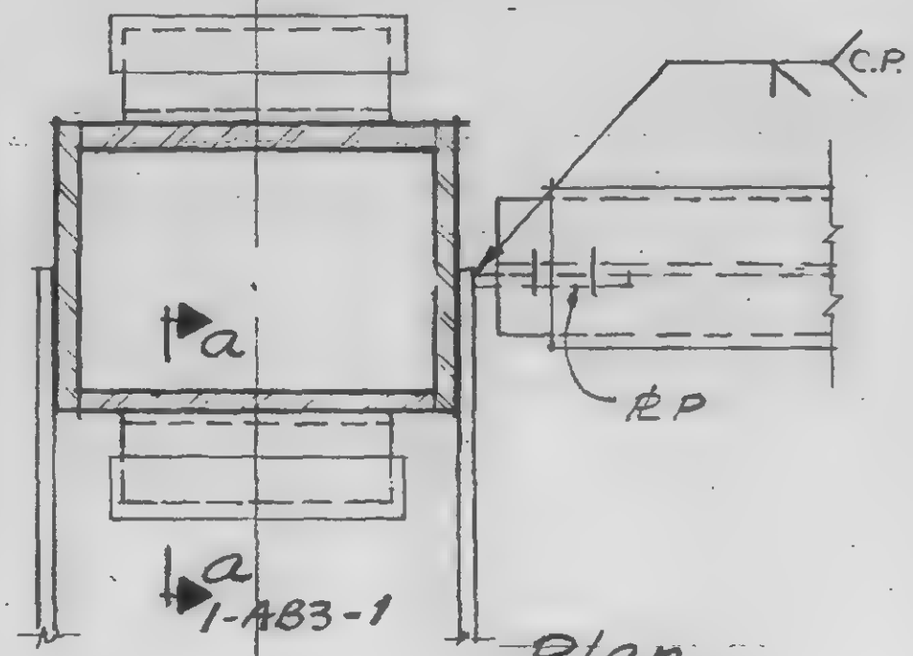

Plan

SCHEDULE	
PLATES	
P	¾"
BOLTS	
K	6 - 1"ϕ

LICENSED PROFESSIONAL ENGINEER LESLIE E. ROBERTSON No. 34360 UNIVERSITY OF THE STATE OF NEW YORK

1-AB3-6

SKILLING - HELLE - CHRISTIANSEN - ROBERTSON Structural & Civil Engineers

PROJECT THE WORLD TRADE CENTER | TITLE CONNECTION DETAIL 750 A,B,C | DATE 9-1-67

REVISIONS

2-19-68 R

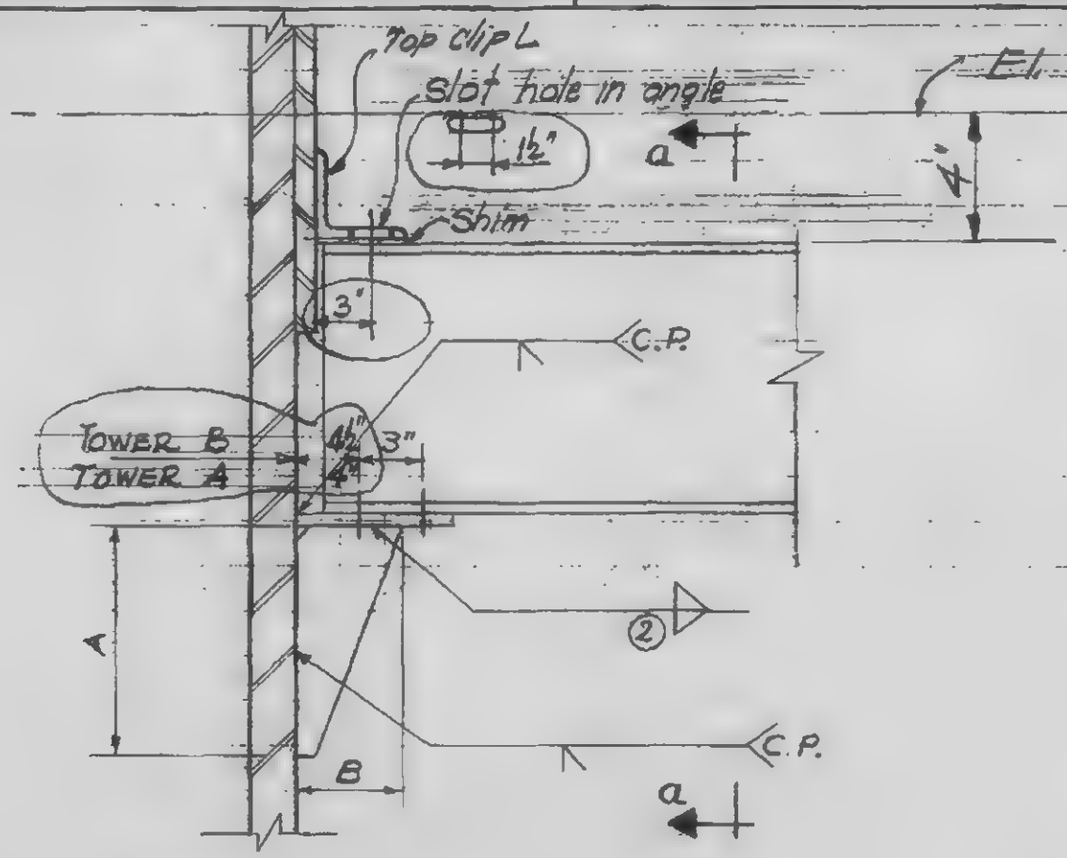

Elevation

SCHEDULE		
	750 A,C	750B
PLATES		
P	½"	½"
Q	½"	½"
DIMENSIONS		
A	0'-10"	1'-0"
B	0'-6"	0'-6"
BOLTS		
K	4 - ¾" ϕ	4 - ⅞" ϕ
WELDS		
②	5/16	5/16

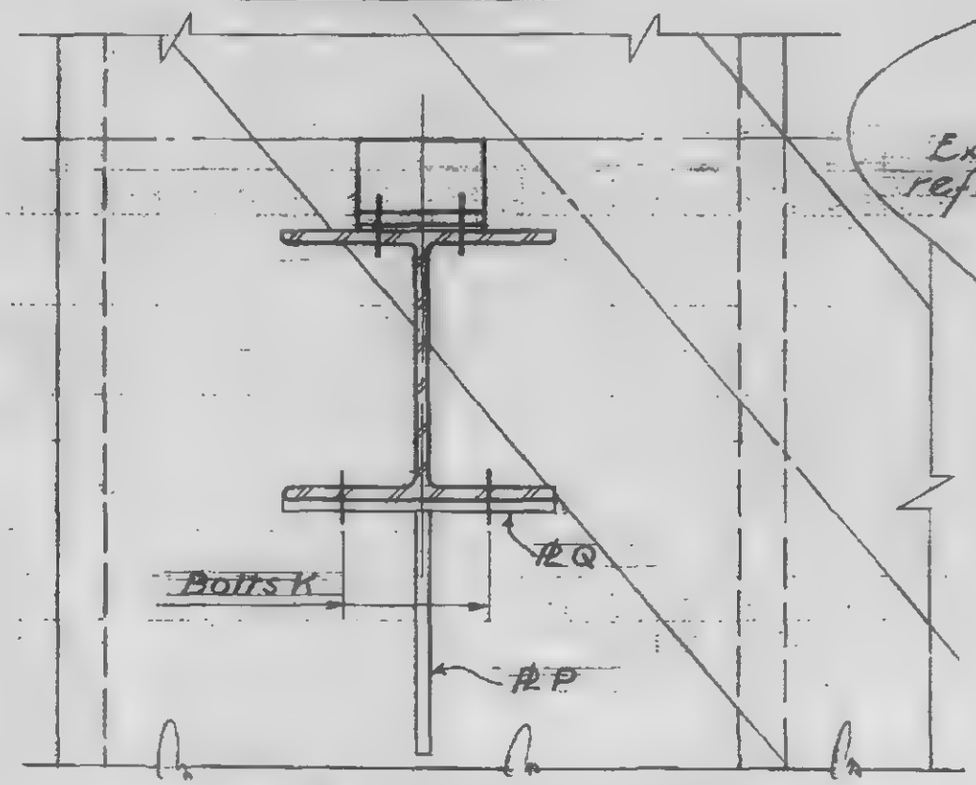

Section a-a

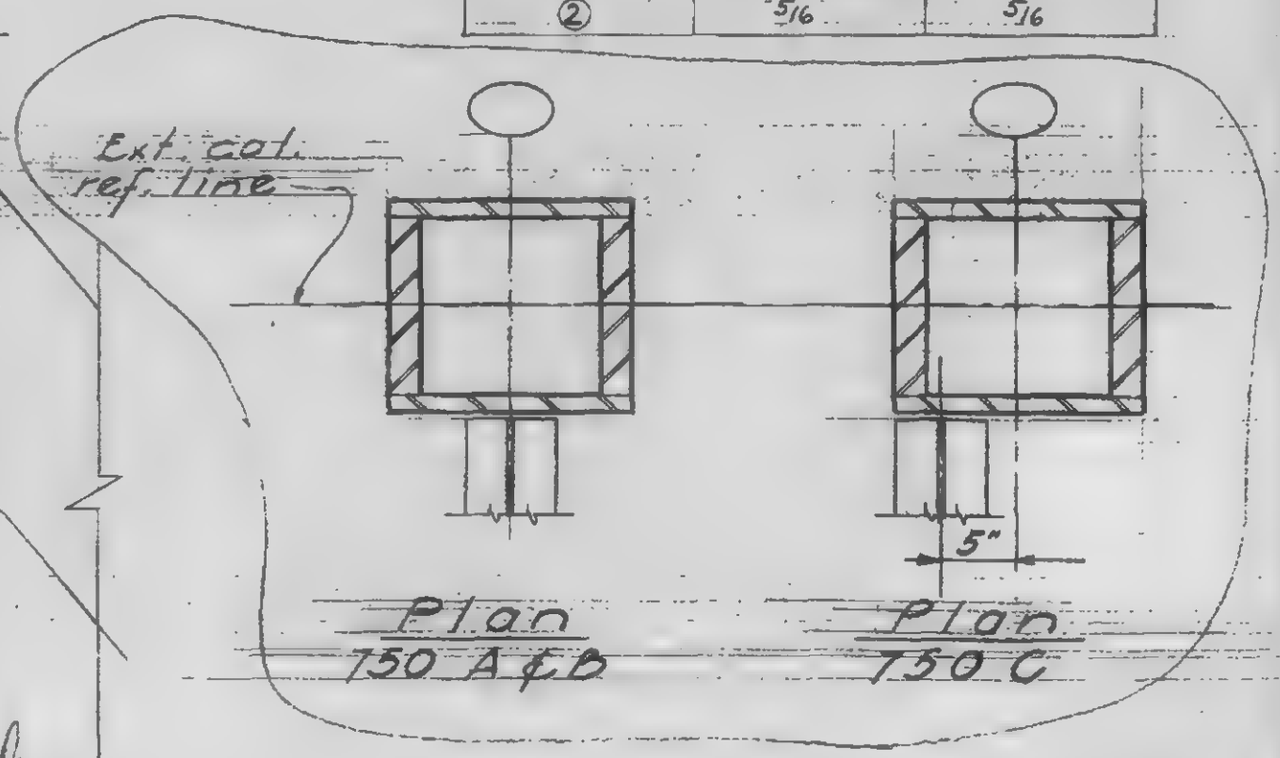

Plan 750 A & B

Plan 750 C

LICENSED PROFESSIONAL ENGINEER LESLIE E. ROBERTSON NO. 34360 UNIVERSITY OF THE STATE OF NEW YORK

1-AB3-7

SKILLING - HELLE - CHRISTIANSEN - ROBERTSON Structural & Civil Engineers

PROJECT THE WORLD TRADE CENTER | TITLE CONNECTION DETAIL 751 A-K,M,N,P,Q,R | DATE 9-1-67

REVISIONS
2-19-68
5-7-68

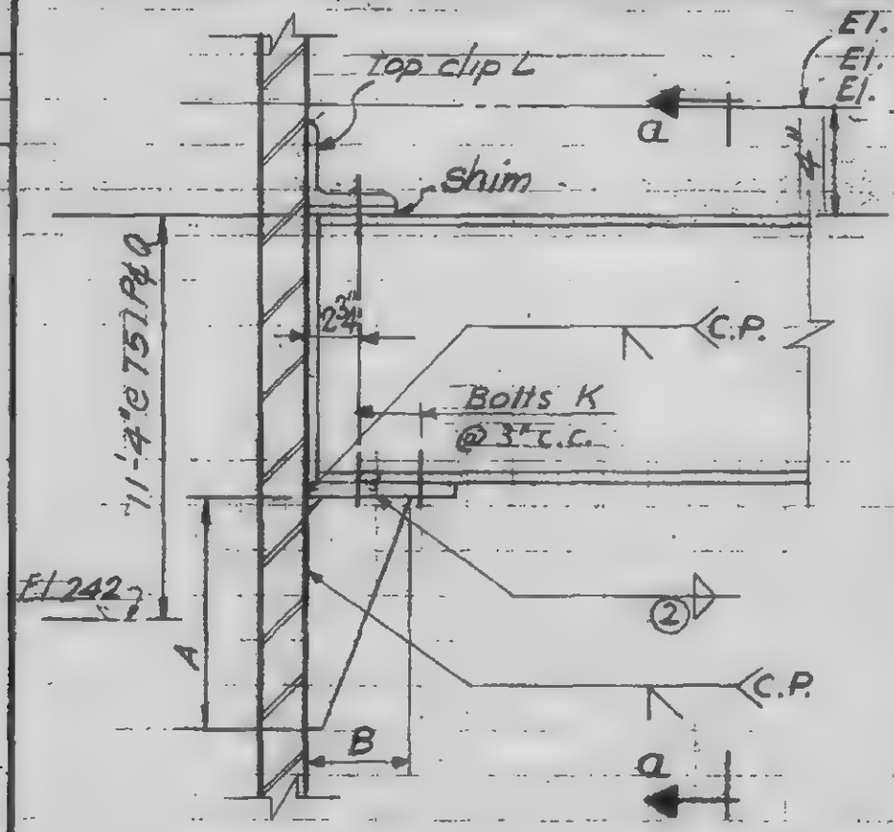

Elevation

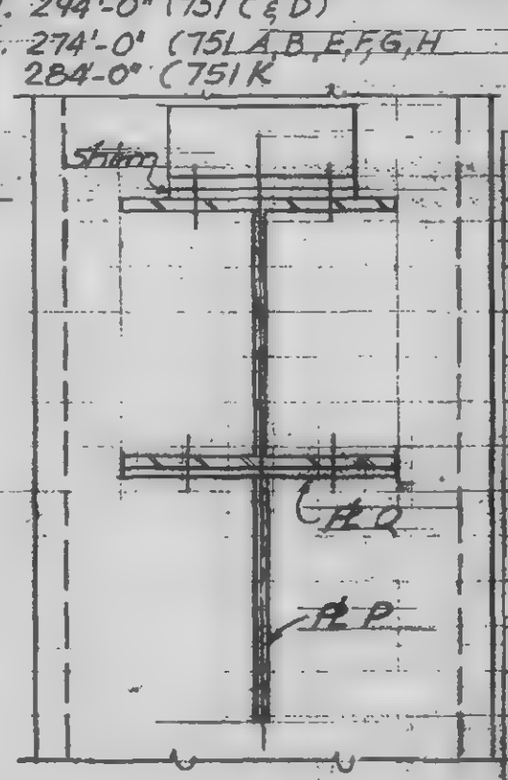

Section a-a

See 1-AB3-8.1 for Plan 751 D & Q

SCHEDULE

DETAIL	751 A,K,N,P,Q	(R) 751 B,D,E,G,H,L,M	751 C,E
PLATES			
P	½"	½"	1"
Q	½"	½"	1"
DIMENSIONS			
A	0'-10"	1'-0"	1'-2"
B	0'-4½"	0'-4½"	0'-6"
BOLTS			
K	4 - ⅞" ø	4 - 1⅛" ø	4 - ⅞" ø
WELDS			
②	5/16	5/16	¼

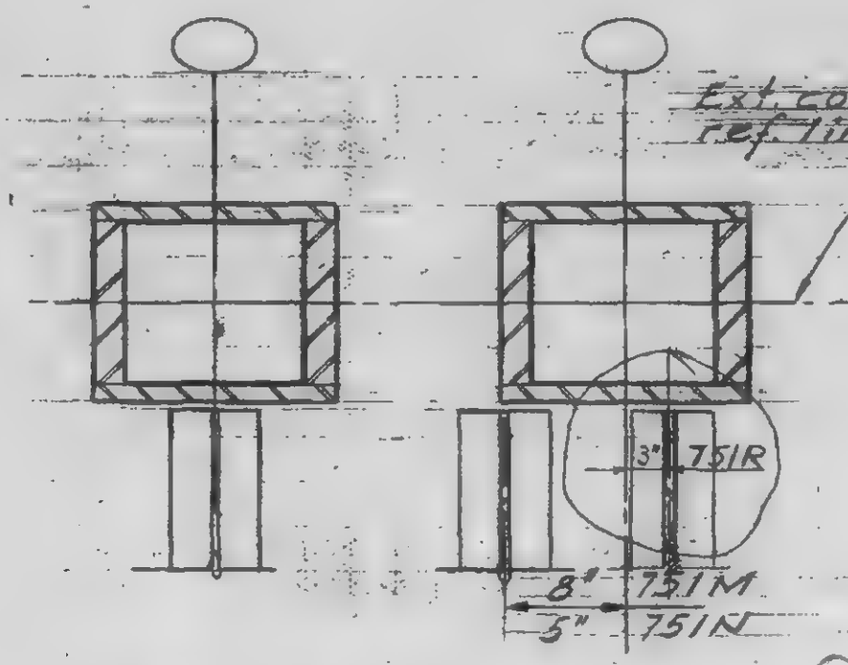

Plan A-C,E,F & P Plan 751M,N,R

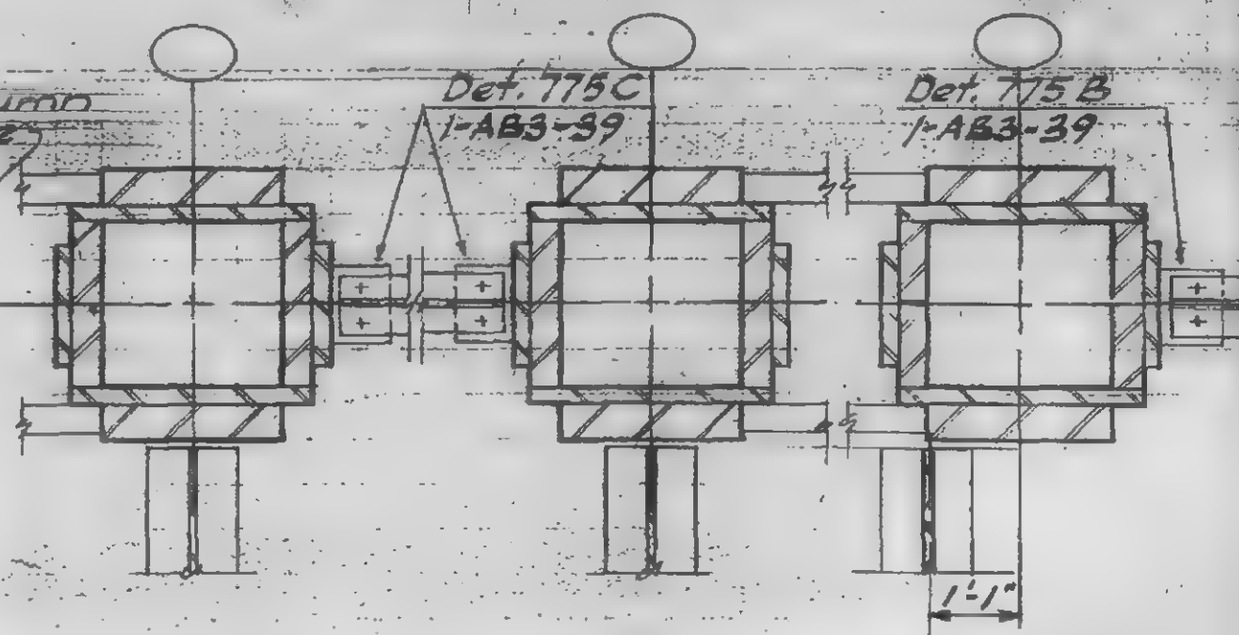

Plan 751G Plan 751H Plan 751K

LICENSED PROFESSIONAL ENGINEER
LESLIE E. ROBERTSON
No. 34360
UNIVERSITY OF THE STATE OF NEW YORK

1-AB3-8

SKILLING - HELLE - CHRISTIANSEN - ROBERTSON Structural & Civil Engineers

PROJECT THE WORLD TRADE CENTER | TITLE CONNECTION DETAIL 751 D & Q | DATE 2-19-68

REVISIONS

R

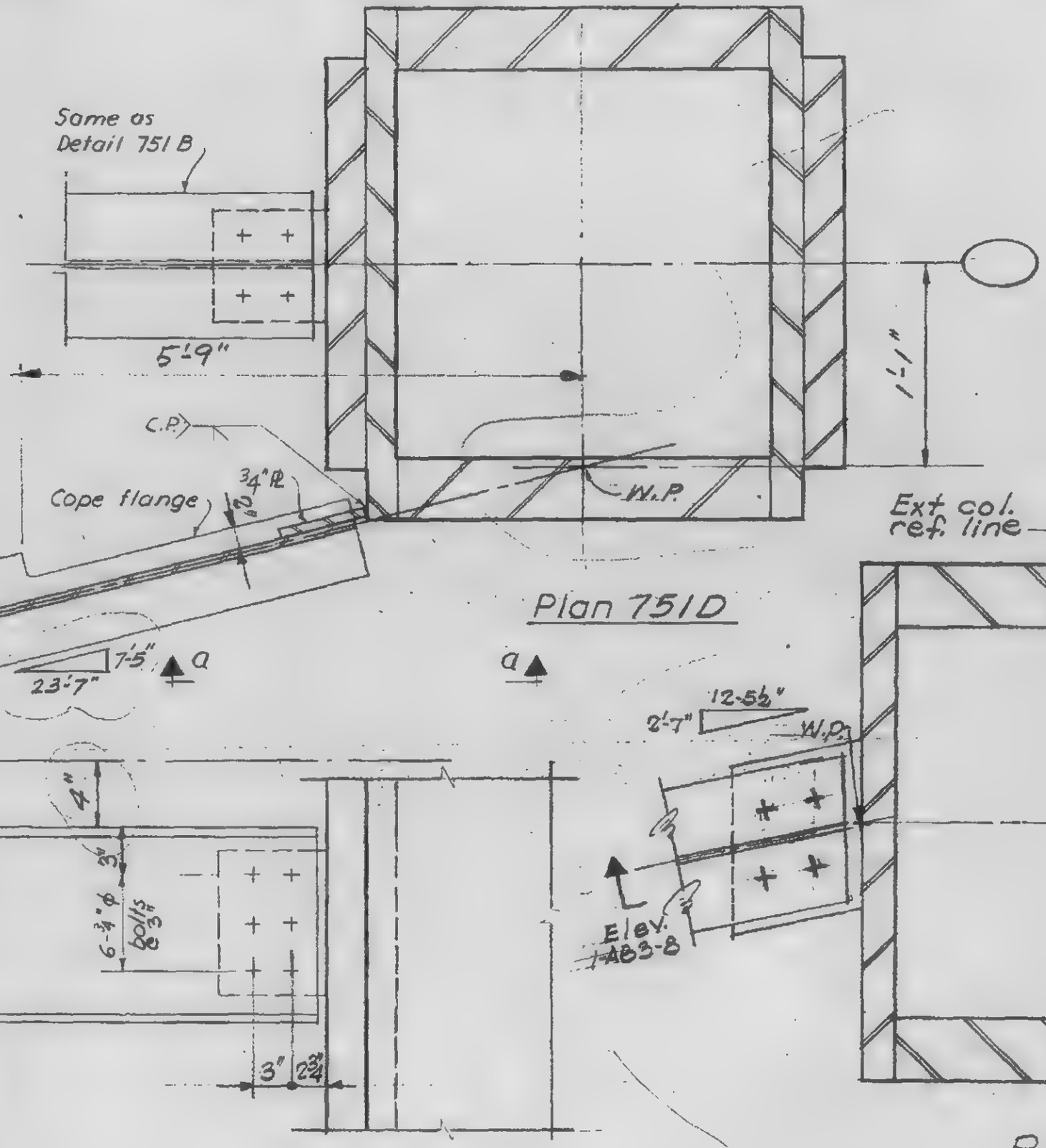

LICENSED PROFESSIONAL ENGINEER LESLIE E. ROBERTSON No. 34360 UNIVERSITY OF THE STATE OF NEW YORK

1-AB3-8.1

SKILLING - HELLE - CHRISTIANSEN - ROBERTSON — Structural & Civil Engineers

PROJECT THE WORLD TRADE CENTER | TITLE CONNECTION DETAIL 752 A-H, 757 A-D, 760 A-Y | DATE 9-1-67

REVISIONS

2-19-68 R

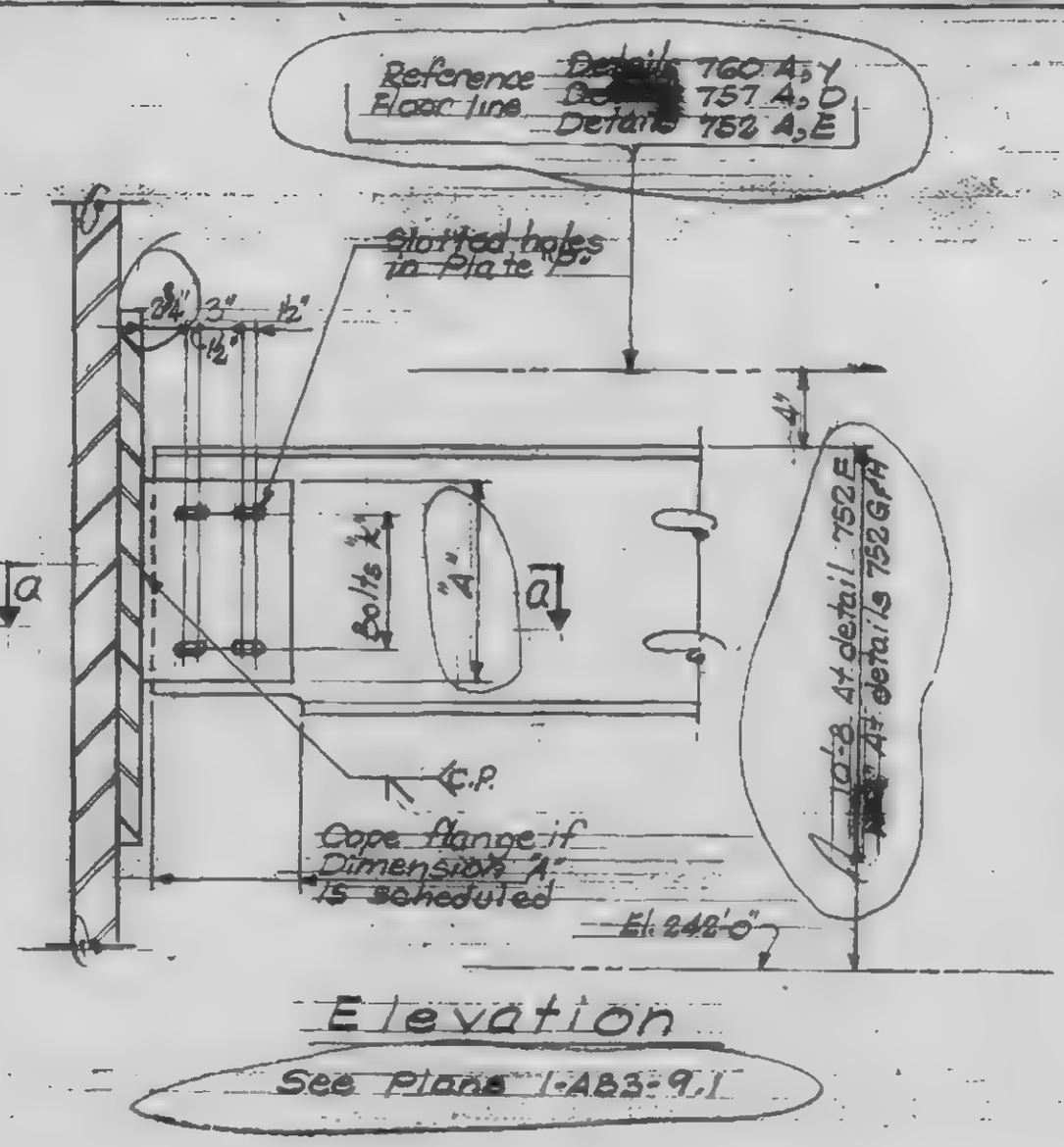

Elevation

See Plans 1-AB3-9.1

SCHEDULE			
DETAIL	752 A, E 757 A, D 760 A, E, P, Q 760 S, T, V	752 B, C, D, E 757 B, C 760 B, F, H 760 K, M, N 760 R, W, Y	760 O, G, X
PLATE "P"	3/4"	3/4"	3/4"
Dimension "A"	—	—	1'-0"
Bolts "K"	4-1" ϕ	6-1 1/8" ϕ	6-1 1/8" ϕ

1-AB3-9

SKILLING - HELLE - CHRISTIANSEN - ROBERTSON — Structural & Civil Engineers

PROJECT: THE WORLD TRADE CENTER | TITLE: CONNECTION DETAIL 752A-H, 757A-D, 760 A-Y | DATE: 2-19-68

REVISIONS
5-7-68

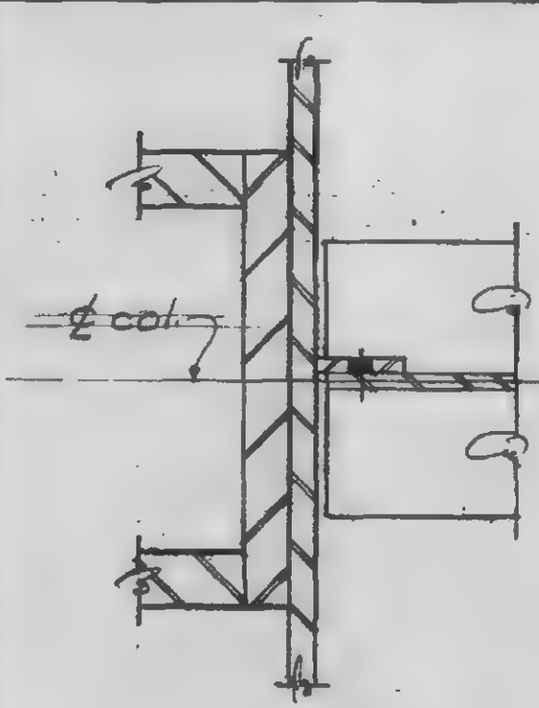

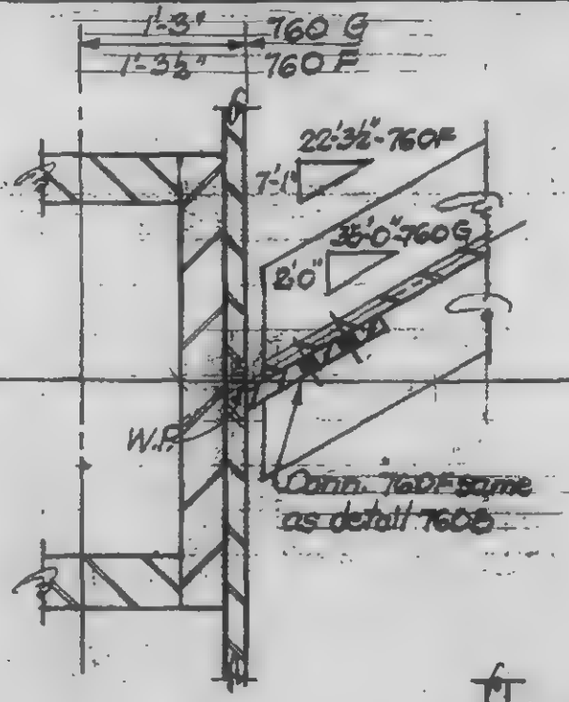

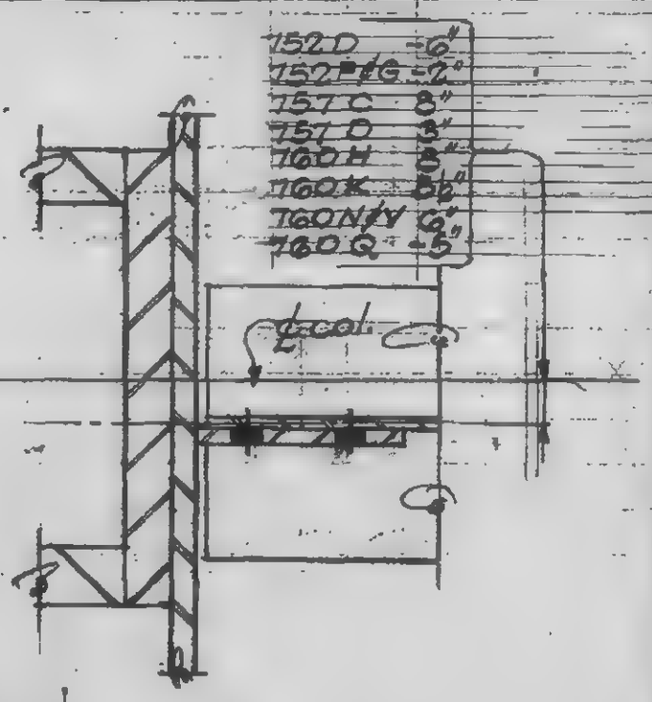

Section a-a
757 A & B
752 A, B & H
760 B

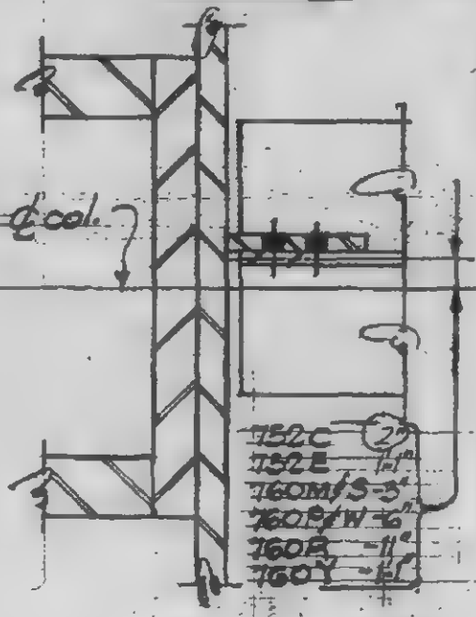

Section a-a
752 C & E
760 M, P, R, S, W & Y

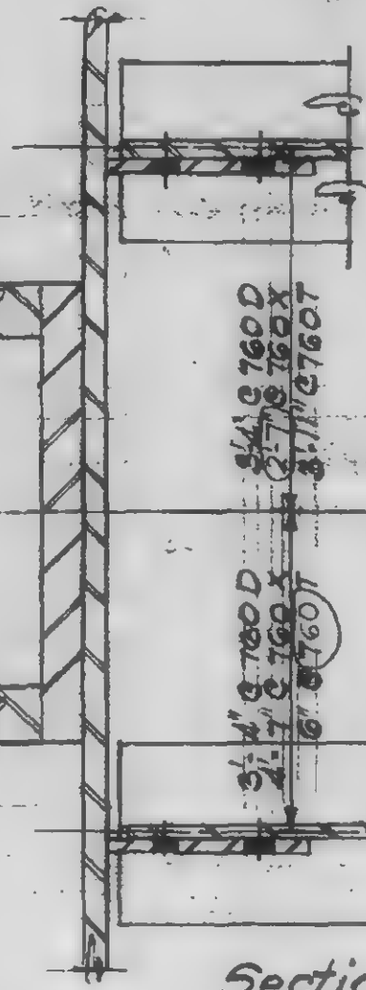

Section a-a
760 F & G

Section a-a
760 D

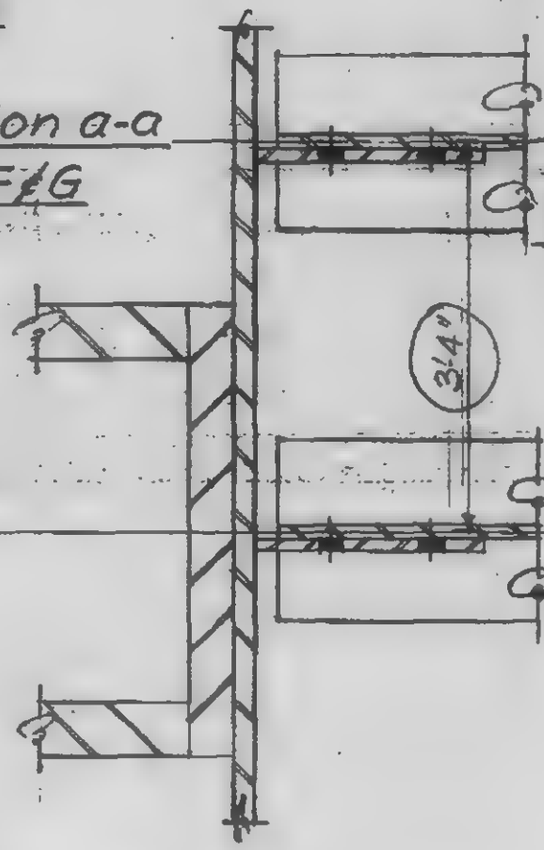

Section a-a
752 D, F & G
757 C & D
760 H, K, N, Q & V

Section a-a
760 E

1-AB3-9.1

SKILLING - HELLE - CHRISTIANSEN - ROBERTSON — Structural & Civil Engineers

PROJECT: THE WORLD TRADE CENTER | TITLE: CONNECTION DETAIL 753 A B C & D | DATE: 9-1-67

REVISIONS

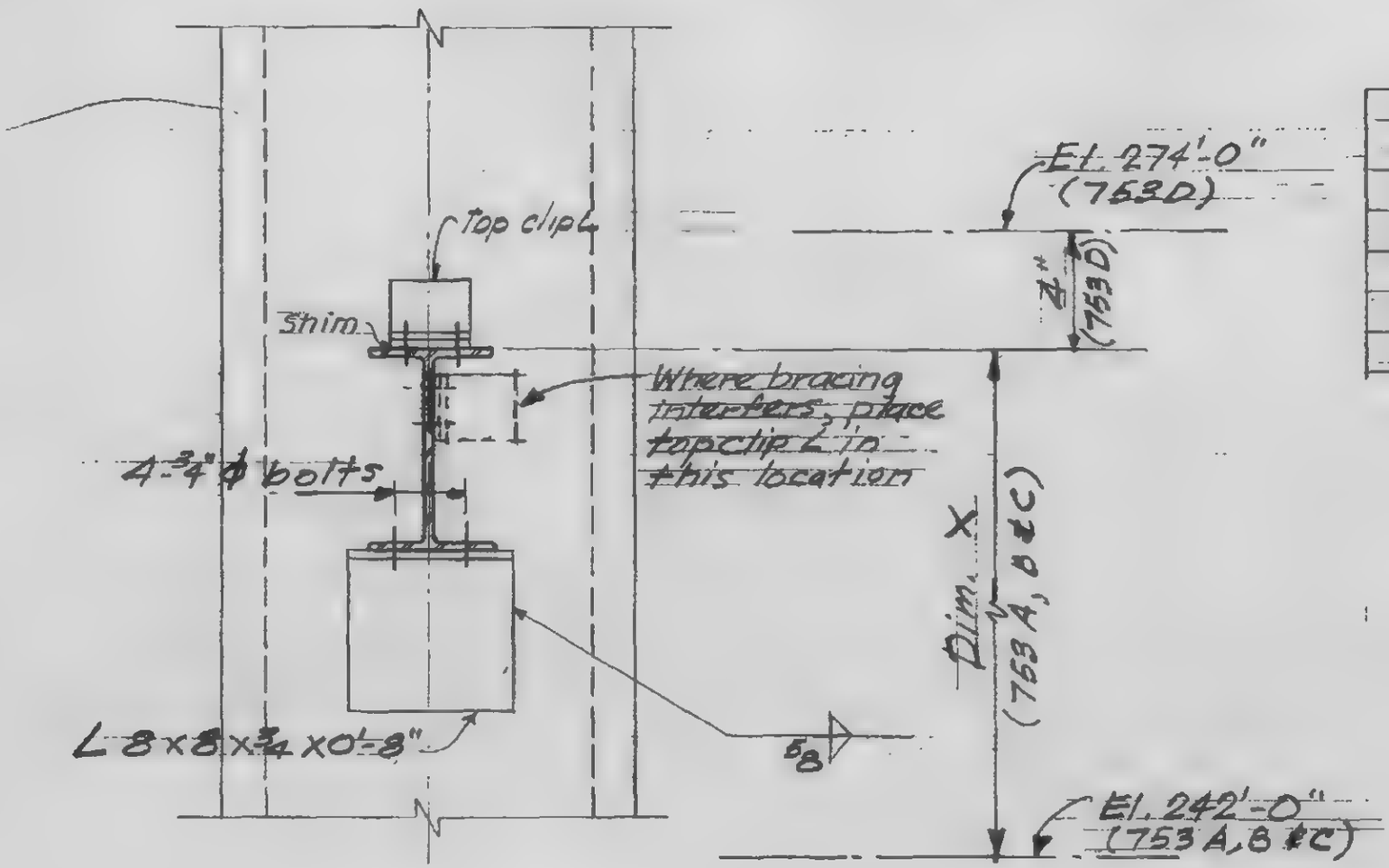

Elevation

SCHEDULE	
Detail	Dim. X
753 A	8'-2"
753 B	10'-8"
753 C	7'-2"

LICENSED PROFESSIONAL ENGINEER — LESLIE E. ROBERTSON — No. 34360 — STATE OF NEW YORK

1-AB3-10

SKILLING - HELLE - CHRISTIANSEN - ROBERTSON Structural & Civil Engineers

PROJECT THE WORLD TRADE CENTER | TITLE CONNECTION DETAIL 754 A | DATE 9-1-67

REVISIONS

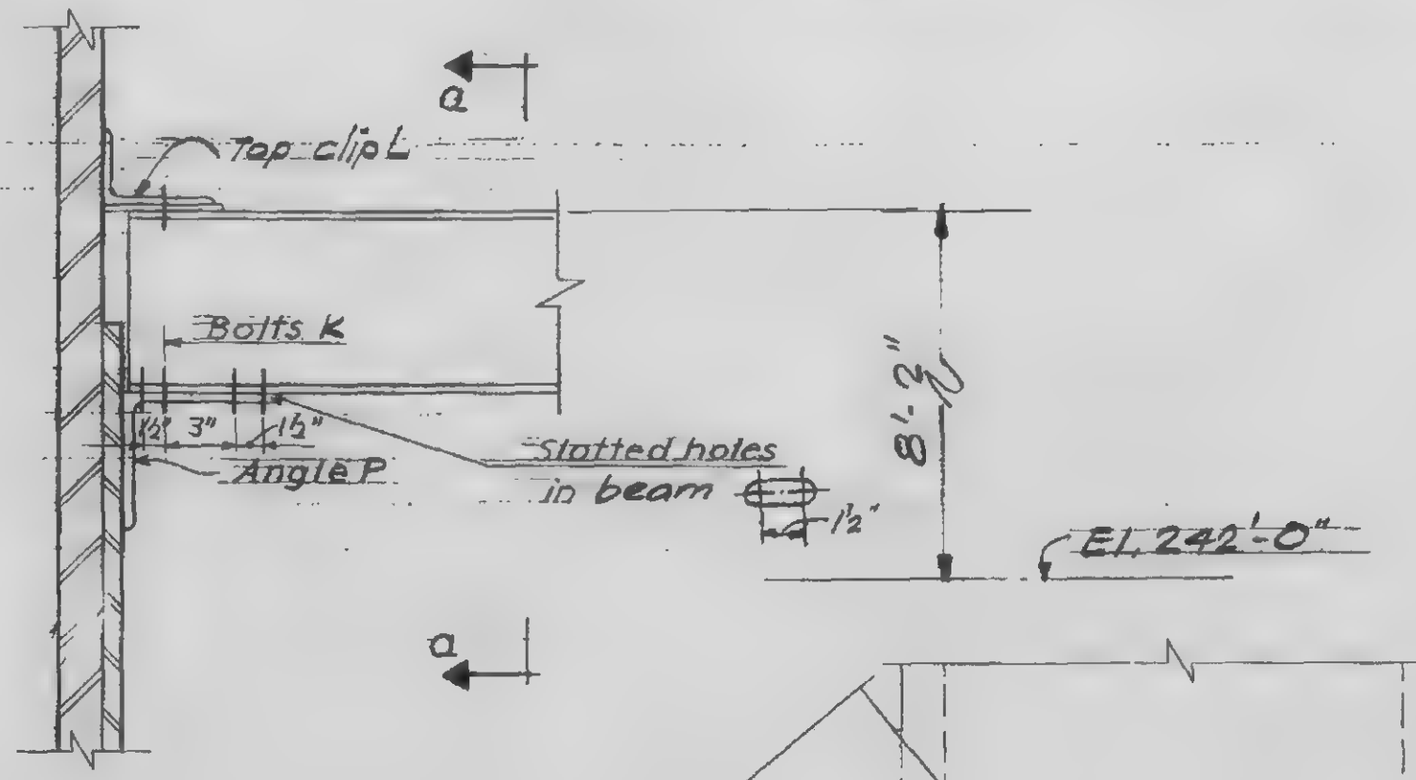

Elevation

SCHEDULE	
ANGLES	
P	8×6×¾×0'-6"
BOLTS	
K	4 - ¾" ϕ
WELDS	
②	5/16

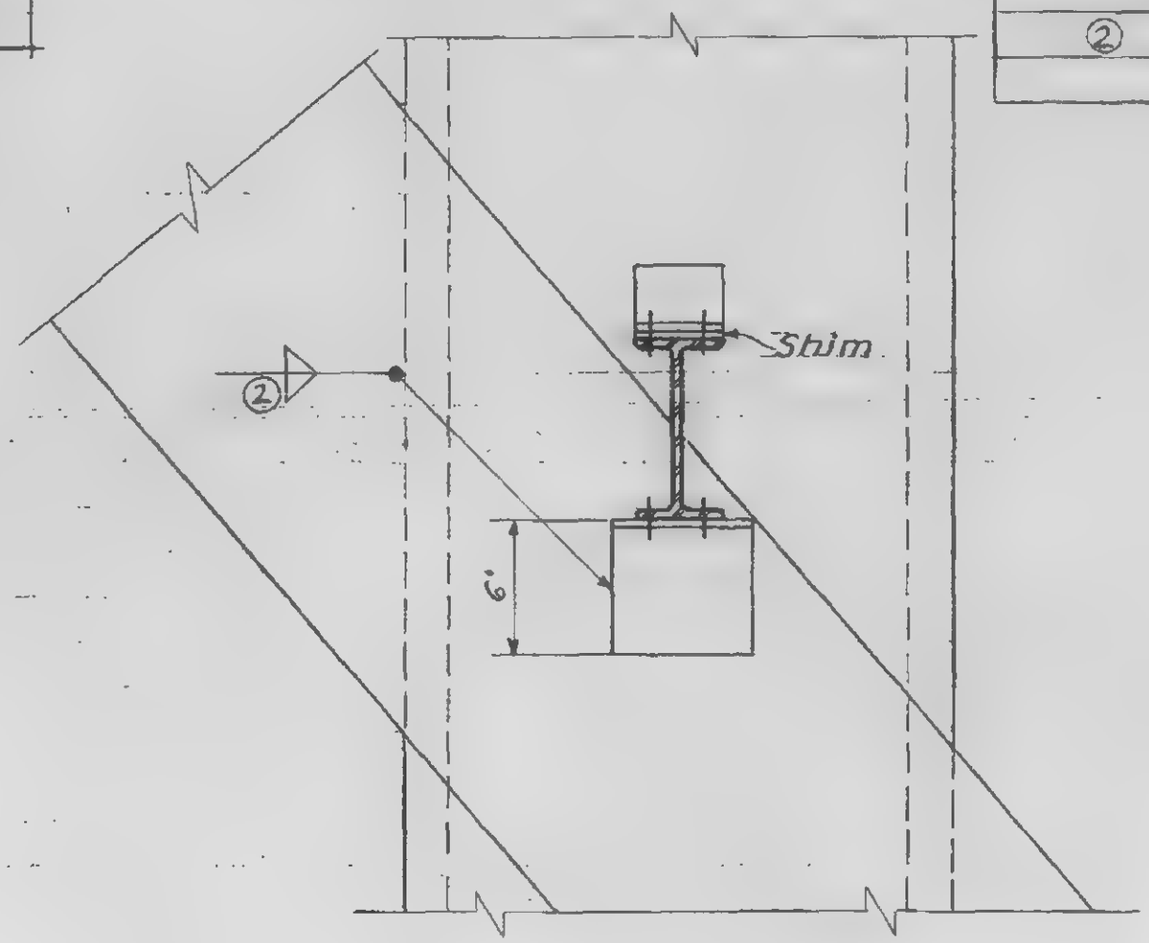

Section a-a

LICENSED PROFESSIONAL ENGINEER
LESLIE E. ROBERTSON
No. 34060
REGISTERED BY THE STATE OF NEW YORK

1-AB3-11

SKILLING - HELLE - CHRISTIANSEN - ROBERTSON — Structural & Civil Engineers

PROJECT: THE WORLD TRADE CENTER | TITLE: CONNECTION DETAIL 755A & 755B | DATE: 9-1-67

REVISIONS
1-10-68

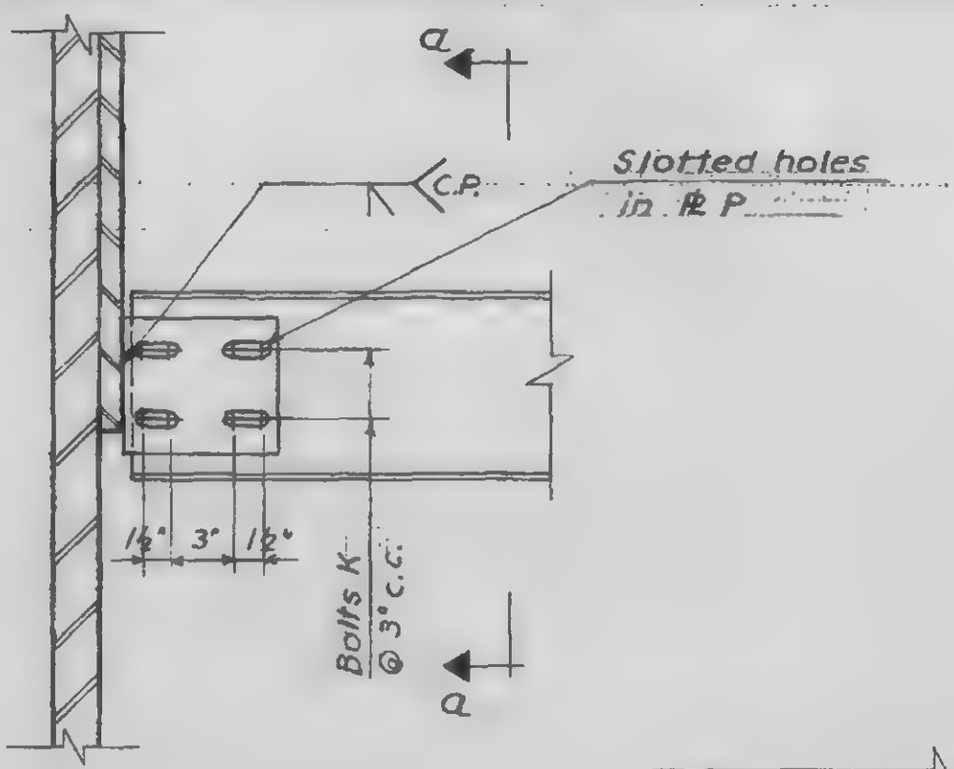

SCHEDULE		
PLATES	755 A	755 B
P	⅞"	⅞"
BOLTS		
K	4 - 1" ϕ	4 - 1" ϕ

Elevation
755 A

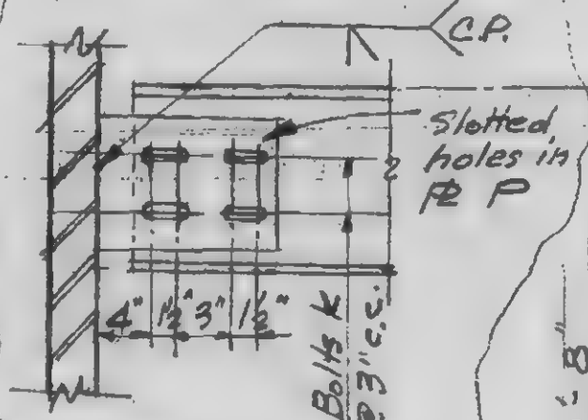

Elevation
755 B

10'-8"

El. 242'-0"

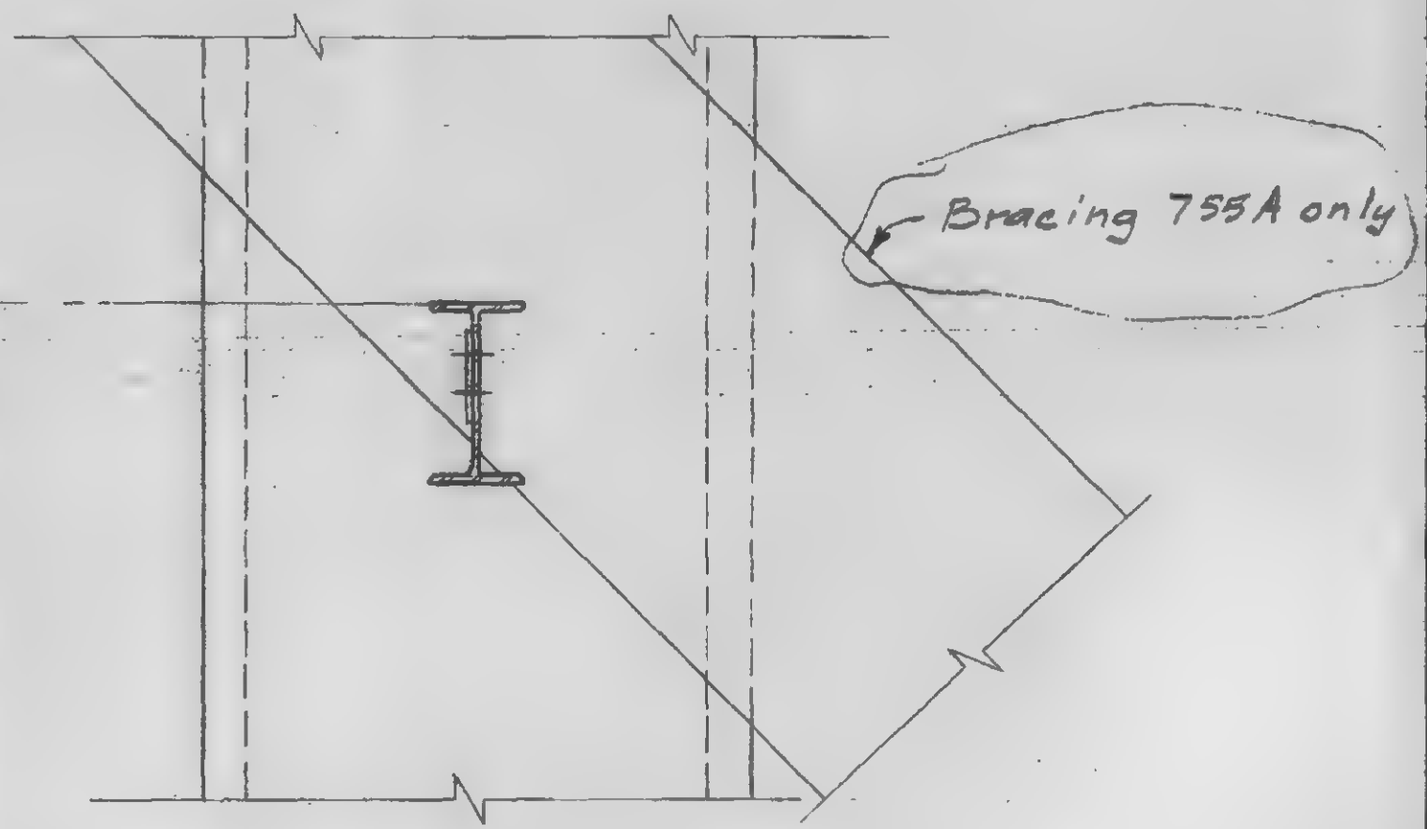

Section a-a

LICENSED PROFESSIONAL ENGINEER
LESLIE E. ROBERTSON
No. 34360
UNIVERSITY OF THE STATE OF NEW YORK

1-AB3-12

SKILLING - HELLE - CHRISTIANSEN - ROBERTSON Structural & Civil Engineers

PROJECT THE WORLD TRADE CENTER | TITLE CONNECTION DETAIL 756 A - H | DATE 9-1-67

REVISIONS
2-19-68

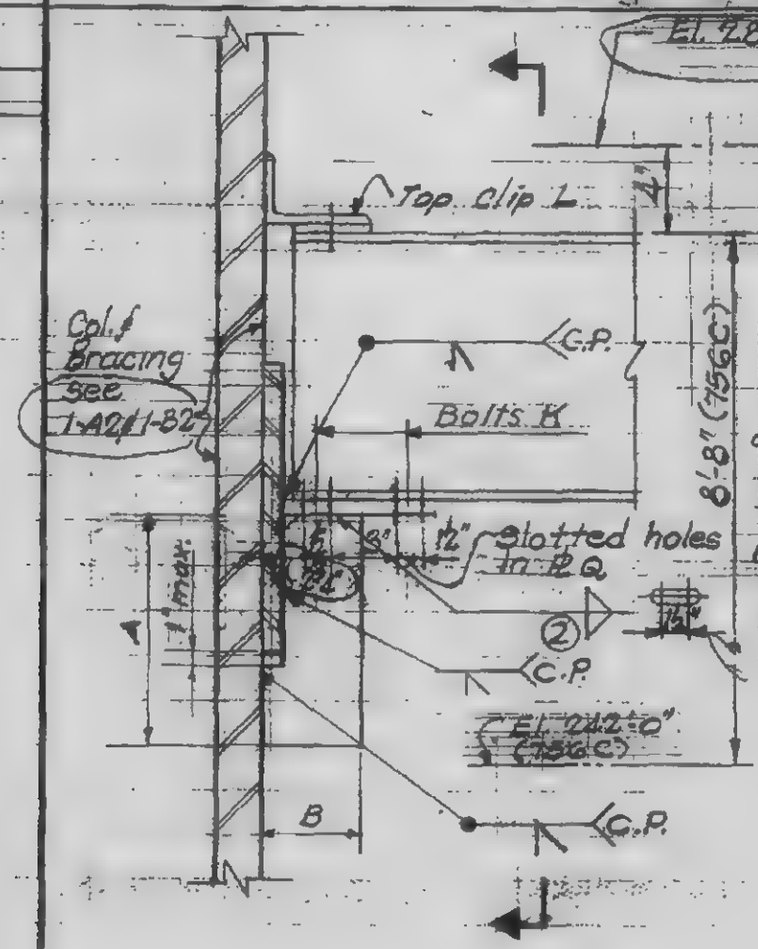

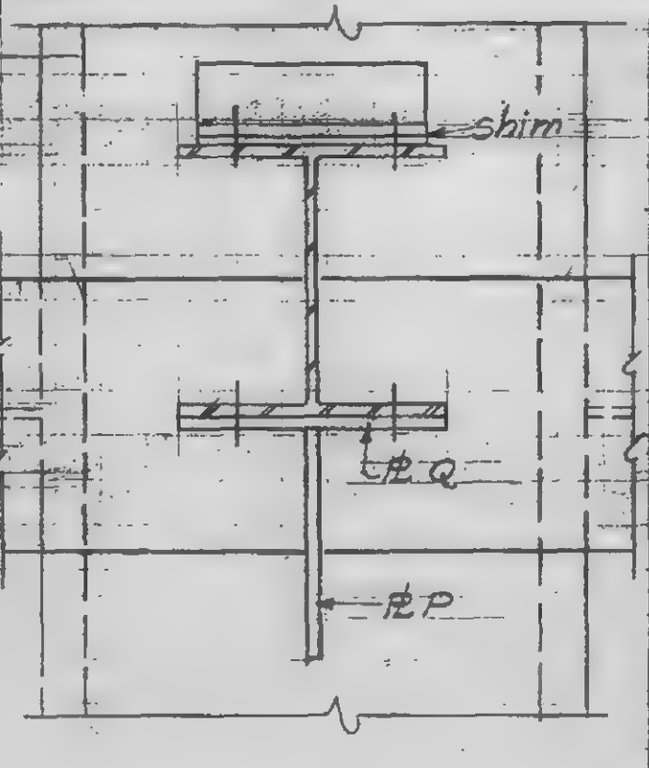

SCHEDULE

	756 A, C, 756 E, 756 F	756 D, 756 G, 756 H
PLATES		
P	½	⅝
Q	½	⅝
DIMENSIONS		
A	0'-10"	1'-1"
B	0'-5½"	0'-5½"
BOLTS		
K	4 - ¾" ø	4 - 1⅛" ø
WELDS		
②	5/16	5/16

Elevation

Section a-a

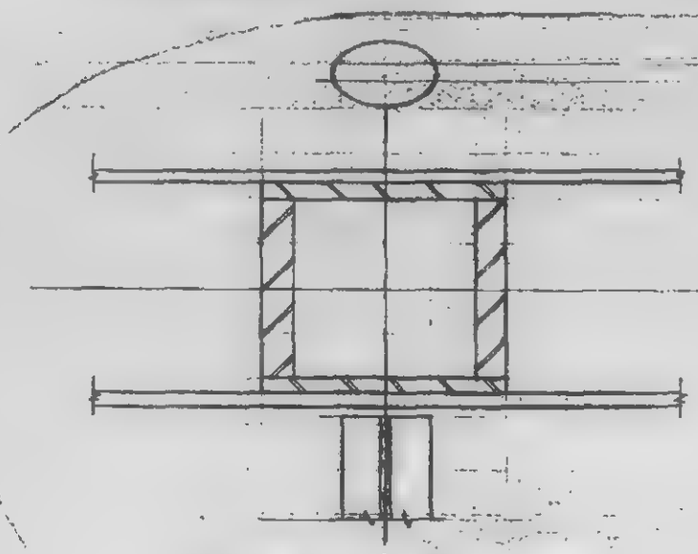

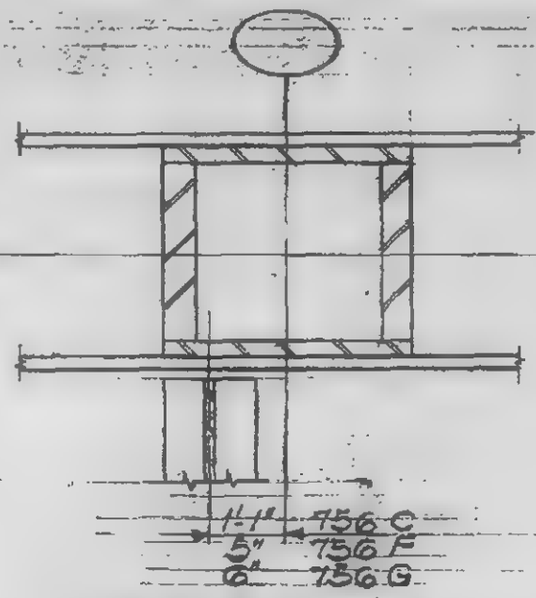

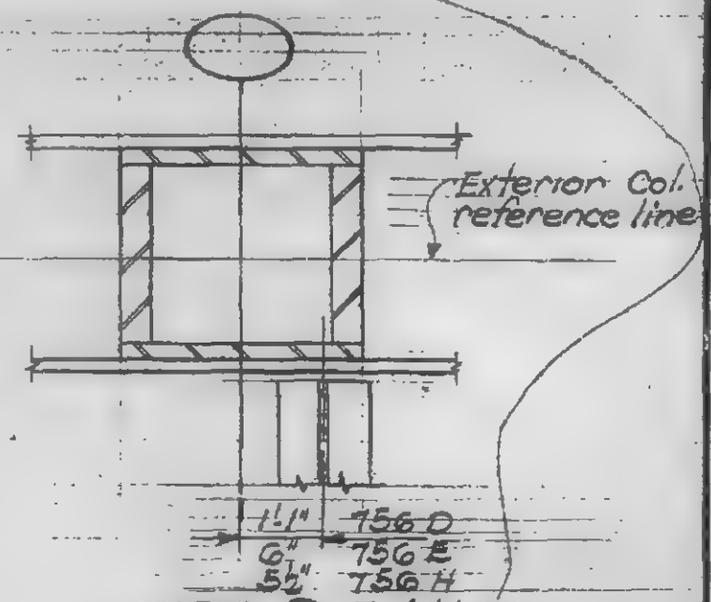

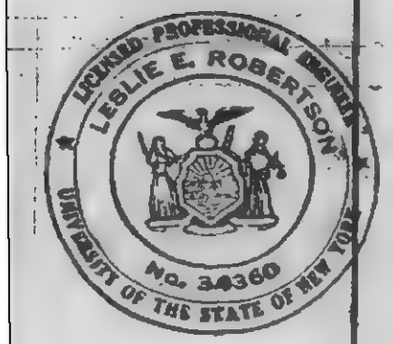

1-AB3-13

SKILLING - HELLE - CHRISTIANSEN - ROBERTSON Structural & Civil Engineers

PROJECT THE WORLD TRADE CENTER | TITLE CONNECTION DETAIL 758 A & B | DATE 9-1-67

REVISIONS

2-19-68

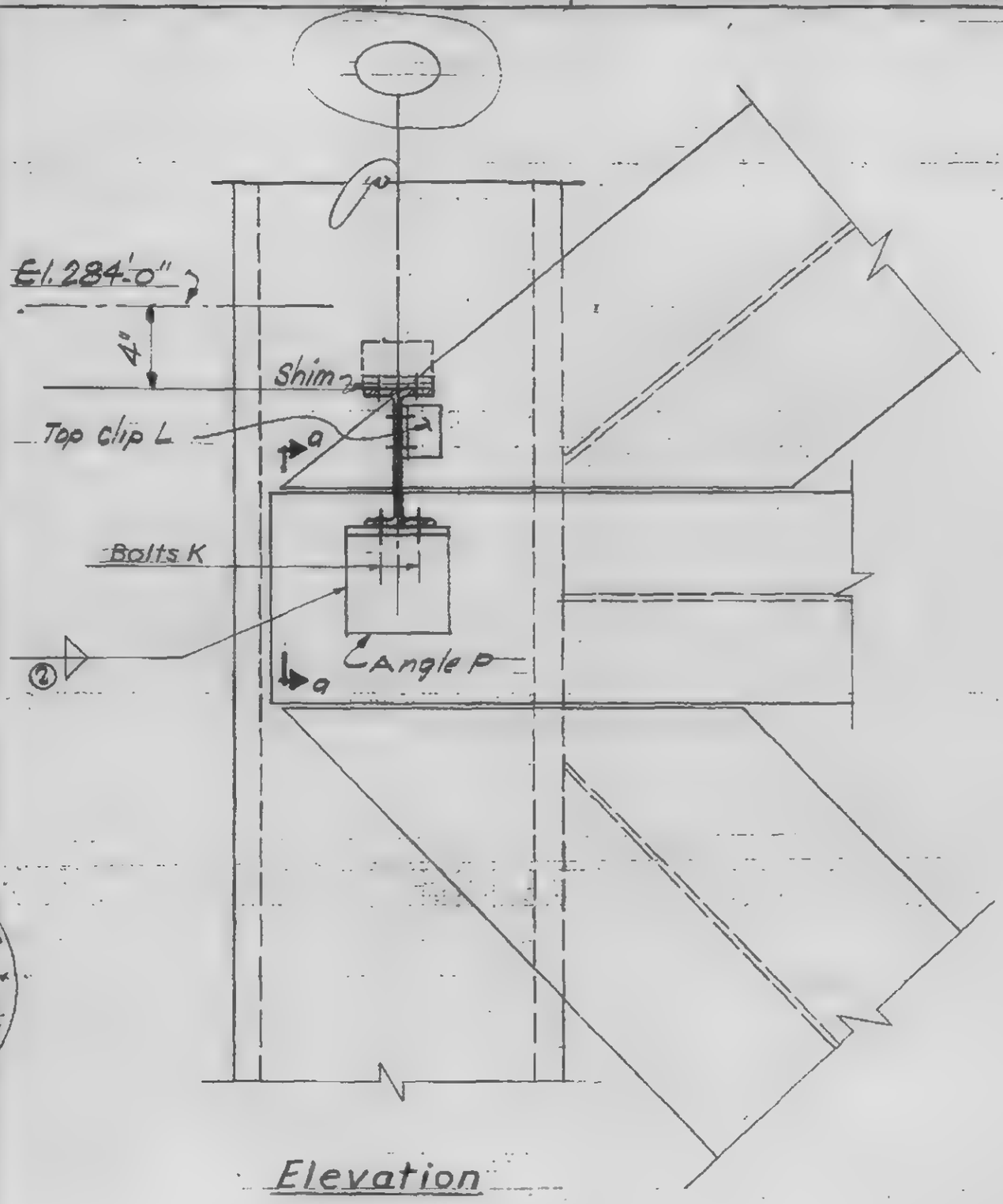

Elevation

SCHEDULE	
ANGLES	
P	6x4 x ¾ x 0'-6"
BOLTS	
K	2 - ¾ ϕ
WELDS	
②	⅝

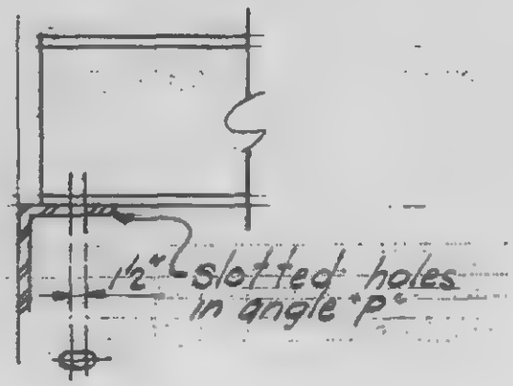

Section a-a

LICENSED PROFESSIONAL ENGINEER
LESLIE E. ROBERTSON
No. 34360
UNIVERSITY OF THE STATE OF NEW

1-AB3-14

SKILLING - HELLE - CHRISTIANSEN - ROBERTSON Structural & Civil Engineers

PROJECT: THE WORLD TRADE CENTER | TITLE: CONNECTION DETAIL 759A, 765A, 769A | DATE: 9-1-67

REVISIONS

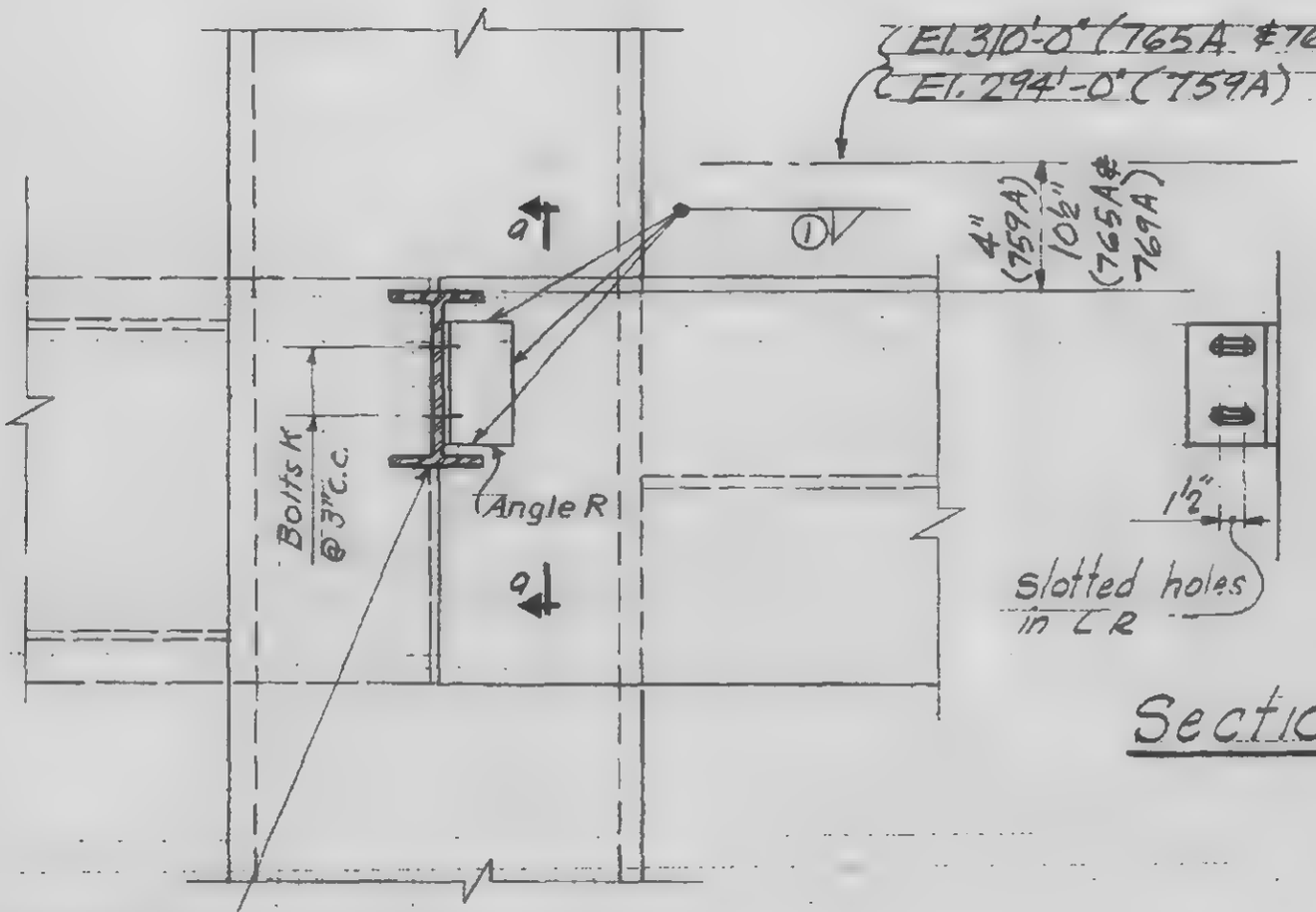

Section a-a

Elevation

SCHEDULE	
ANGLE	
R	5 × 3½ × ⅜ × 0'-6"
BOLTS	
K	2 - 1" ϕ
WELDS	
①	5/16

LICENSED PROFESSIONAL ENGINEER
LESLIE E. ROBERTSON
No. 34360
UNIVERSITY OF THE STATE OF N.Y.

1-AB3-15

SKILLING - HELLE - CHRISTIANSEN - ROBERTSON Structural & Civil Engineers

PROJECT THE WORLD TRADE CENTER | TITLE CONNECTION DETAIL 761 A & B | DATE 9-1-67

REVISIONS

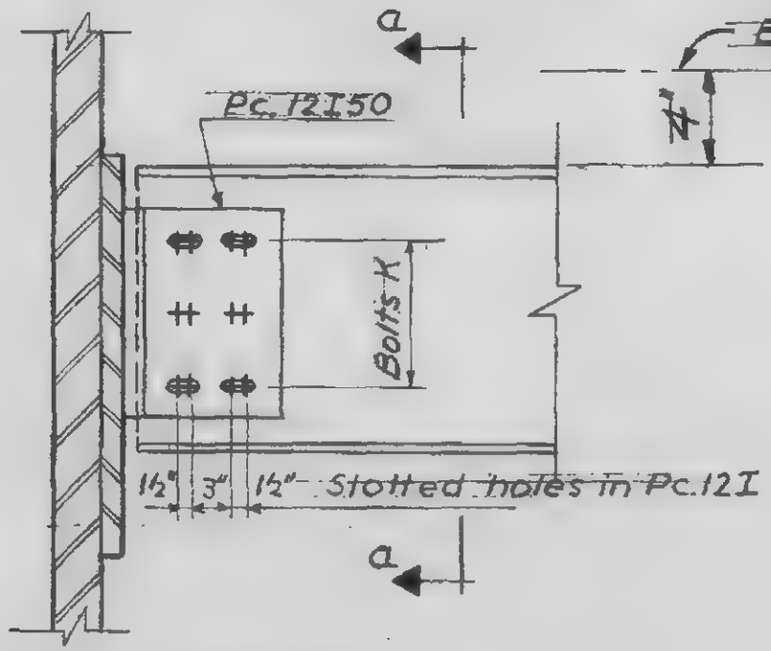

Elevation

SCHEDULE		
	761 A	761 B
BOLTS		
K	4 - 1"ϕ	6 - 1⅛"ϕ
WELDS		
①	5/16	3/8

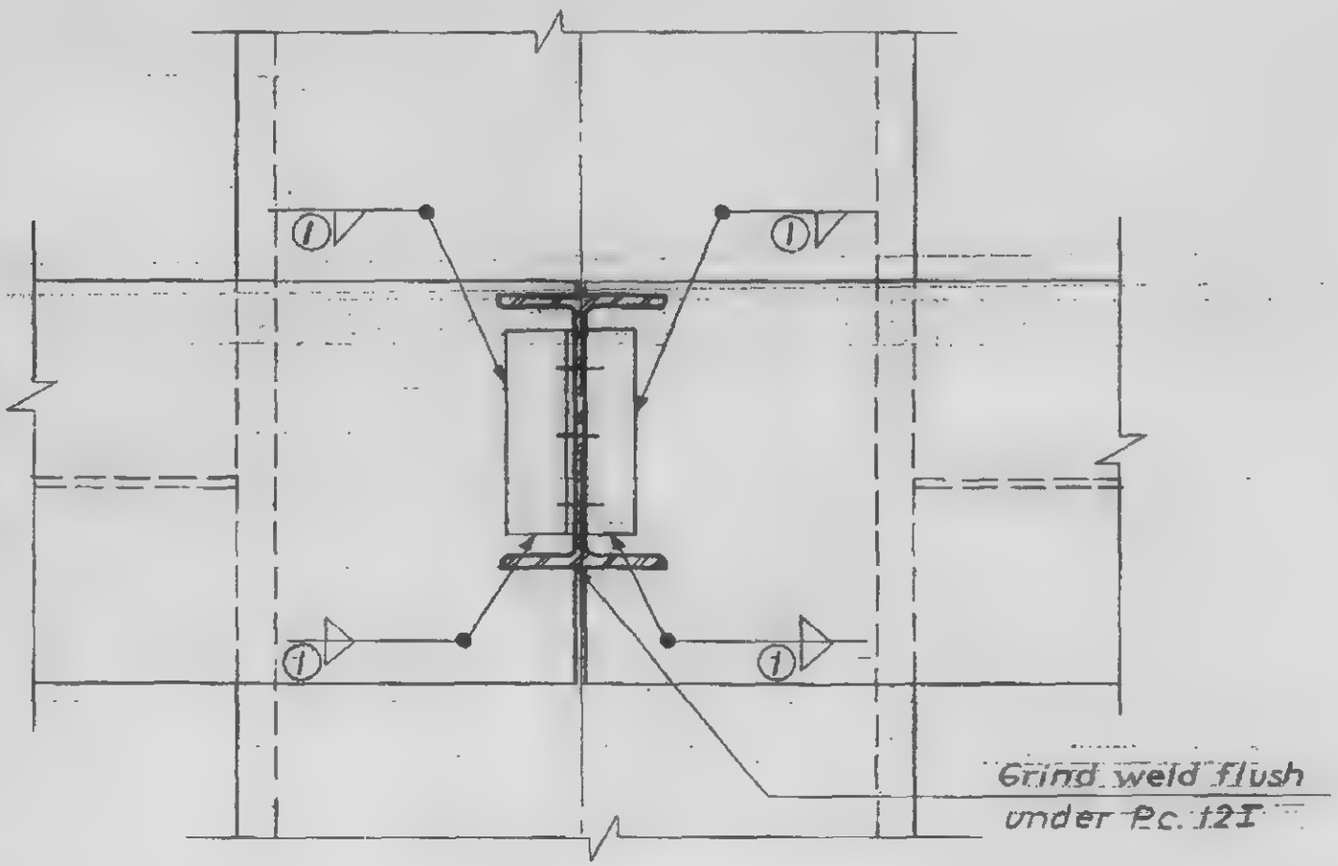

Section a-a

LICENSED PROFESSIONAL ENGINEER LESLIE E. ROBERTSON No. 34360 UNIVERSITY OF THE STATE OF NEW YORK

1-AB3-16

SKILLING - HELLE - CHRISTIANSEN - ROBERTSON — Structural & Civil Engineers

PROJECT: THE WORLD TRADE CENTER | TITLE: CONNECTION DETAIL 766 A & B | DATE: 9-1-67

REVISIONS

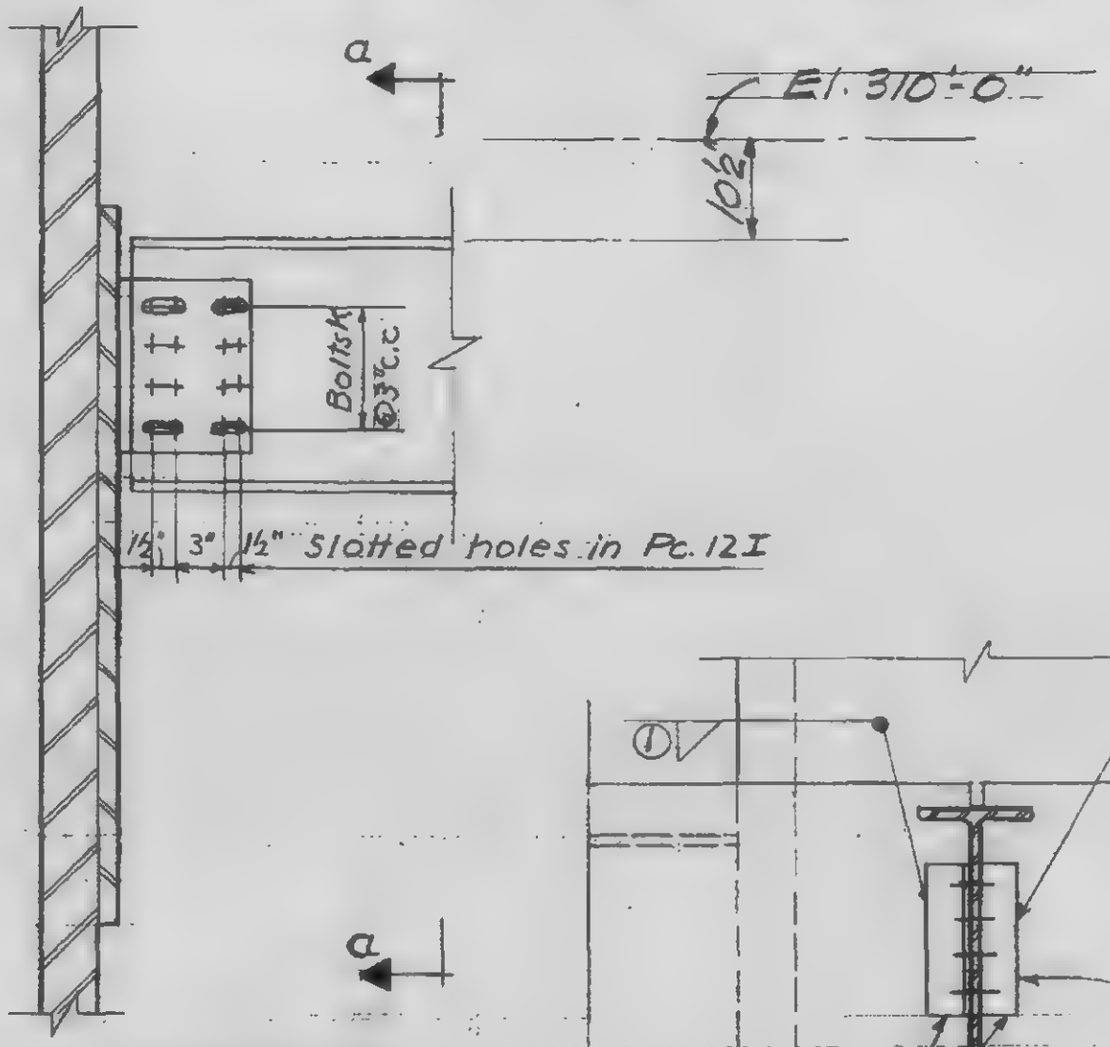

Elevation

SCHEDULE		
	766 A	766 B
BOLTS		
K	8 - ⅞" ϕ	8 - 1" ϕ
WELDS		
①	5/16	5/16

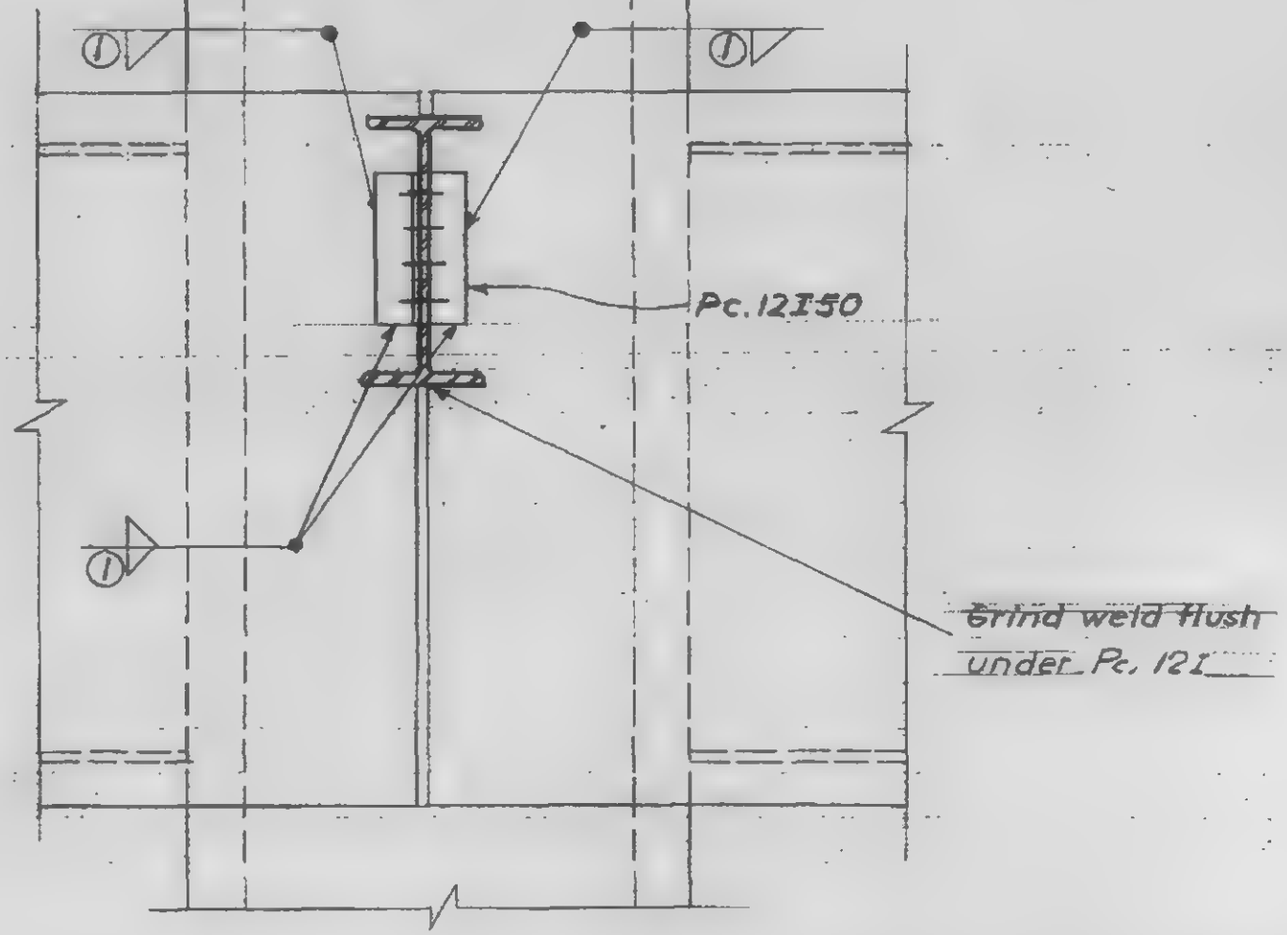

Section a-a

LICENSED PROFESSIONAL ENGINEER
LESLIE E. ROBERTSON
No. 34360
UNIVERSITY OF THE STATE OF NEW YORK

1-AB3-17

SKILLING - HELLE - CHRISTIANSEN - ROBERTSON — Structural & Civil Engineers

PROJECT THE WORLD TRADE CENTER | TITLE CONNECTION DETAIL 767A-N : 768A,C,D: 770A-E | DATE 9-1-67

REVISIONS
2-19-68
7-17-68

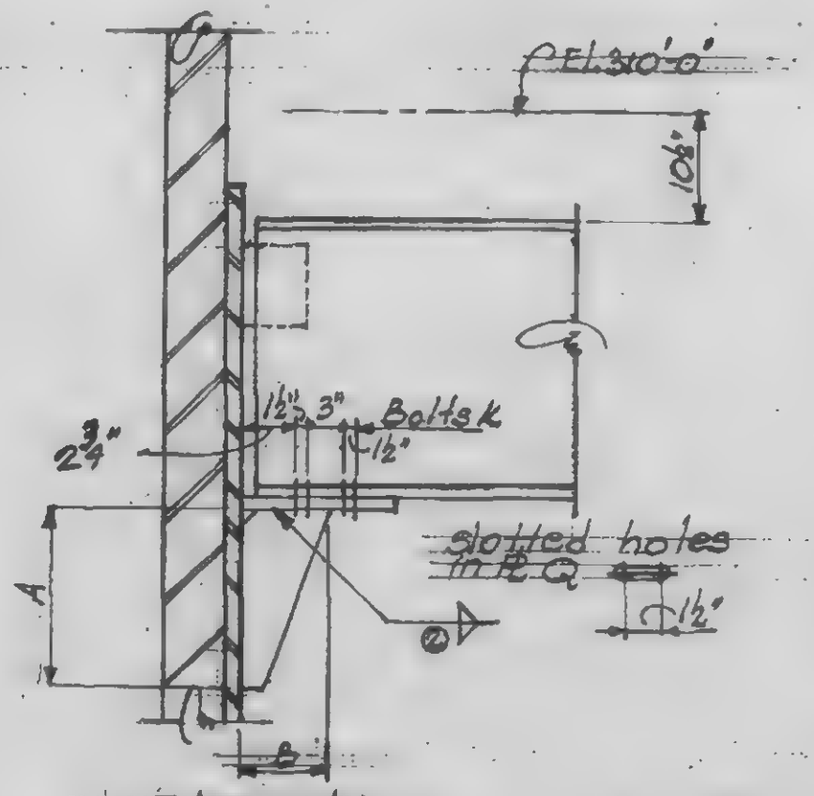

Elevation

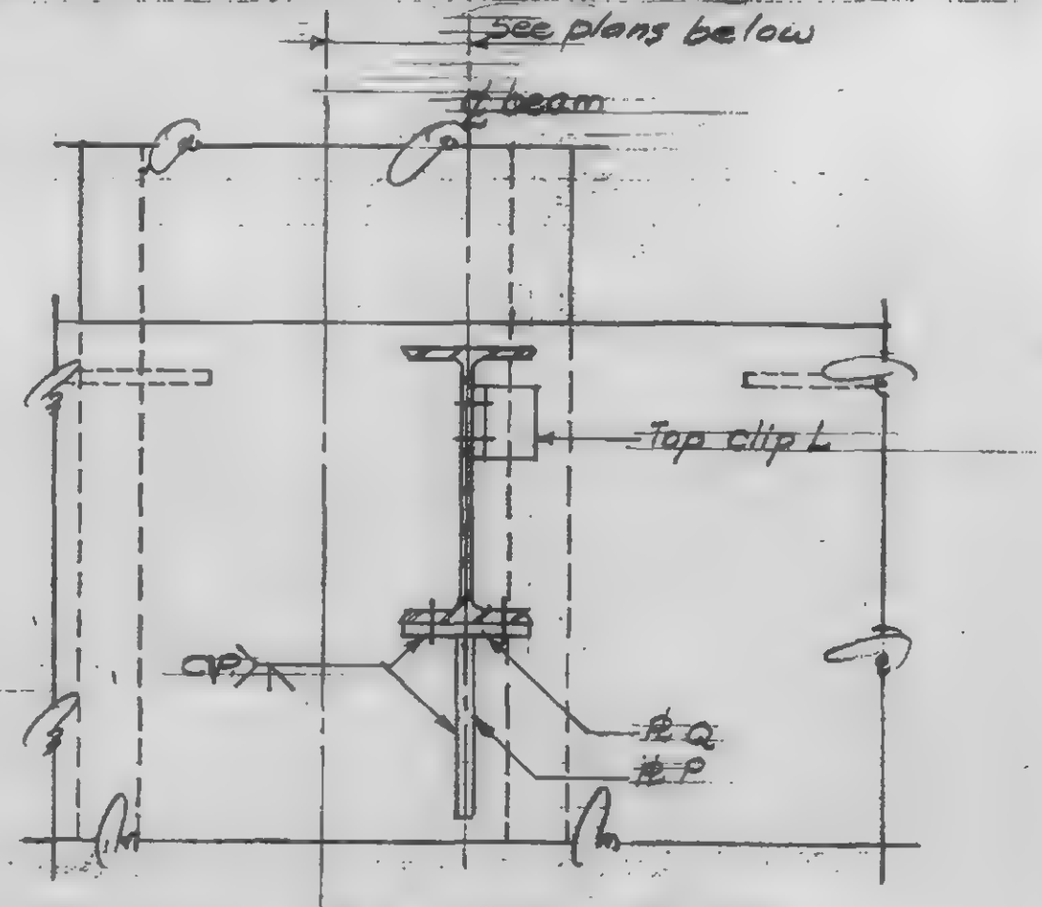

Section a-a

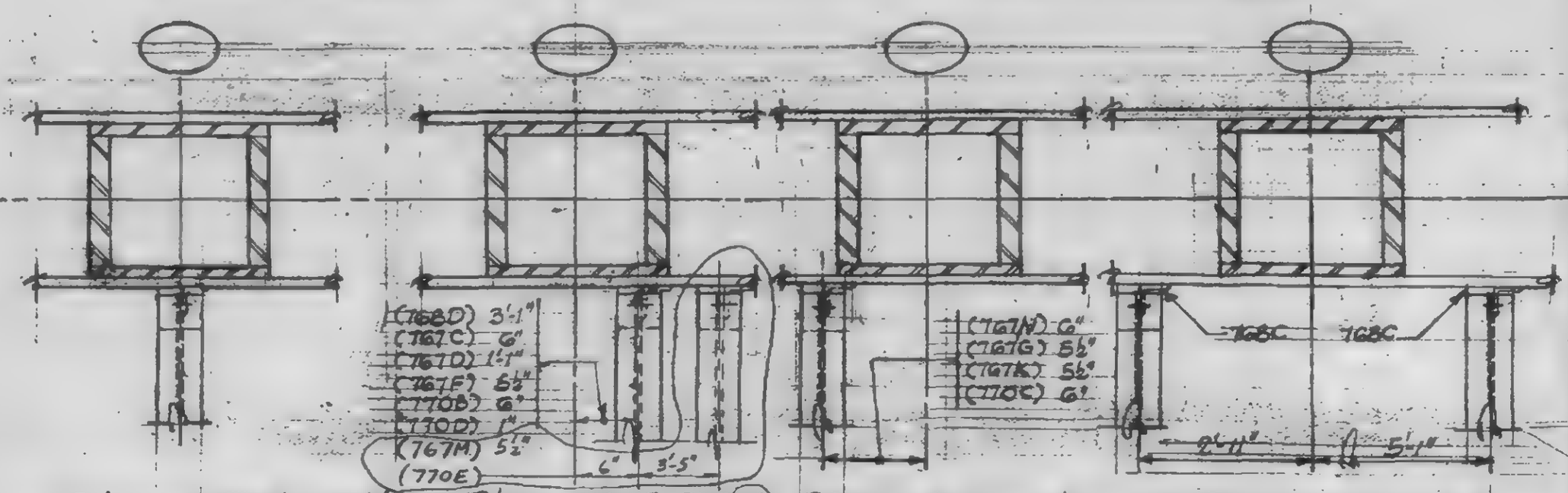

Plan 767A,B,C,D
Plan 770A

Plan 767C,D,F,M
Plan 770B,D,E
Plan 768D

Plan 767N,G,K
Plan 770C

Plan 768C

1-AB3-18

LICENSED PROFESSIONAL ENGINEER
LESLIE E. ROBERTSON
No. 54360
UNIVERSITY OF THE STATE OF NEW YORK

SKILLING - HELLE - CHRISTIANSEN - ROBERTSON Structural & Civil Engineers

PROJECT THE WORLD TRADE CENTER | TITLE SCHEDULE FOR DETAIL 767 A-N, 768 A,C,D, 770 A-E | DATE 9-1-67

REVISIONS
2-9-68
7-17-68

	767 A,C,F & G	767 B & N	768 A,C,D	770 A,B,C,D,E	767 D,H,K & M	767 E
PLATES						
P	5/8"	5/8"	1/2"	1/2"	3/4"	1"
Q	5/8"	5/8"	1/2"	1/2"	3/4"	1"
DIMENSIONS						
A	0'-10"	0'-11"	0'-11"	0'-10"	1'-0"	1'-2"
B	0'-4 1/2"	0'-4 1/2"	0'-4 1/2"	0'-4 1/2"	0'-4 1/2"	0'-6"
BOLTS						
K	4 - 1 1/8" ϕ	4 - 7/8" ϕ	4 - 3/4" ϕ	4 - 7/8" ϕ	4 - 1 1/8" ϕ	4 - 7/8" ϕ
WELDS						
②	5/16	5/16	5/16	5/16	5/16	3/8

LICENSED PROFESSIONAL ENGINEER
LESLIE E. ROBERTSON
No. 34360
UNIVERSITY OF THE STATE OF NEW YORK

1-AB3-18.1

SKILLING - HELLE - CHRISTIANSEN - ROBERTSON — Structural & Civil Engineers

PROJECT: THE WORLD TRADE CENTER | TITLE: CONNECTION DETAIL TYP. A,B,C,D,E,F,G & H | DATE: 1-10-68

REVISIONS
2-19-68

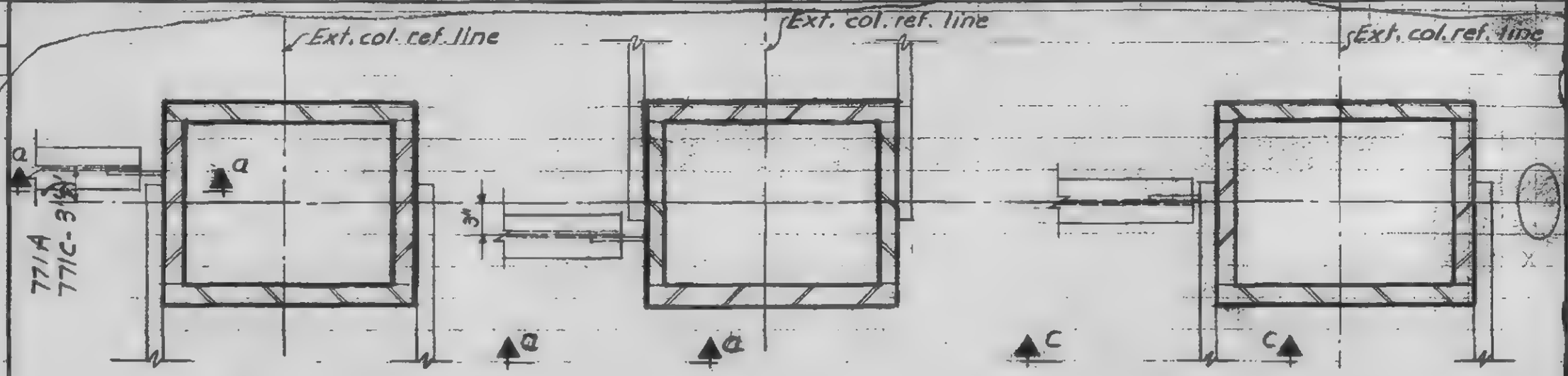

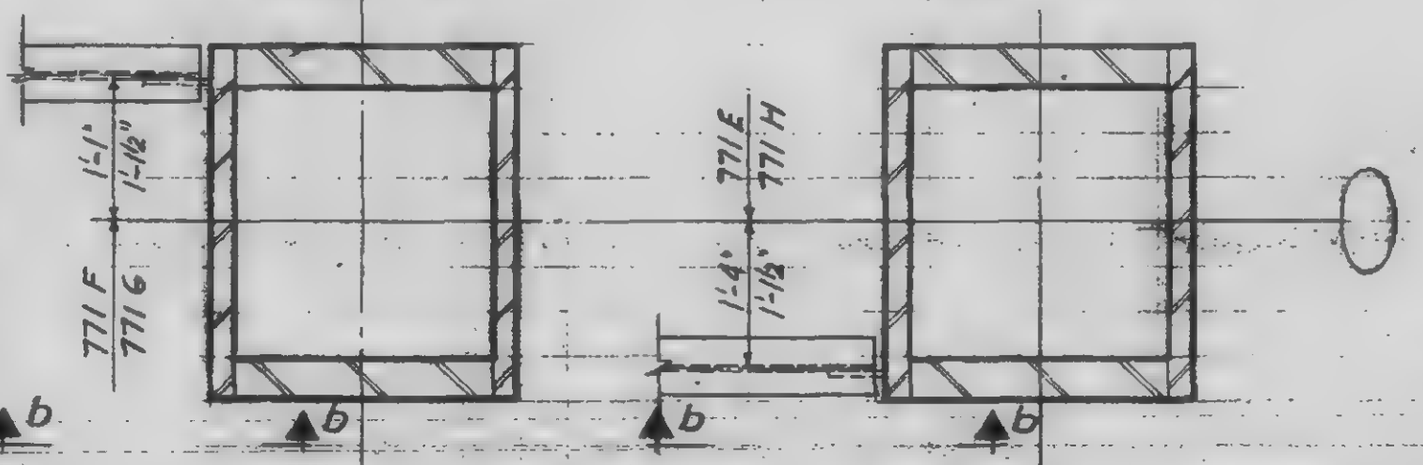

SCHEDULE

	#P	BOLTS L
771 A, B	⅜	4 - ⅞" ϕ
771 C	½	6 - ¾" ϕ
771 D	⅜	4 - 1" ϕ
771 E, F, G, H	⅜	4 - ⅞ ϕ

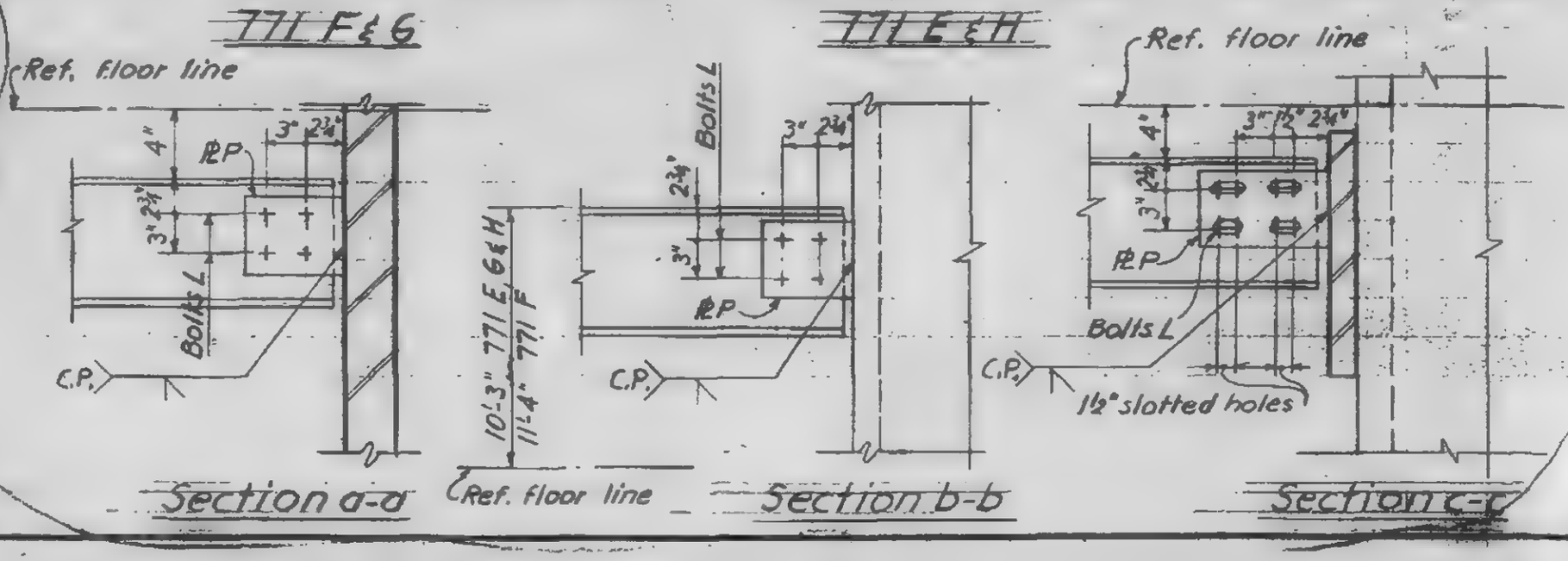

LICENSED PROFESSIONAL ENGINEER
LESLIE E. ROBERTSON
NEW YORK

1-AB3-18.2

PROJECT THE WORLD TRADE CENTER | TITLE CONNECTION DETAIL 852 A | DATE 9-15-67

REVISIONS

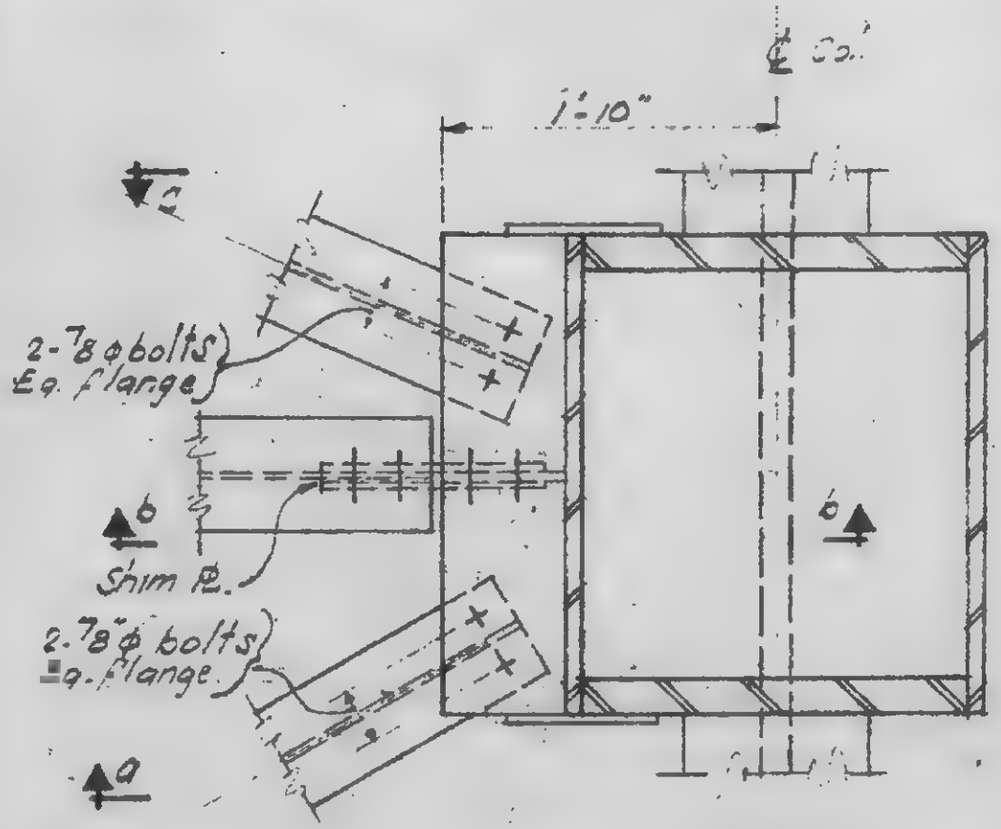

PLAN

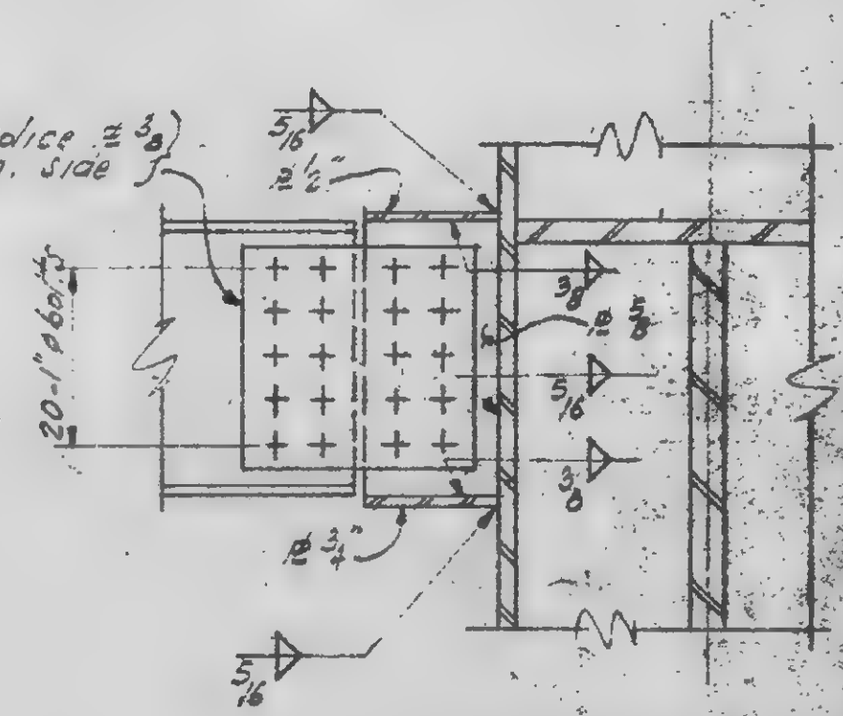

Section b-b

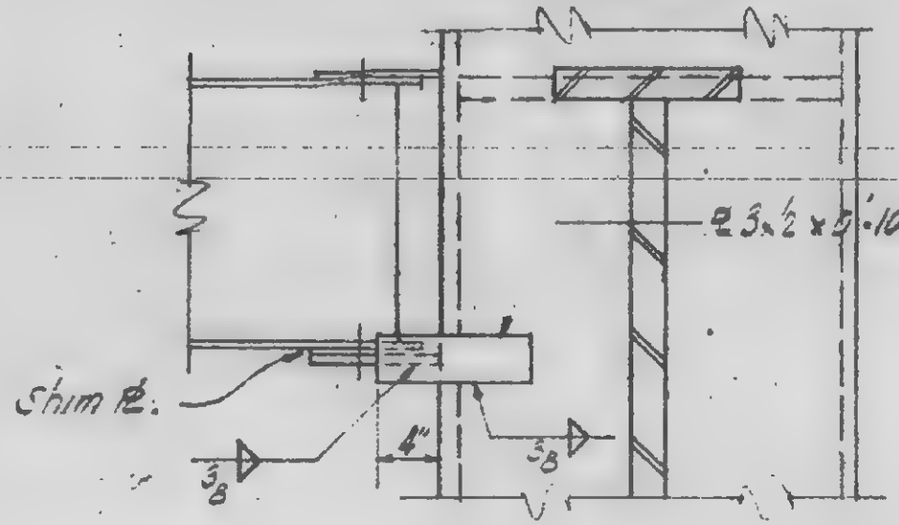

Section a-a

Section c-c, Opp. hand

LESLIE E. ROBERTSON LICENSED PROFESSIONAL ENGINEER No. 34360 STATE OF NEW YORK

1-A63-28

SKILLING - HELLE - CHRISTIANSEN - ROBERTSON — Structural & Civil Engineers

PROJECT THE WORLD TRADE CENTER | TITLE CONNECTION DETAIL 852 B | DATE 9-15-67

REVISIONS

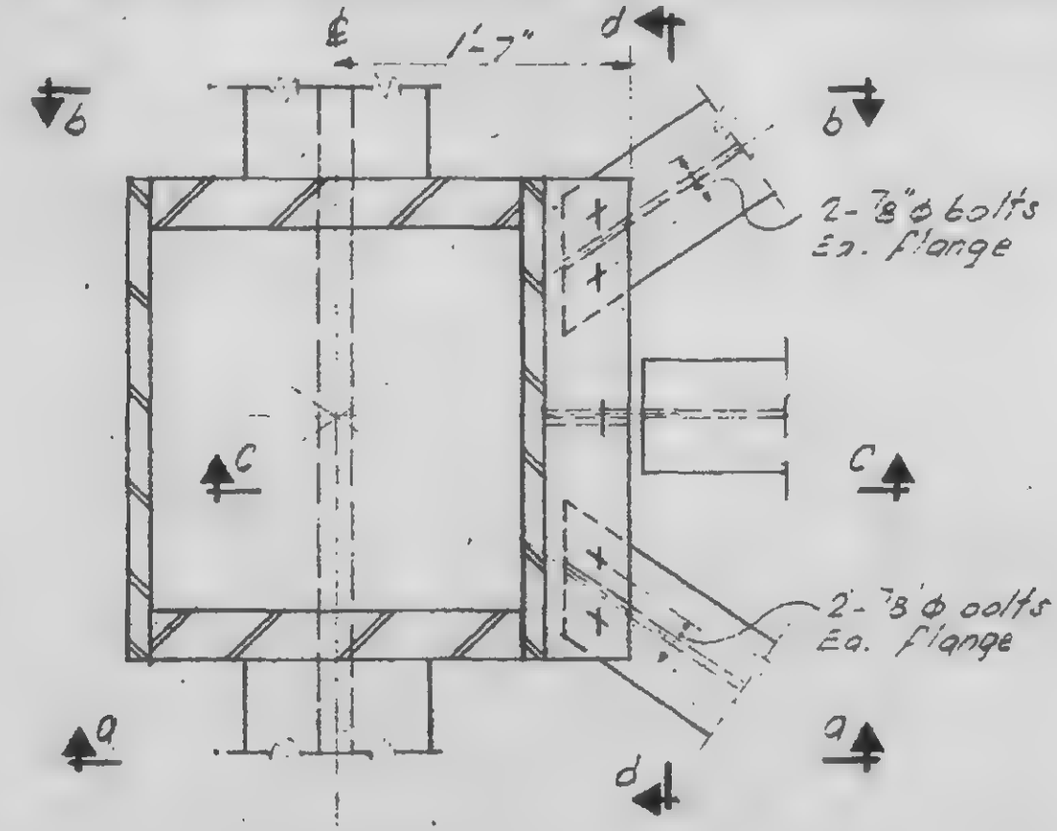

PLAN

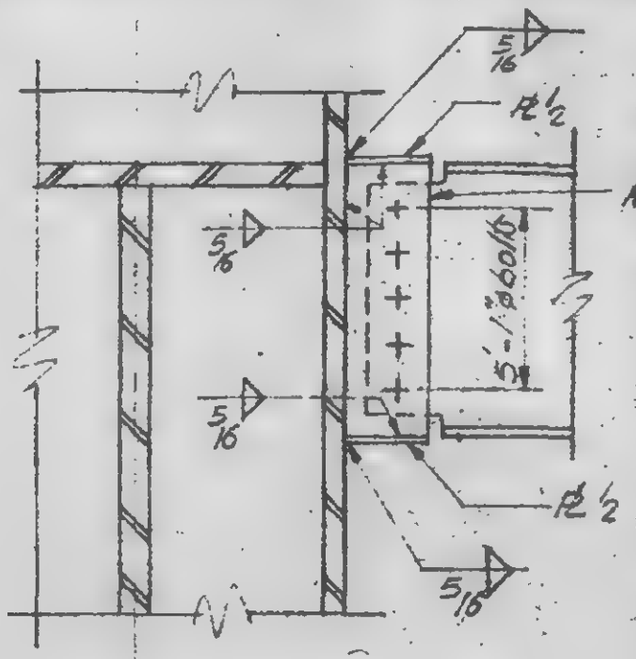

Section c-c

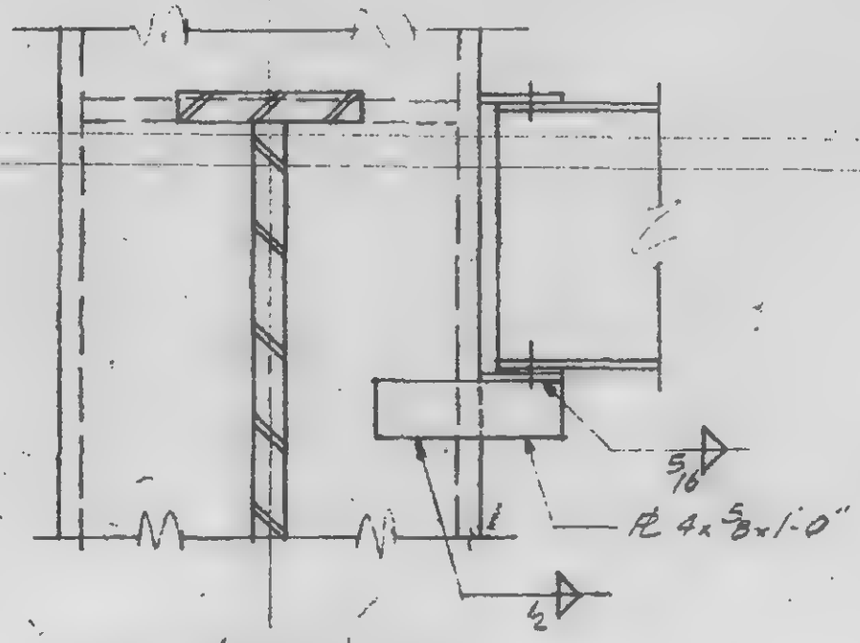

Section a-a
Section b-b, Opp. hand

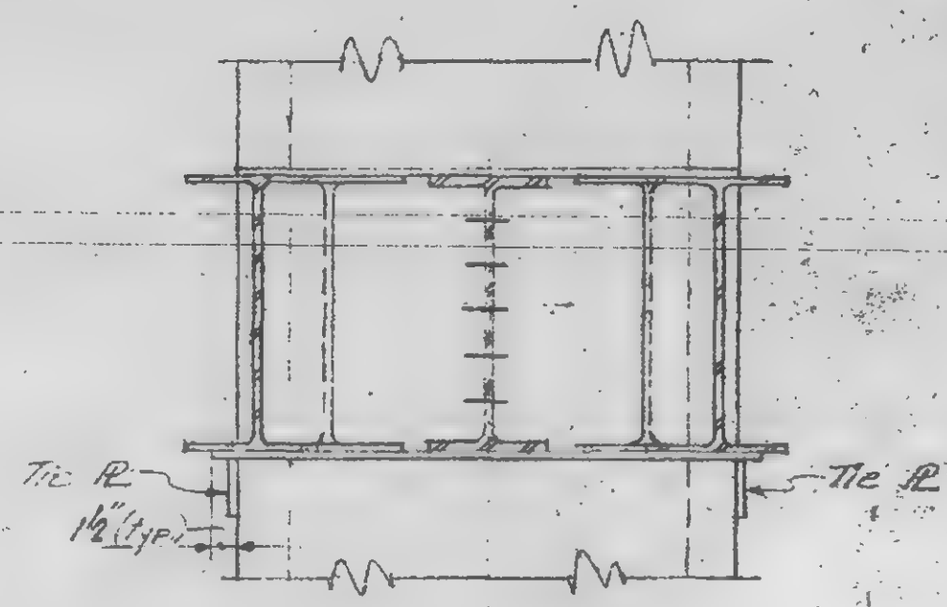

Section d-d

LICENSED PROFESSIONAL ENGINEER — LESLIE E. ROBERTSON — No. 34360 — UNIVERSITY OF THE STATE OF NEW YORK

1-A83-28.1

SKILLING - HELLE - CHRISTIANSEN - ROBERTSON Structural & Civil Engineers

PROJECT THE WORLD TRADE CENTER | TITLE CONNECTION DETAIL 778 A & B | DATE 2-19-68

REVISIONS

R

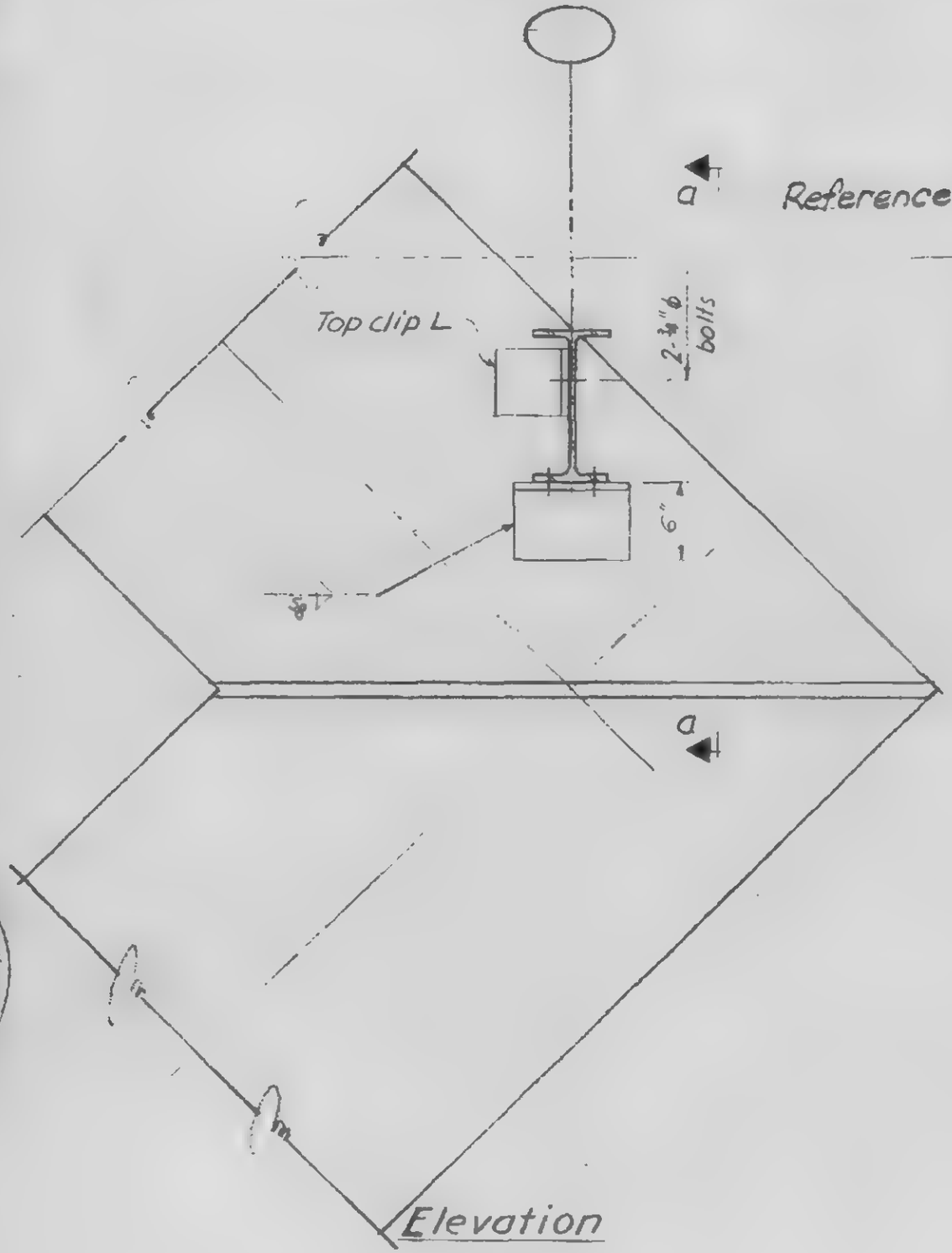

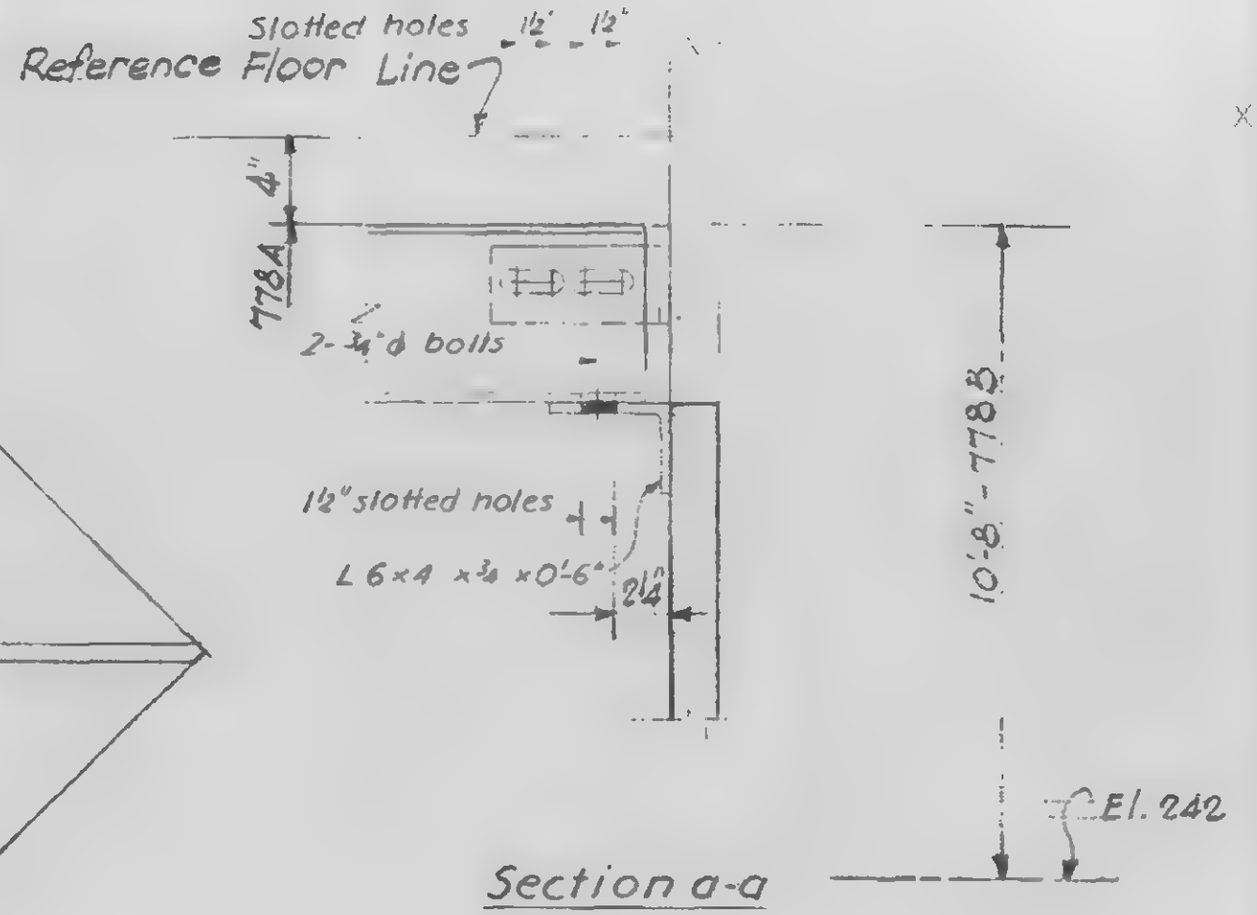

Section a-a

LICENSED PROFESSIONAL ENGINEER
LESLIE E. ROBERTSON
No. 34360
UNIVERSITY OF THE STATE OF NEW YORK

1-AB3-41

SKILLING - HELLE - CHRISTIANSEN - ROBERTSON Structural & Civil Engineers

PROJECT THE WORLD TRADE CENTER | TITLE CONNECTION DETAIL 779 A | DATE 2-19-68

EVISIONS

5-7-68

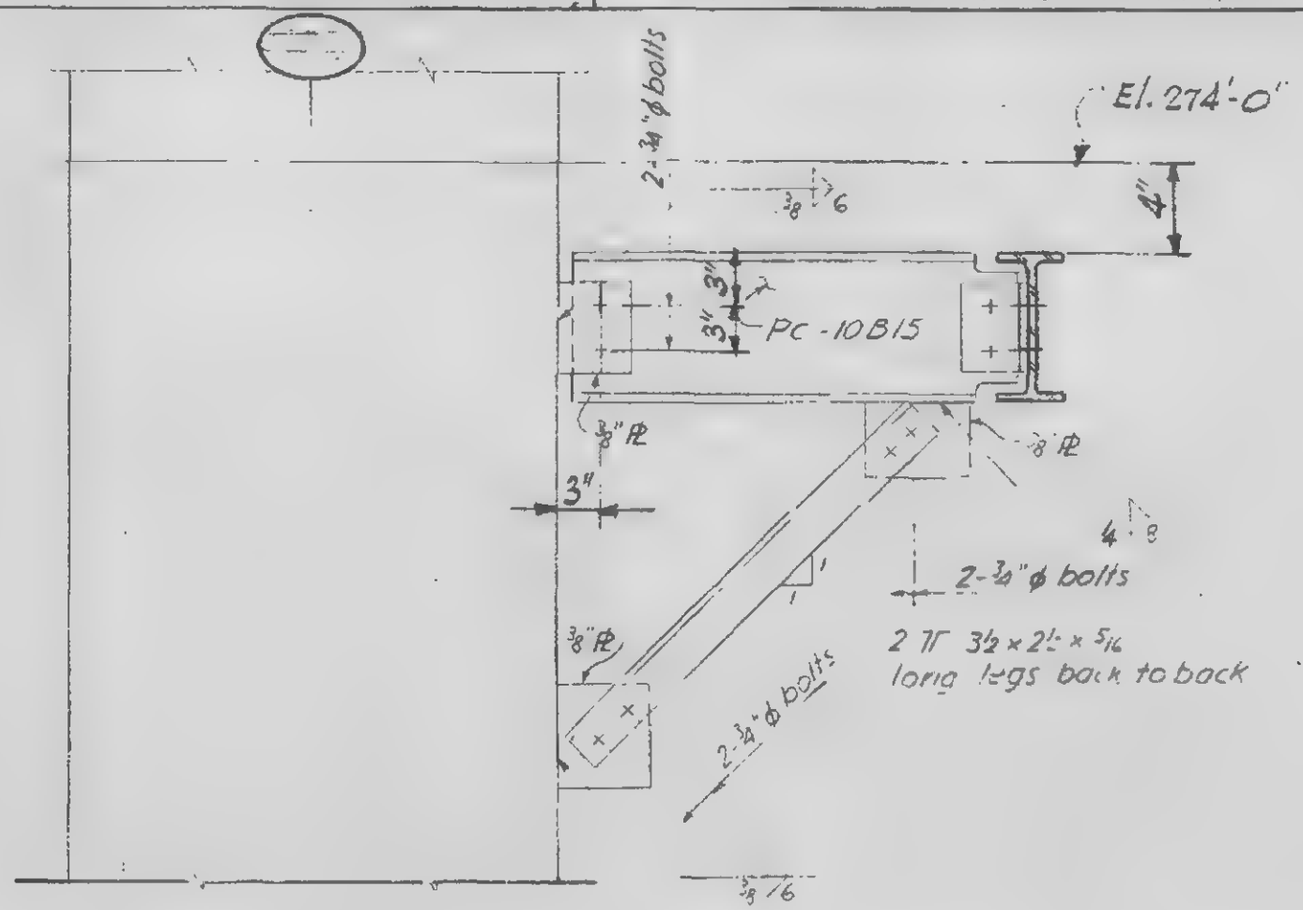

Section a-a

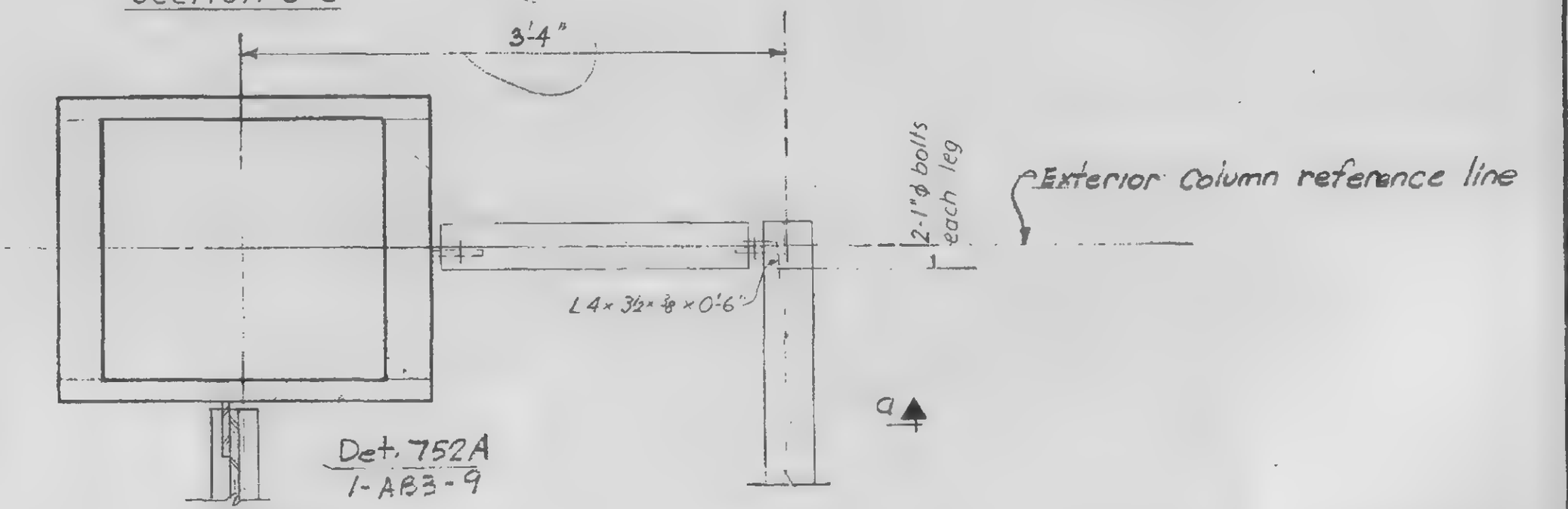

Plan

1"

1-AB3-42

LICENSED PROFESSIONAL ENGINEER
LESLIE E. ROBERTSON
No. 34360
UNIVERSITY OF THE STATE OF NEW YORK

SKILLING - HELLE - CHRISTIANSEN - ROBERTSON Structural & Civil Engineers

PROJECT THE WORLD TRADE CENTER | TITLE CONNECTION DETAIL P02A-E | DATE 9-1-67

REVISIONS
1-10-68

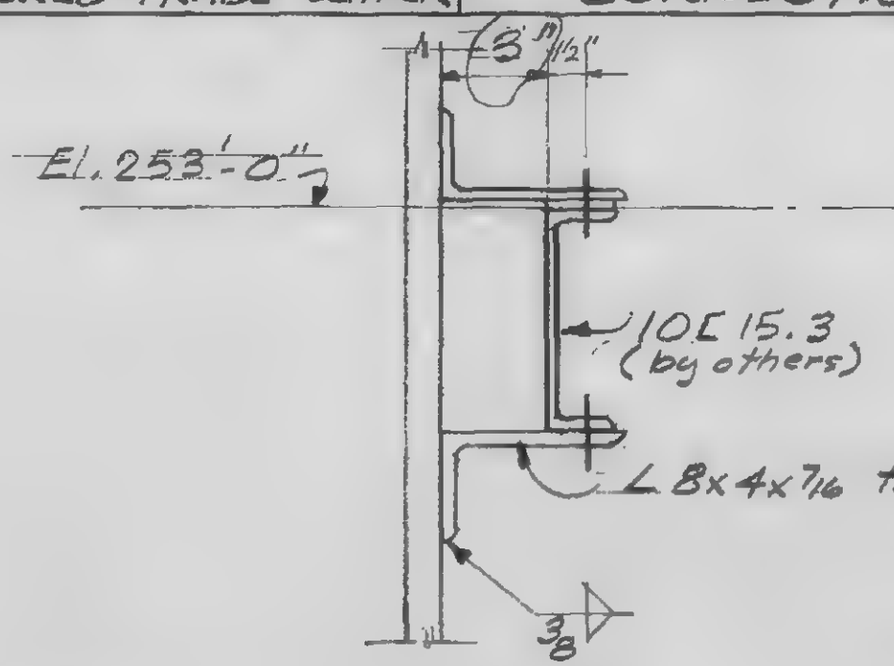

Section P02 A, C & D

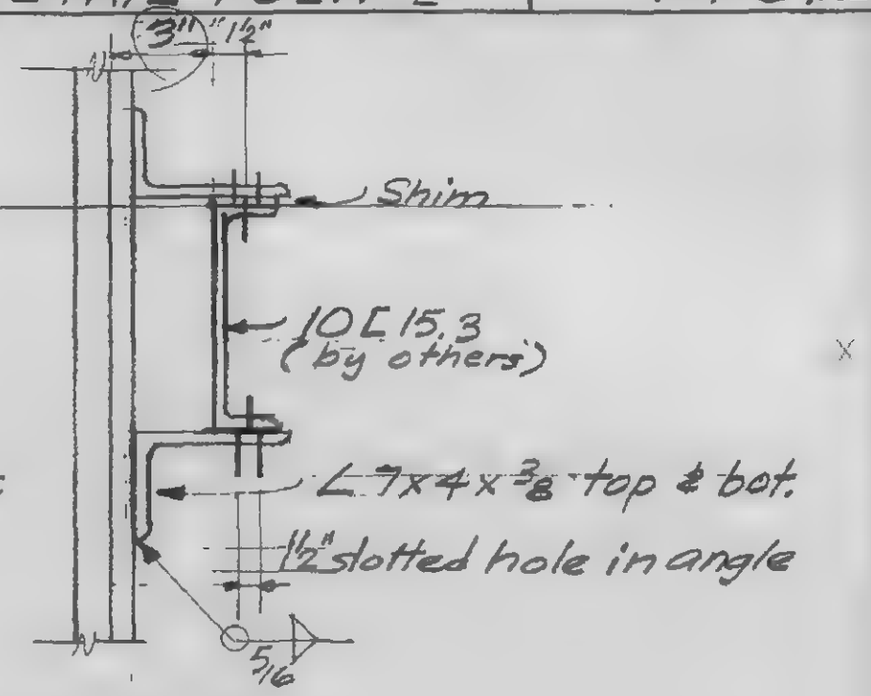

Section P02 B

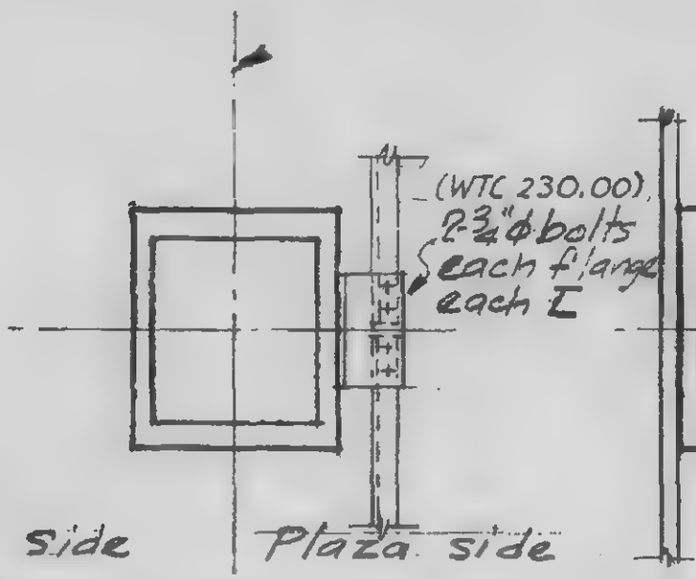

Plan P02 A

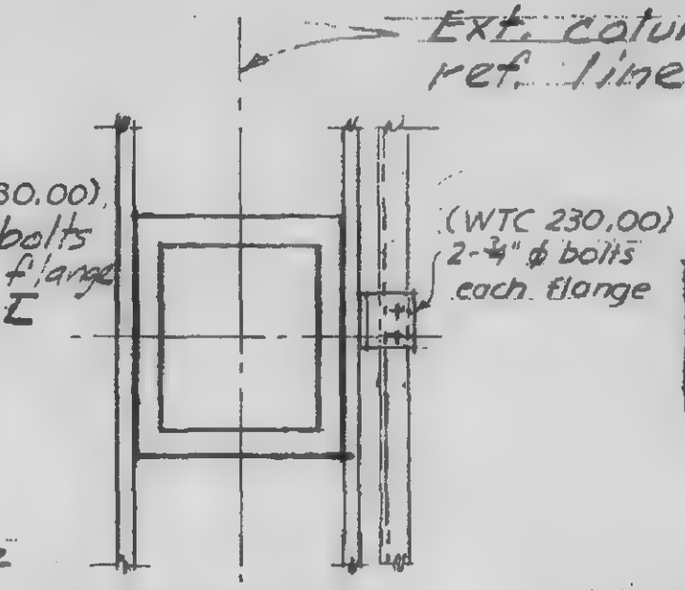

Plan P02 B

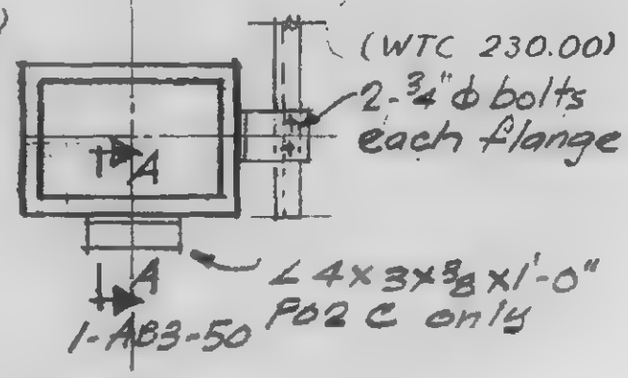

Plan P02 C
Plan P02 D
Plan P02 E

LICENSED PROFESSIONAL ENGINEER
LESLIE E. ROBERTSON
No. 34360
UNIVERSITY OF THE STATE OF NEW YORK

1-AB3-51

SKILLING · HELLE · CHRISTIANSEN · ROBERTSON — Structural & Civil Engineers

PROJECT THE WORLD TRADE CENTER | TITLE CONNECTION DETAIL POS A-D | DATE 9-1-67

REVISIONS
1-10-68

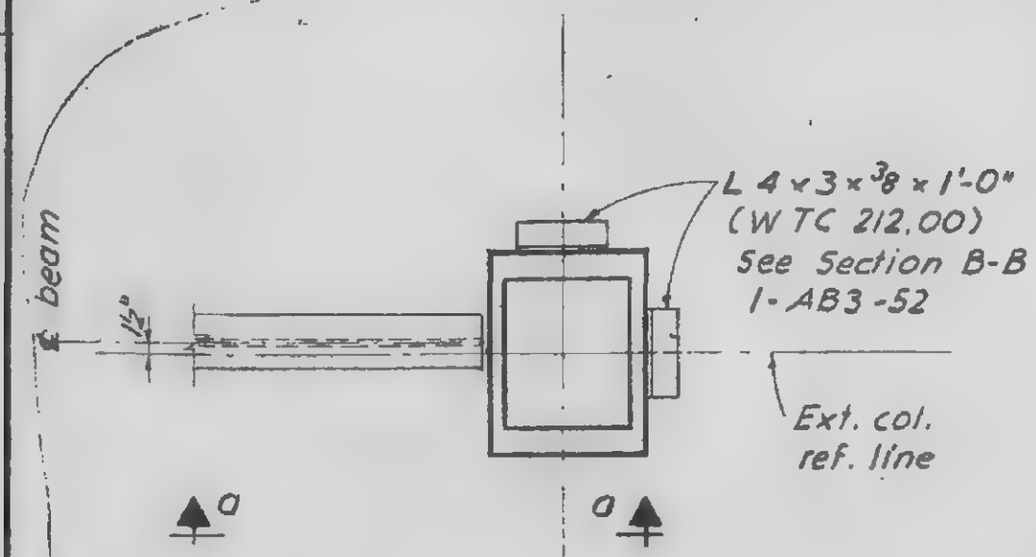

Plan

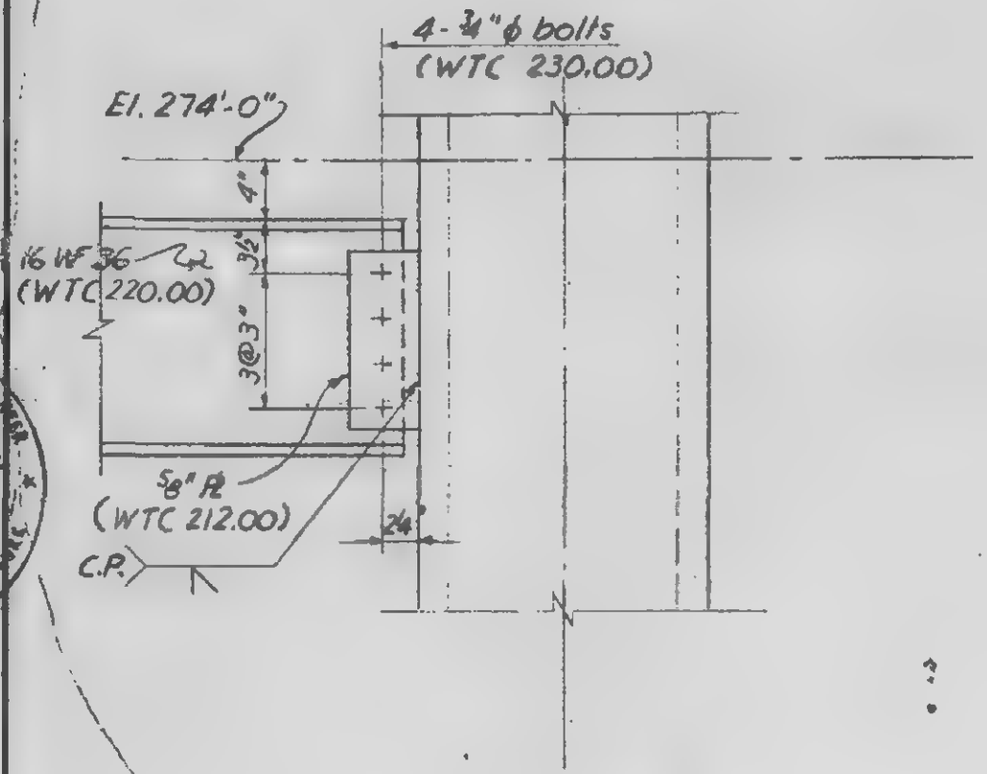

Section a-a

POS C

Note: POS A & B VOID

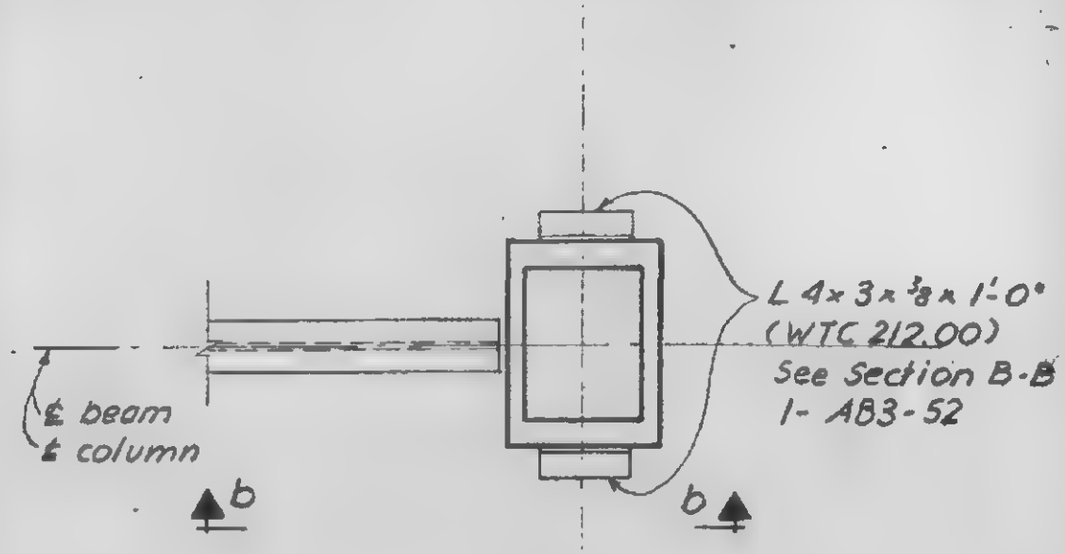

Plan

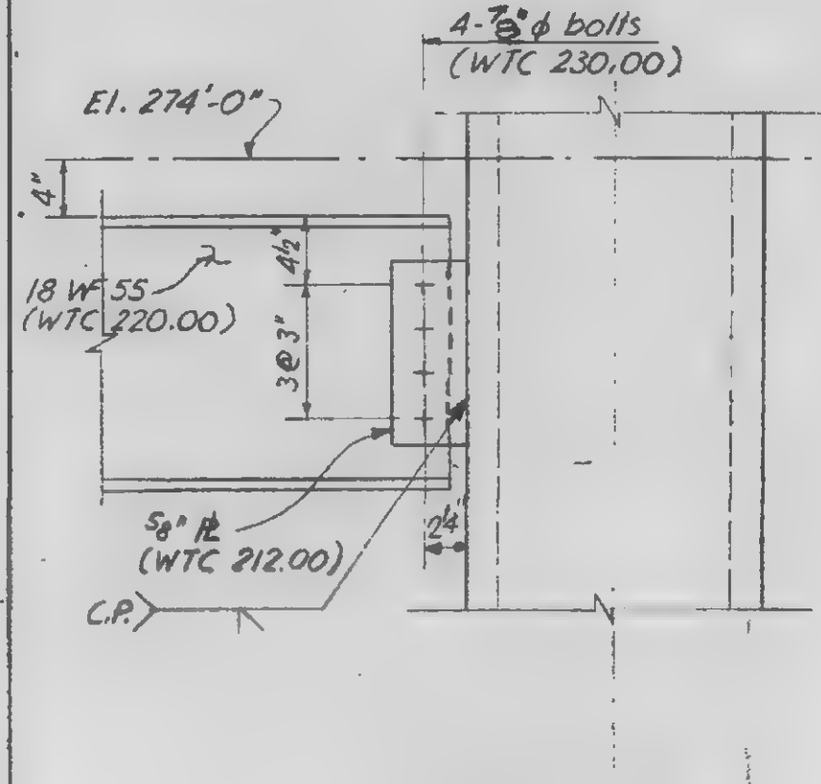

Section b-b

POS D

1-AB3-54

LESLIE E. ROBERTSON — REGISTERED PROFESSIONAL ENGINEER — No. 34360 — STATE OF NEW YORK

SKILLING - HELLE - CHRISTIANSEN - ROBERTSON Structural & Civil Engineers

PROJECT THE WORLD TRADE CENTER | TITLE CONNECTION DETAIL P06 A-F | DATE 9-1-67

REVISIONS
1-10-68
7-17-68

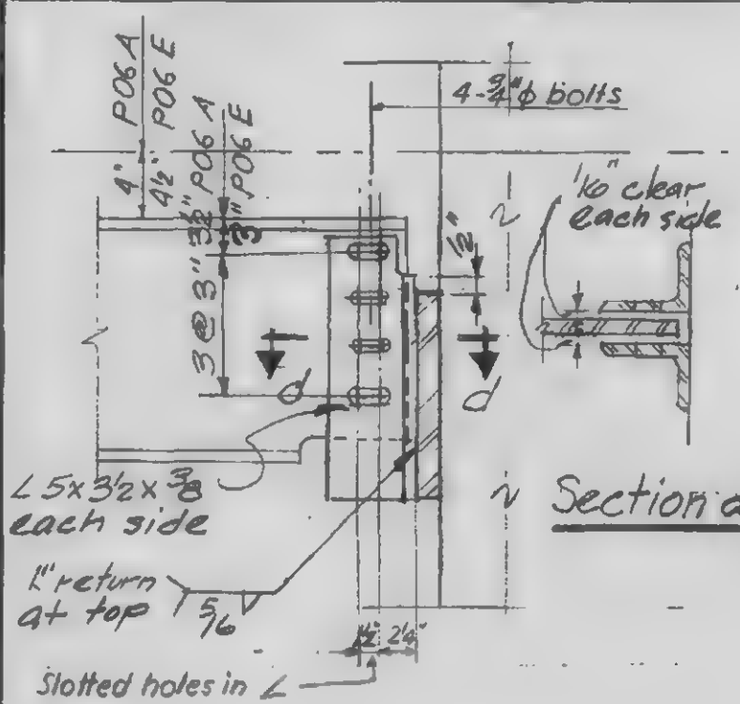

Section d-d

Section a-a

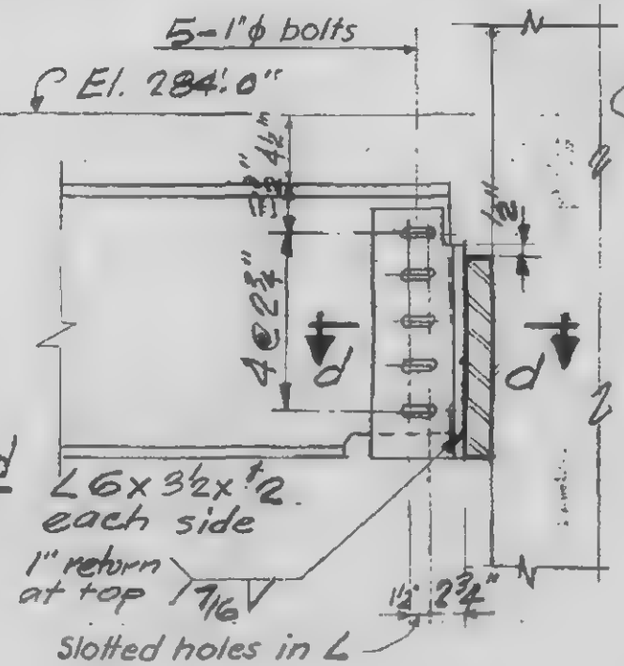

Section b-b

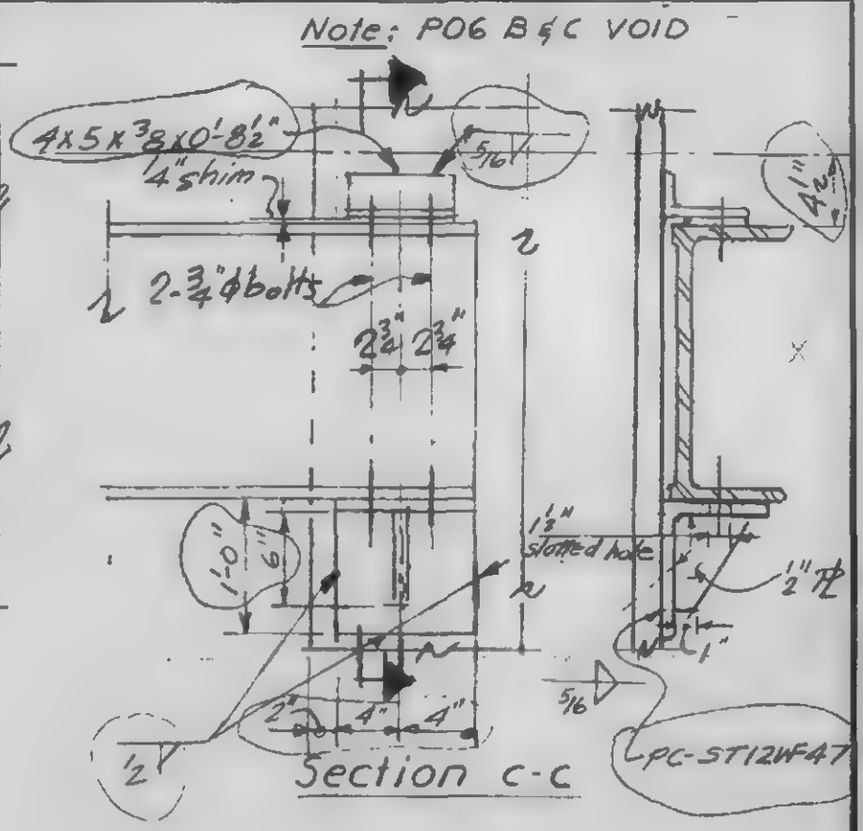

Section c-c

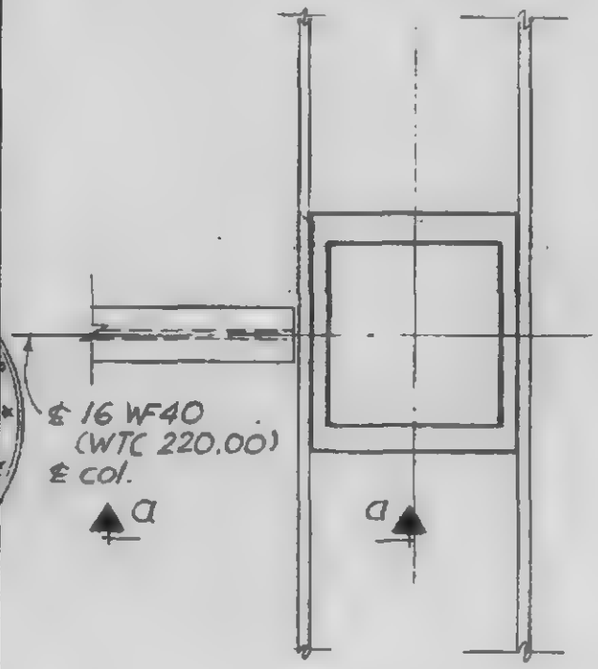

Plan P06 A

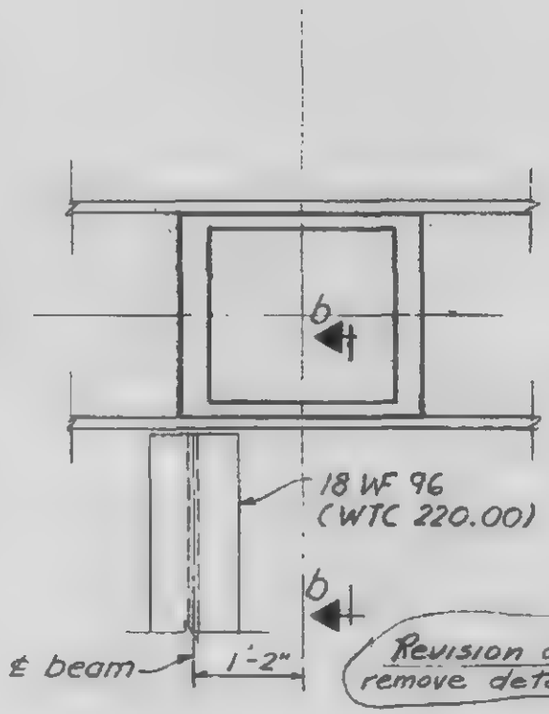

Plan P06 F

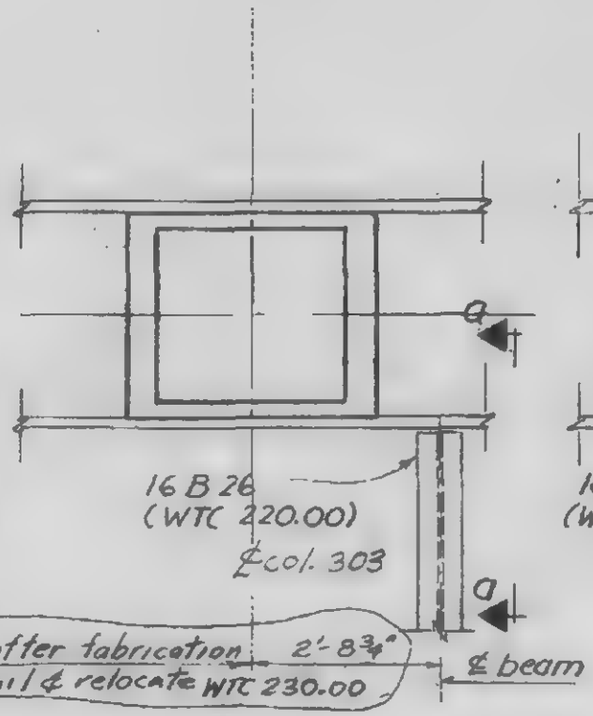

Plan P06 E

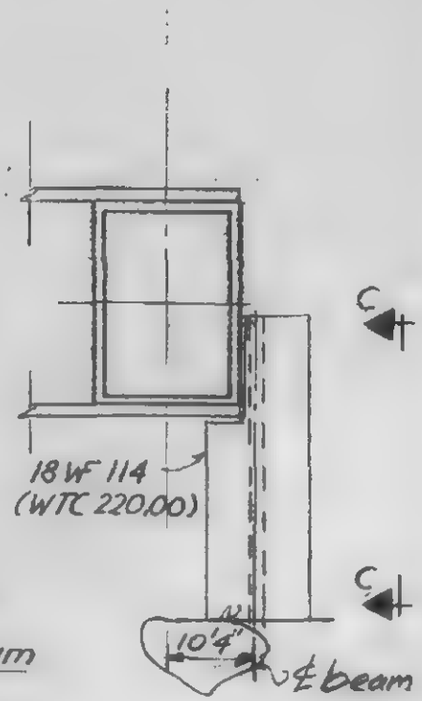

Plan P06 D

LICENSED PROFESSIONAL ENGINEER LESLIE E. ROBERTSON No. 34360 UNIVERSITY OF THE STATE OF NEW YORK

1-AB3-55

SKILLING - HELLE - CHRISTIANSEN - ROBERTSON Structural & Civil Engineers

PROJECT THE WORLD TRADE CENTER | TITLE CONNECTION DETAIL P07 A & B | DATE 9-1-67

EVISIONS

1-10-68

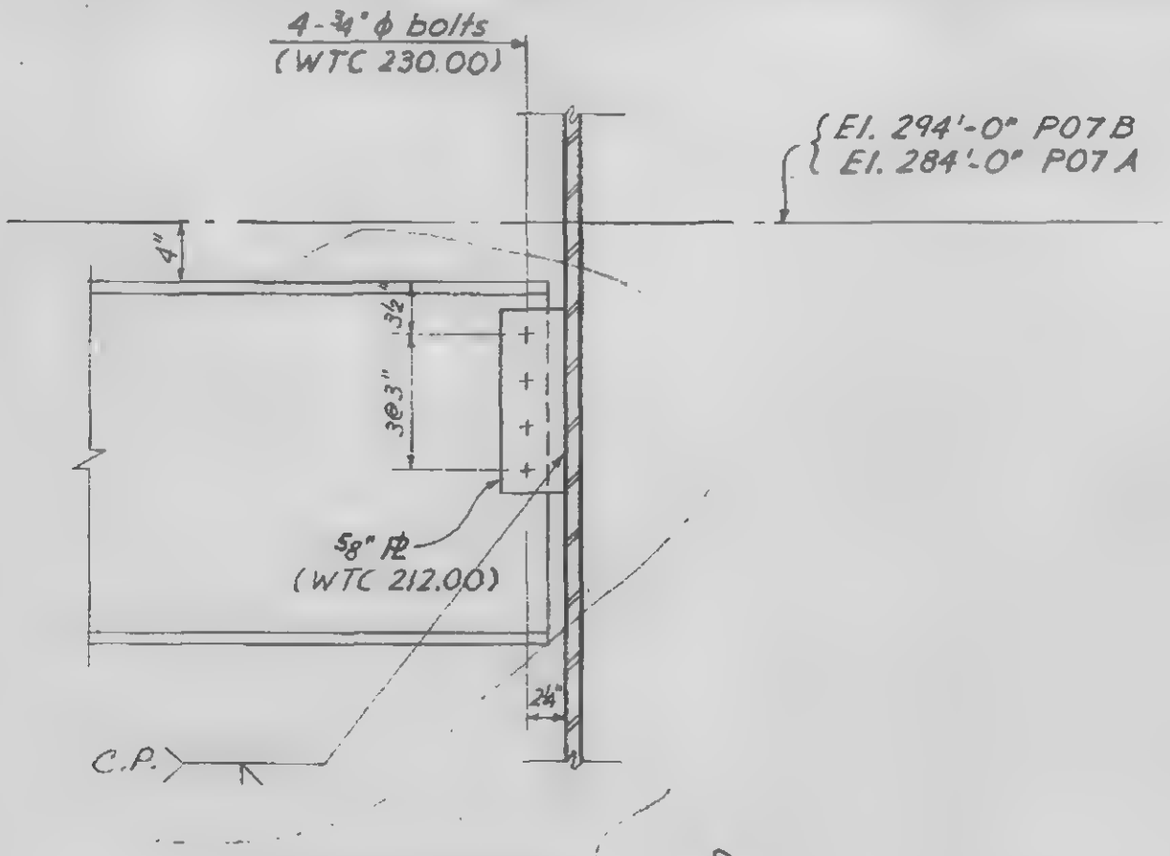

Section a-a

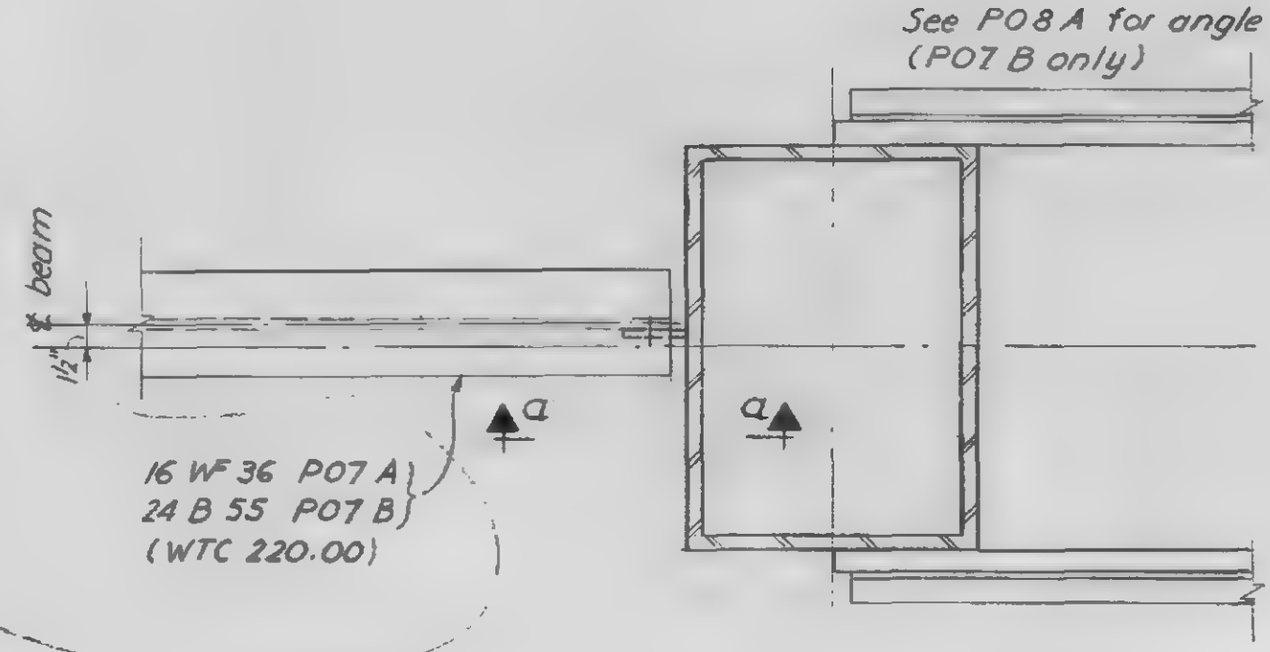

Plan

LICENSED PROFESSIONAL ENGINEER
LESLIE E. ROBERTSON
No. 34360
UNIVERSITY OF THE STATE OF NEW YORK

1-AB3-56

SKILLING - HELLE - CHRISTIANSEN - ROBERTSON Structural & Civil Engineers

PROJECT THE WORLD TRADE CENTER | TITLE CONNECTION DETAIL PDBA & B | DATE 9-1-67

REVISIONS
1-10-68

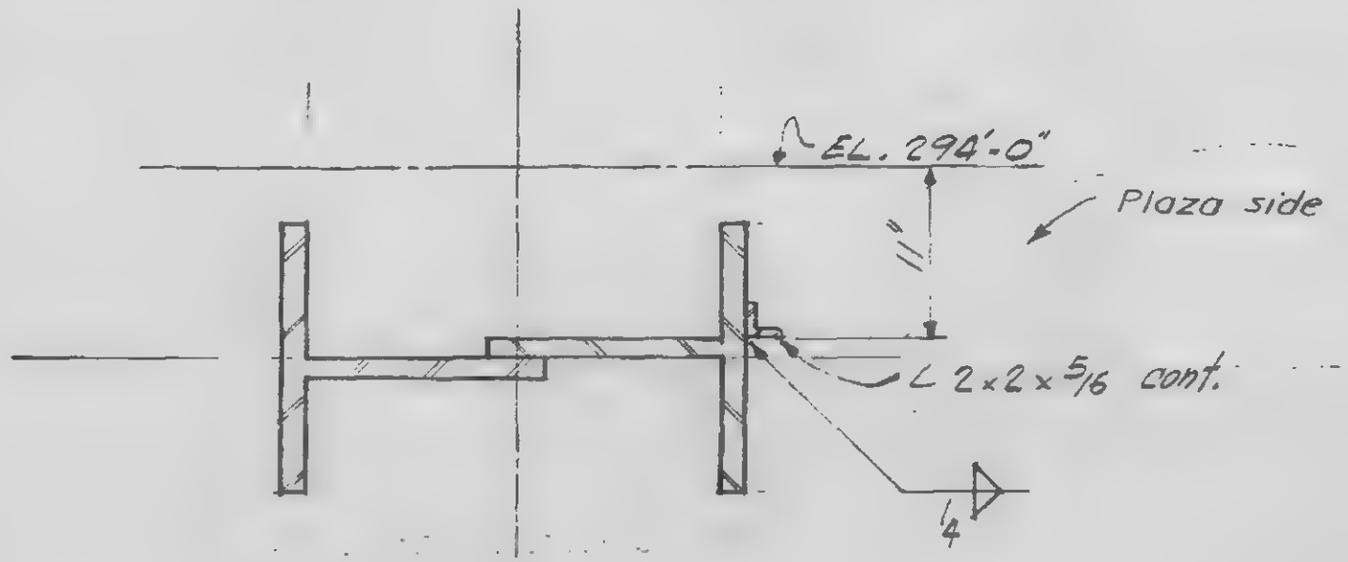

Section a-a

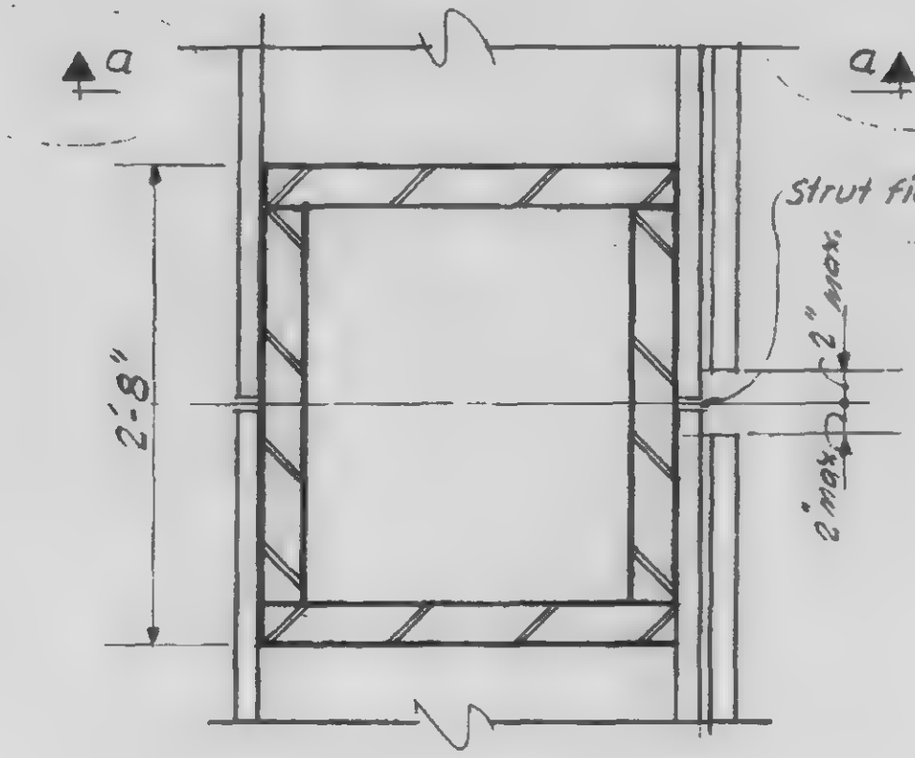

Plan P08 A

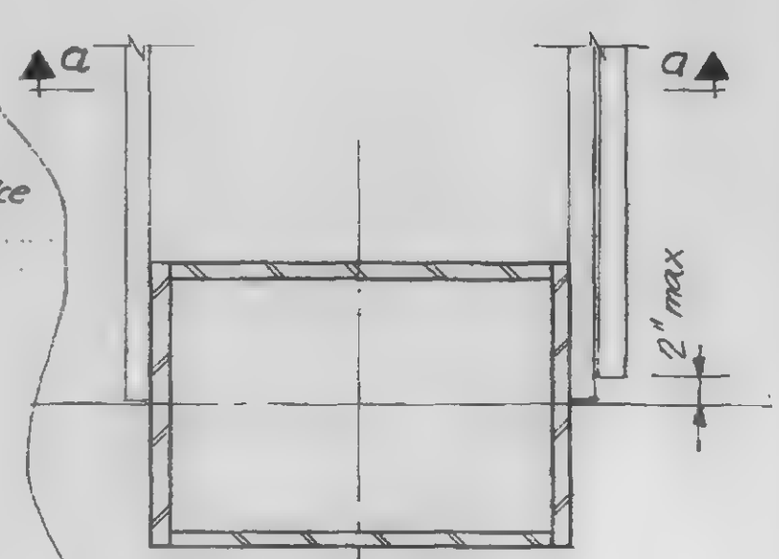

Plan P08 B

1-ABB-57

LICENSED PROFESSIONAL ENGINEER
LESLIE E. ROBERTSON
No. 34360
UNIVERSITY OF THE STATE OF NEW YORK

SKILLING - HELLE - CHRISTIANSEN - ROBERTSON Structural & Civil Engineers

PROJECT THE WORLD TRADE CENTER | TITLE CONNECTION DETAIL PO9C | DATE 1-10-68

REVISIONS

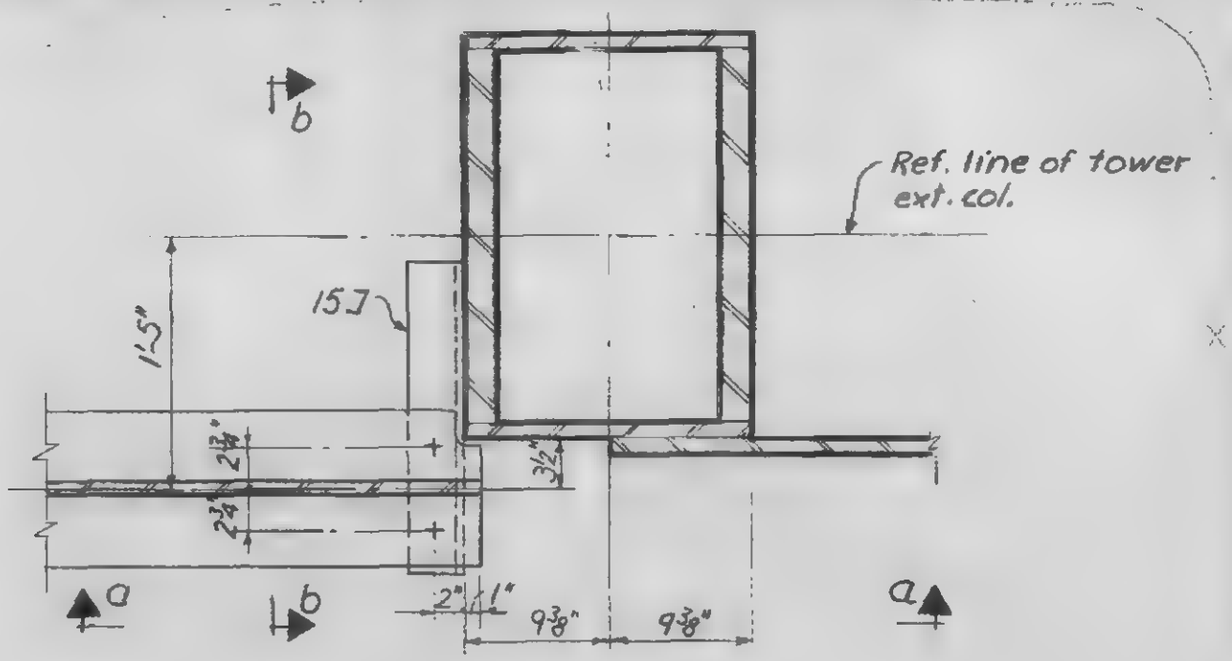

Plan

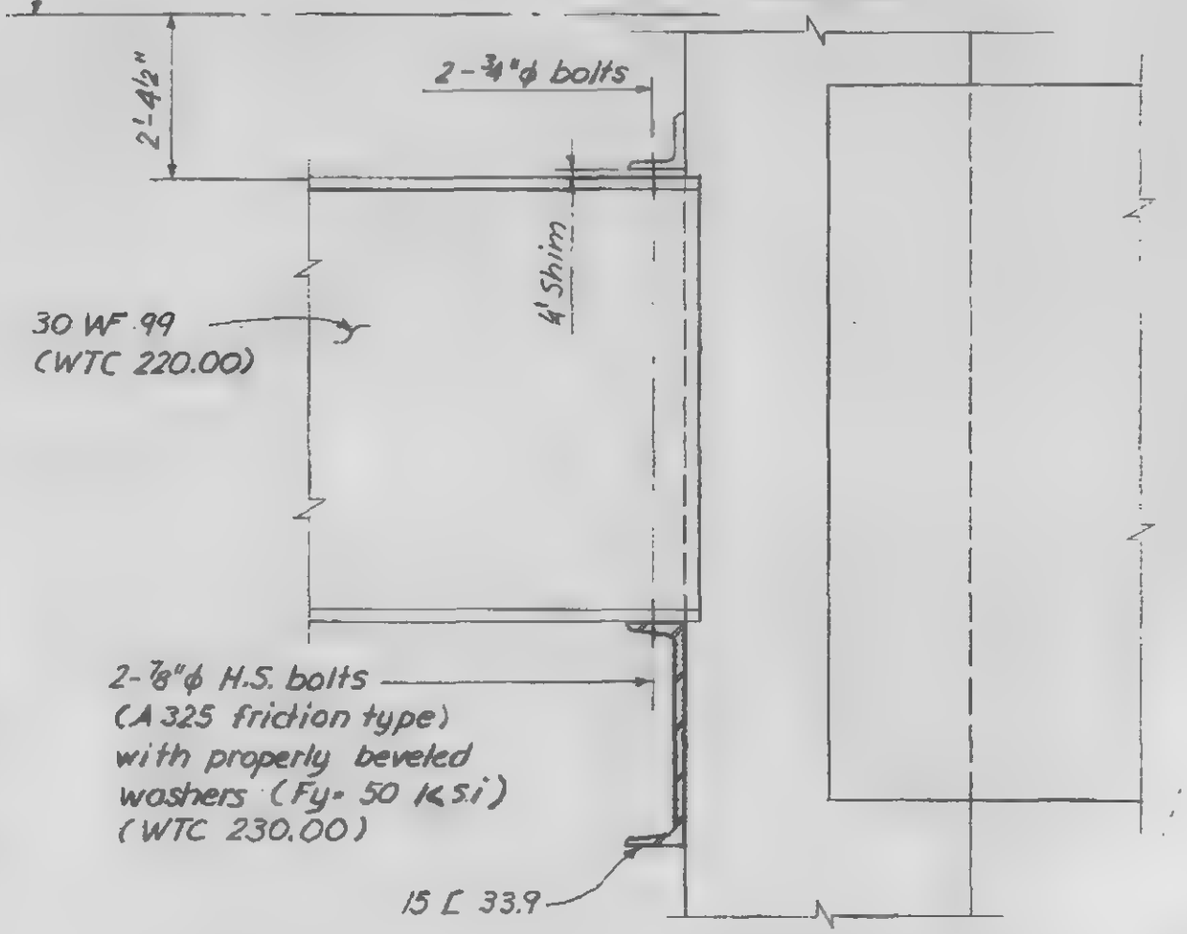

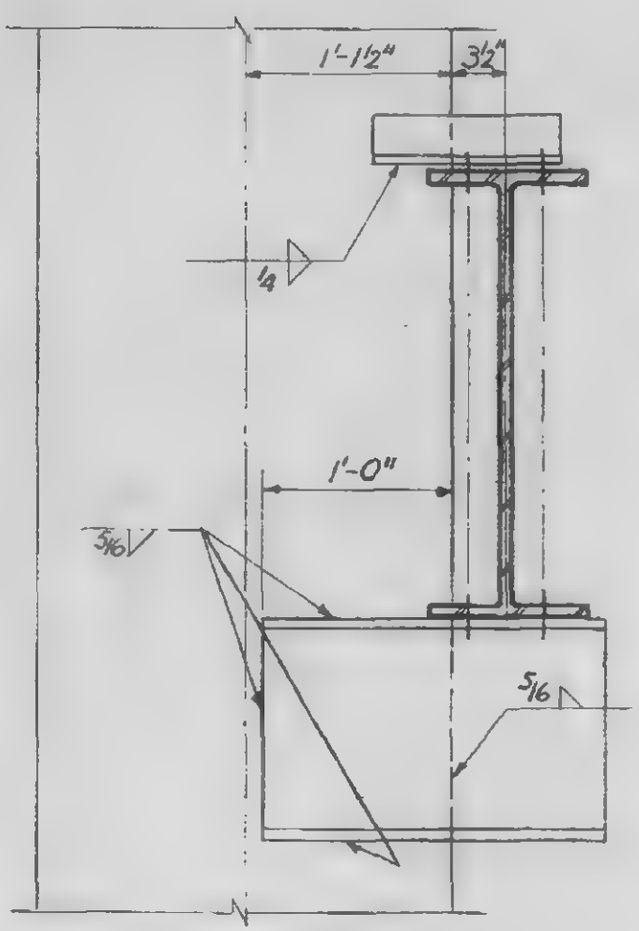

Section b-b

Section a-a

1-AB3-58.2

LICENSED PROFESSIONAL ENGINEER
LESLIE E. ROBERTS
No. 34360
UNIVERSITY OF THE STATE OF N.Y.

SKILLING - HELLE - CHRISTIANSEN - ROBERTSON — Structural & Civil Engineers

PROJECT: THE WORLD TRADE CENTER | TITLE: CONNECTION DETS. P10, P11, P12, P13, P14, P15, P16, P17 | DATE: 9-1-1967

REVISIONS
1-10-68
2-19-68

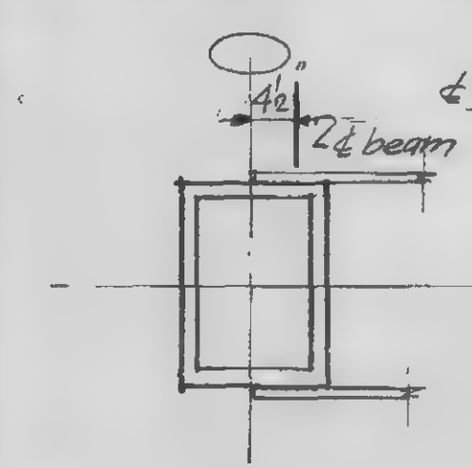

Plan P10A

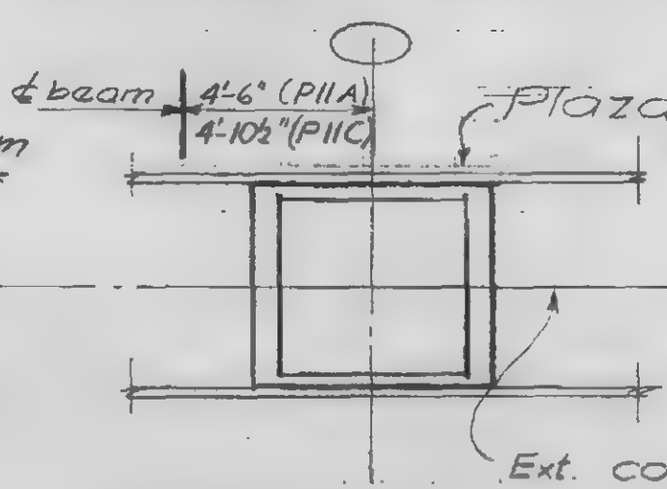

Plan P11A,C

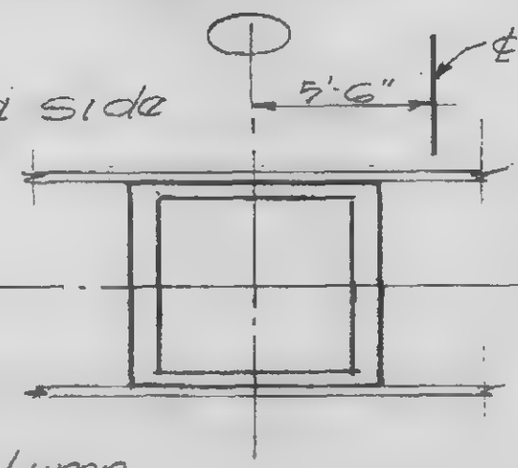

Plan P11B

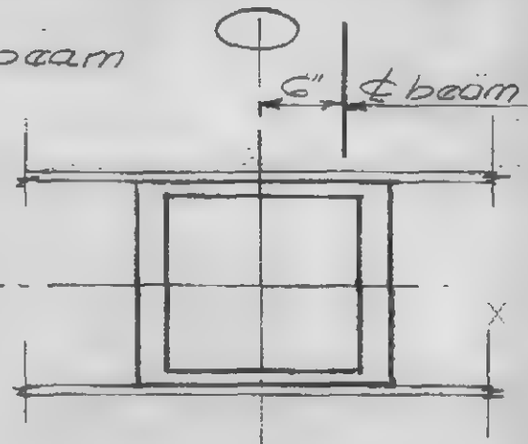

Plan P12A

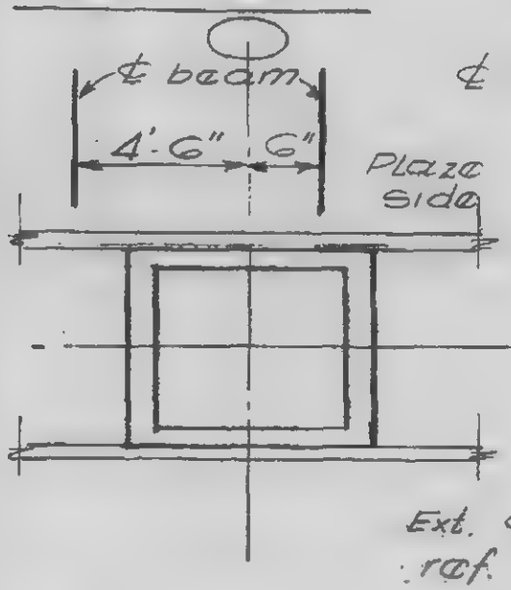

Plan P12B

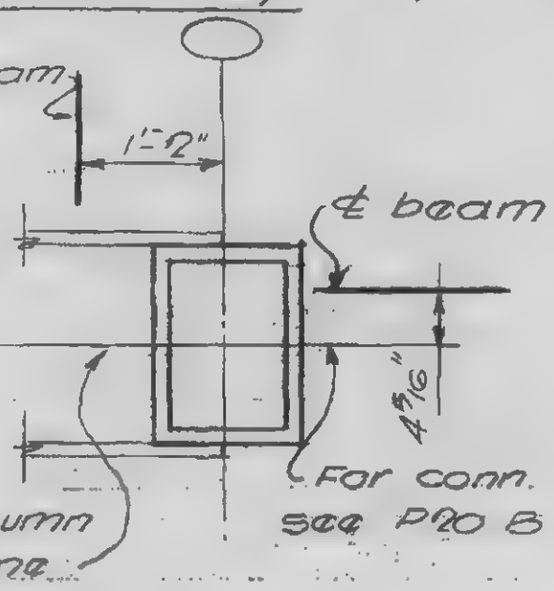

Plan P13A

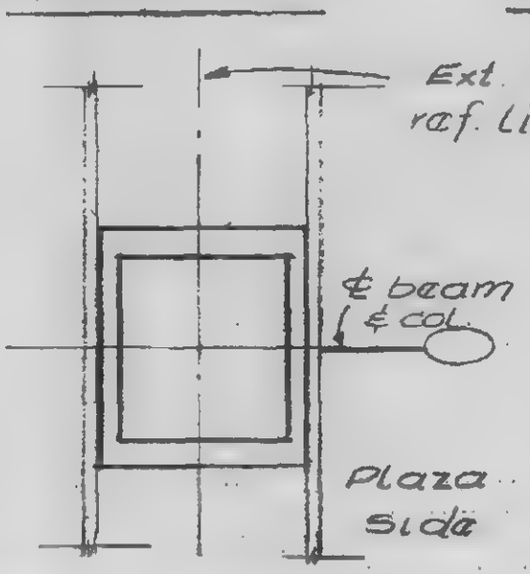

Plan P14A,D

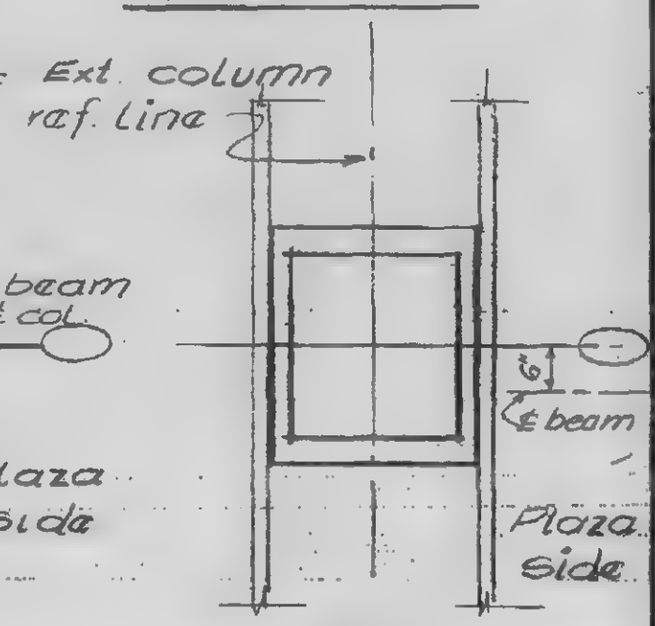

Plan P14B

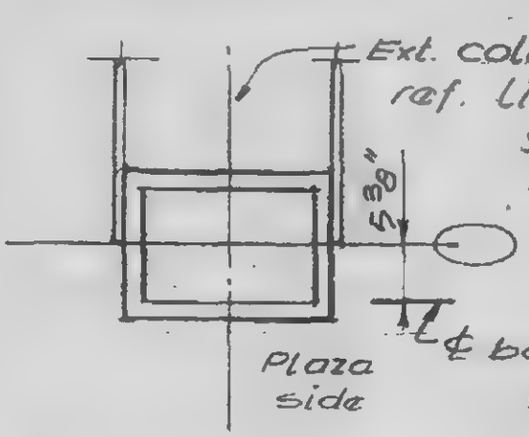

Plan P14C

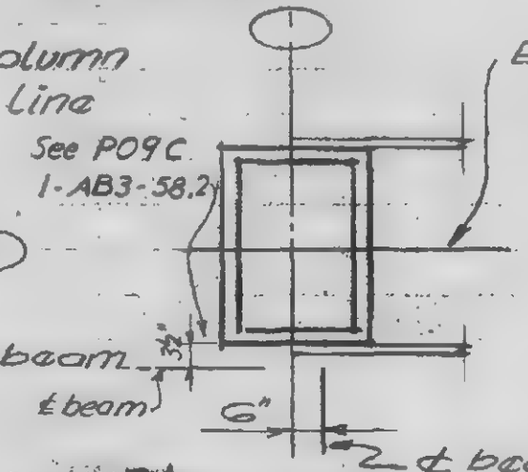

Plan P15A

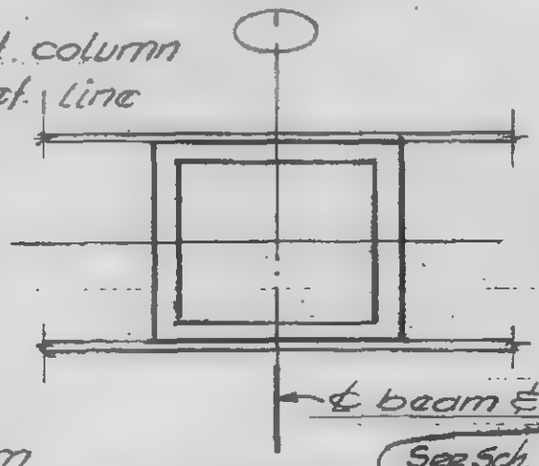

P16A

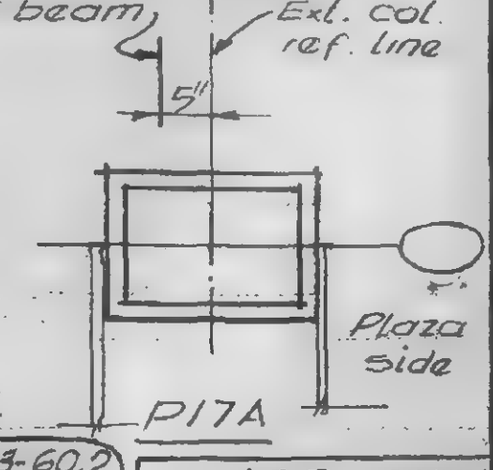

P17A

See Sch. 1-AB3-60.2
See Rev. 1-AB3-60.1

1-AB3-60

LICENSED PROFESSIONAL ENGINEER
LESLIE E. ROBERTSON
No. 34550
UNIVERSITY OF THE STATE OF NEW YORK

SKILLING - HELLE - CHRISTIANSEN - ROBERTSON Structural & Civil Engineers

PROJECT THE WORLD TRADE CENTER | TITLE SCHEDULE FOR DETAIL P10A, P11A, B, C, P12A & B, P13A | DATE 9-1-67

REVISIONS

1-10-68
2-19-68

Ref. Dwgs.	1-AB3-60 & 60.1	1-AB3-60 & 60.1	1-AB3-60 & 60.1	1-AB3-60 & 60.1	1-AB3-60 & 60.1	1-AB3-60.1 & 60.5
	P10A	P11A & P11B	P11C	P12A & B	P13A	P10B
PLATE						
P	1/2"	9/16"	1/2"	9/16"	9/16"	1/2"
Q	1/2"	9/16"	1/2"	9/16"	9/16"	1/2"
DIMENSION						
A	1'-3"	1'-0"	1'-1"	0'-10"	0'-10"	1'-0"
B	8"	6"	6"	5"	5"	6"
X	1'-9"	6"	6"	6"	6"	11"
C	1 3/4"	1 3/4"	1 3/4"	2 3/4"	2 3/4"	1 3/4"
D	—	—	—	—	—	—
BEAM SIZE	14WF30	21B49	21B49	21WF96	21WF96	16WF36
WELD						
1	5/16	5/16	5/16	5/16	5/16	5/16
2	5/16	5/16	5/16	5/16	5/16	5/16

LICENSED PROFESSIONAL ENGINEER LESLIE E. RO... UNIVERSITY OF T... No. ...

1-AB3-60.2

SKILLING - HELLE - CHRISTIANSEN - ROBERTSON Structural & Civil Engineers

PROJECT THE WORLD TRADE CENTER | TITLE SCHEDULE FOR DETAIL P20A, P20B, P20C | DATE 7-10-68

REVISIONS

2-19-68

Ref. Dwgs.	1-AB3-60.1 & 61	1-AB3-60.1 & 60	1-AB3-60.1 & 63	1-AB3-61	1-AB3-61
	P20A	P20B	P20C	P20D	P20E
PLATE					
P	½"	½"	½"	½"	1"
Q	½"	½"	½"	½"	1"
DIMENSION					
A	1'-3"	1'-0"	1'-1"	1'-2"	1'-10"
B	8"	7"	7"	7"	9"
X	1'-3¼"	0'-11"	0'-9"	1'-3"	1'-11"
C	1¾"	1¾"	1¾"	1¾"	2¾"
D	—	—	—	—	—
E					2'-2"
BEAM SIZE	14 WF 34	16 WF 36	16 WF 36	18 WF 50	—
WELD					
1	5/16	5/16	5/16	5/16	½
2	5/16	5/16	5/16	5/16	½

LICENSED PROFESSIONAL ENGINEER LESLIE E. ROBERTSON No. 34360 STATE OF NEW YORK

1-AB3-60.4

SKILLING - HELLE - CHRISTIANSEN - ROBERTSON Structural & Civil Engineers

PROJECT THE WORLD TRADE CENTER | TITLE BEAM CONNECTION DETAIL P10B-D & P11E (V) | DATE 2-19-68

REVISIONS

12-18-68

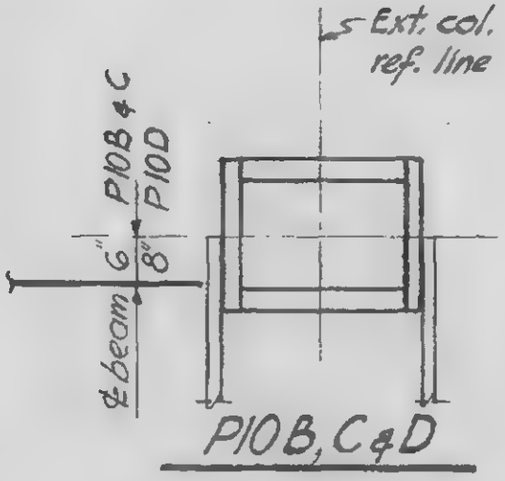

P10B, C & D

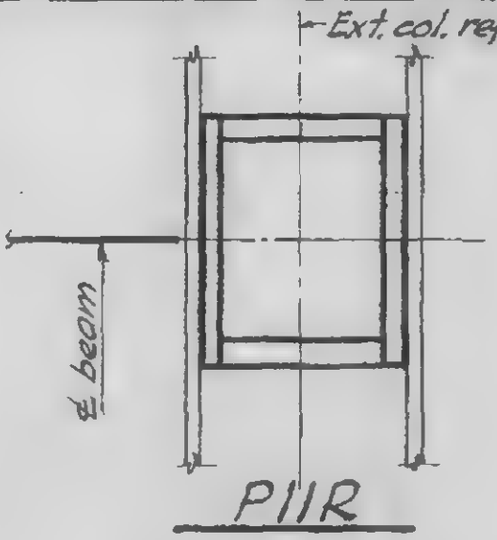

P11R

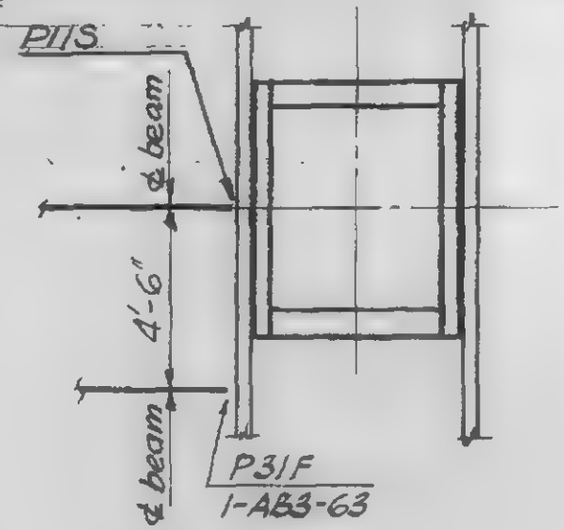

P11S

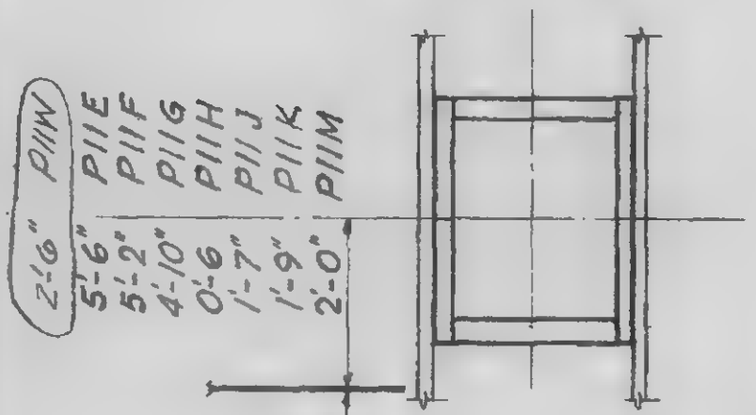

P11E-P11M & P11W

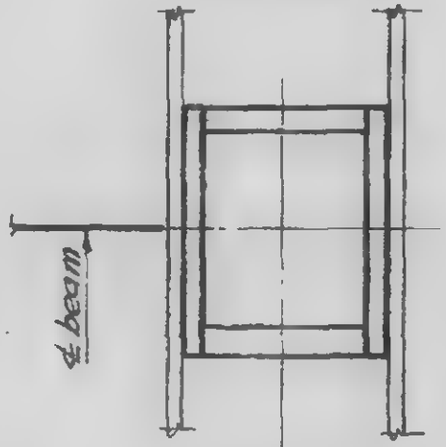

P11T

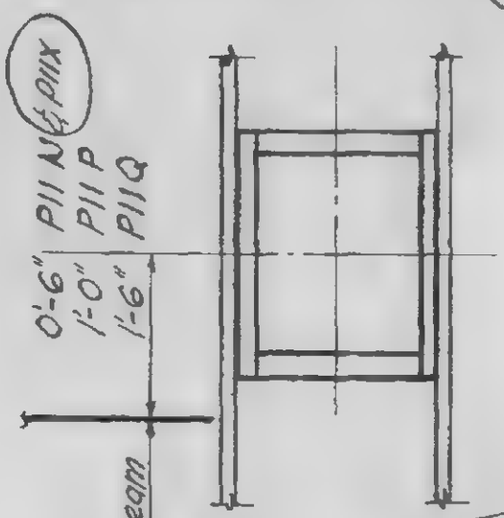

P11N-P11Q & P11X

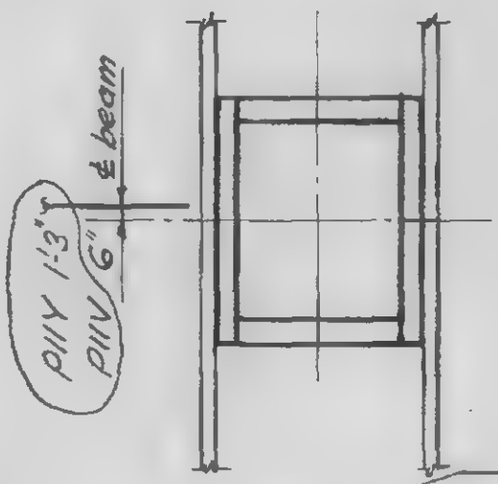

P11V & P11Y

Note:
1. See schedule on 1-AB3-60.2 & 60.6 & 60.9

1-AB3-60.5

LICENSED PROFESSIONAL ENGINEER
LESLIE E. ROBERTSON
No. 34360
UNIVERSITY OF THE STATE OF N.Y.

SKILLING - HELLE - CHRISTIANSEN - ROBERTSON Structural & Civil Engineers

PROJECT THE WORLD TRADE CENTER | TITLE SCHEDULE FOR DETAIL P11W-Y | DATE 12-18-68

REVISIONS

Ref. Dwg.	1-AB3-60.1 & 60.5	1-AB3-60.1 & 60.5				
	P11W & Y	P11X				
PLATE						
P	1/2"	3/4"				
Q	1/2"	3/4"				
DIMENSION						
A	1'-0"	1'-2"				
B	6"	6"				
X	11"	11"				
C	1 3/4"	2 3/4"				
D	—	—				
E	—	—				
BEAM SIZE	16WF36	16WF58				
WELD						
1	5/16	3/8				
2	5/16	3/8				

LICENSED PROFESSIONAL ENGINEER
LESLIE E. ROBERTSON
No. 34360
UNIVERSITY OF THE STATE OF NEW YORK

1-AB3-60.9

SKILLING - HELLE - CHRISTIANSEN - ROBERTSON Structural & Civil Engineers

PROJECT THE WORLD TRADE CENTER | TITLE CONNECTION DETAIL P20A-P20E | DATE 9-1-67

REVISIONS
1-10-68
2-19-68

Note: 1) For P20B see P13A (1-AB3-60)
2) For P20C see P30A (1-AB3-63)

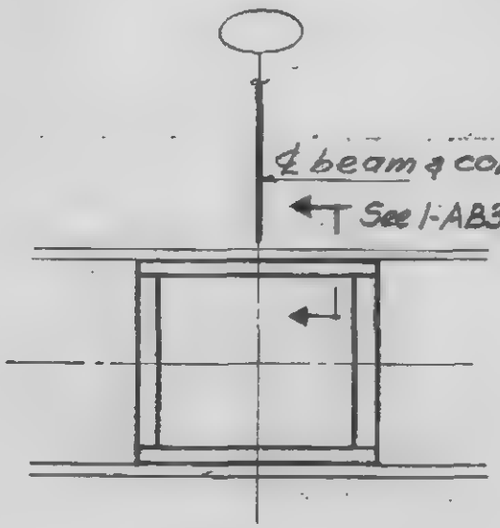

P20A

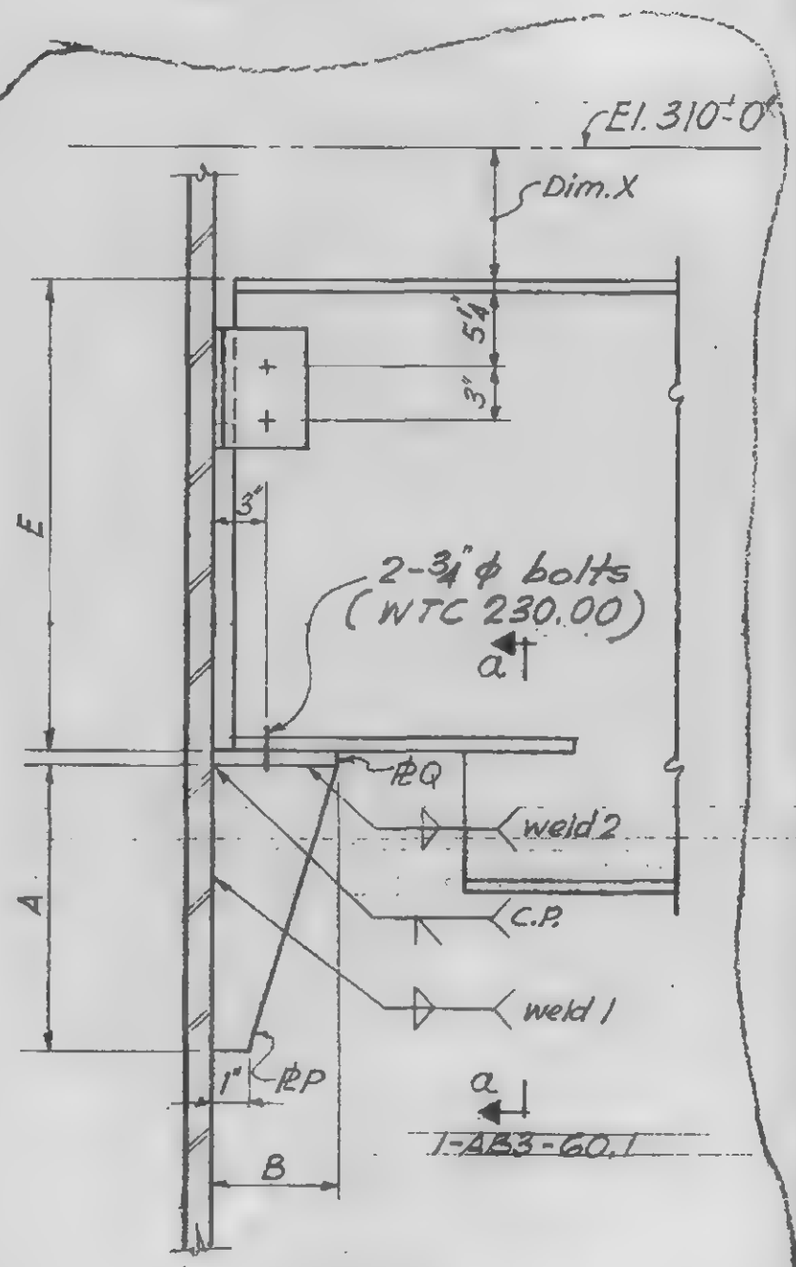

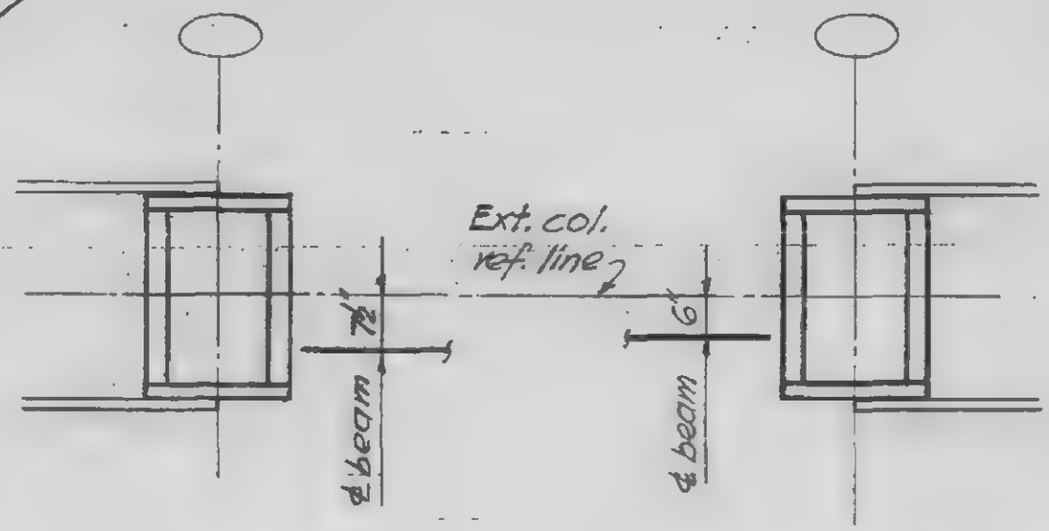

P20D P20E

P20D & E

LICENSED PROFESSIONAL ENGINEER
LESLIE E. ROBERTSON
No. 34360
UNIVERSITY OF THE STATE OF NEW YORK

1-AB3-61

SKILLING - HELLE - CHRISTIANSEN - ROBERTSON — Structural & Civil Engineers

PROJECT THE WORLD TRADE CENTER | TITLE CONNECTION DETAIL P21, P22, P23, P24, P25 + P26 | DATE 9-1-67

REVISIONS
1-10-68

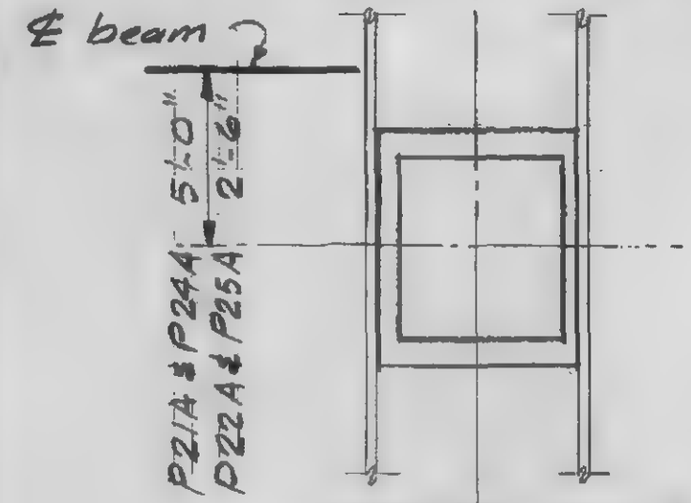

P21A, P22A, P24A, P25A

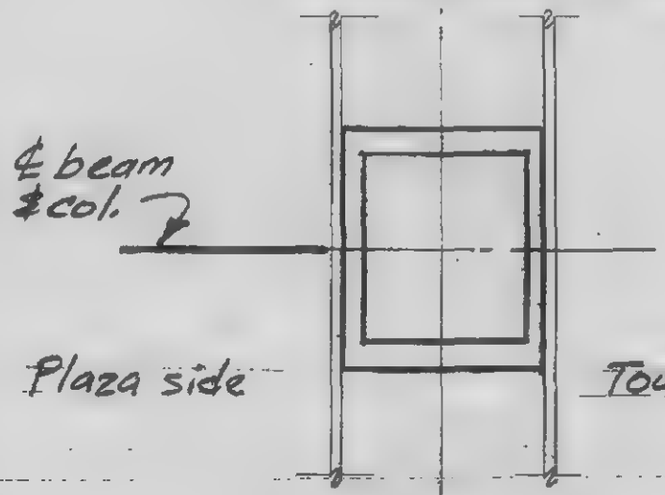

P22B, P26A

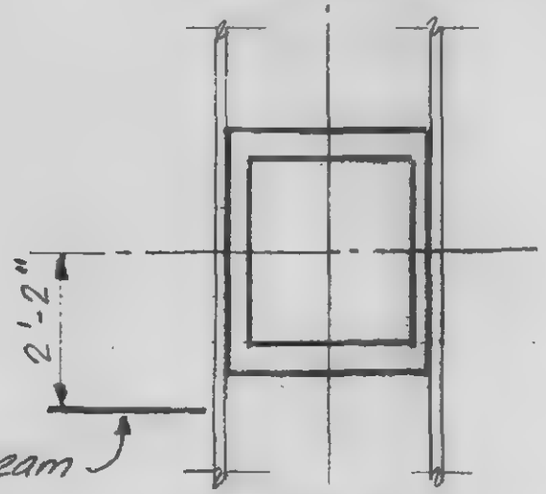

P23A

SCHEDULE	
	DIM. X
P21A	2'-7"
P22A	2'-1"
P22B	2'-1"
P23A	2'-1"
P24A	1'-11"
P25A	1'-11"
P26A	1'-9"

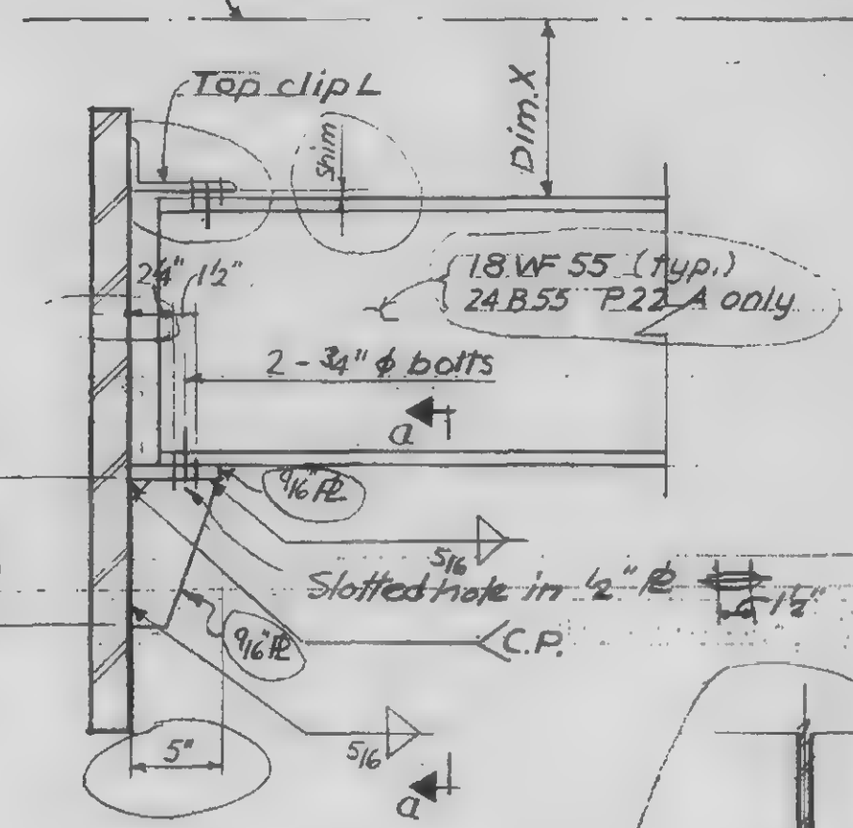

Elevation

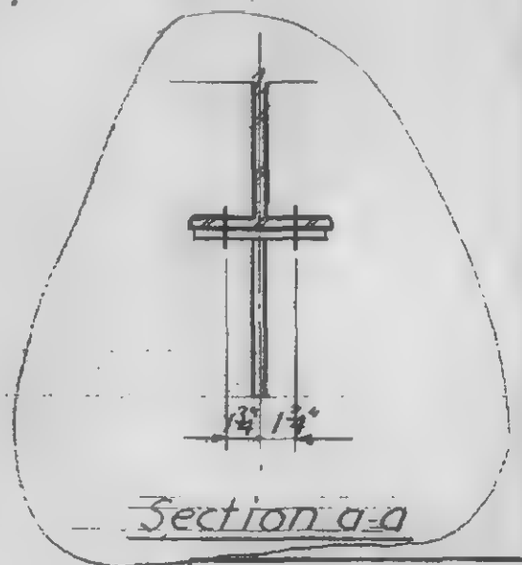

Section a-a

1-AB3-62

LICENSED PROFESSIONAL ENGINEER
LESLIE E. ROBERTSON
No. 34360
UNIVERSITY OF THE STATE OF NEW YORK

SKILLING - HELLE - CHRISTIANSEN - ROBERTSON — Structural & Civil Engineers

PROJECT: THE WORLD TRADE CENTER | TITLE: CONNECTION DETAIL P30 & P31 | DATE: 9-1-67

REVISIONS
1-10-68
2-19-68

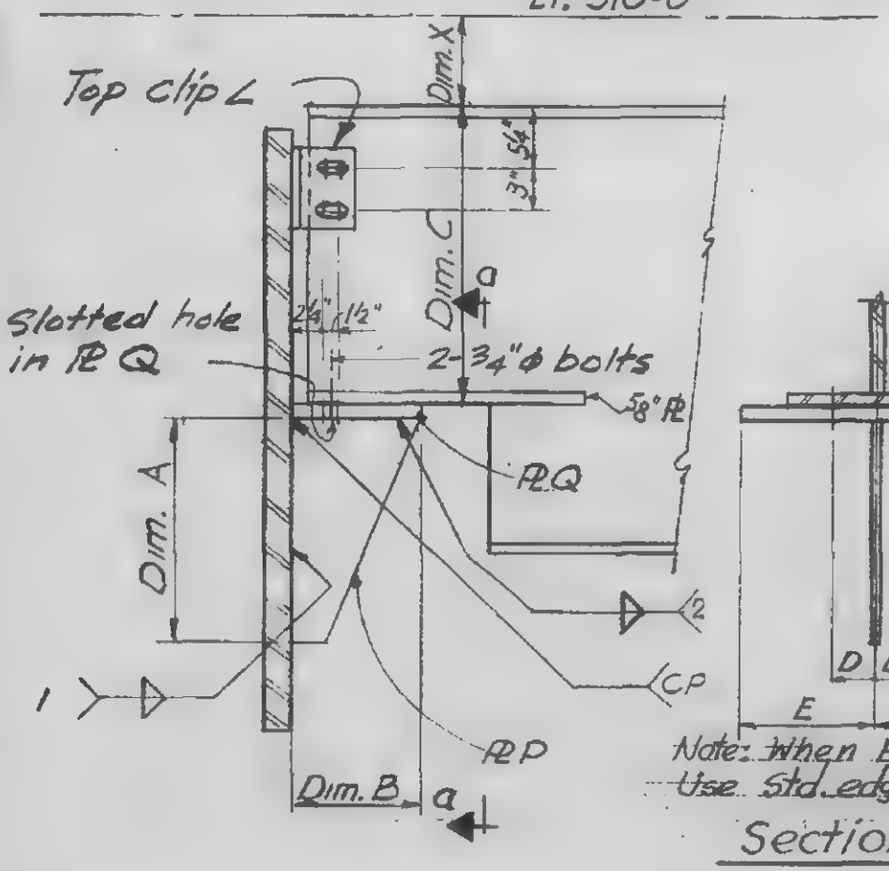

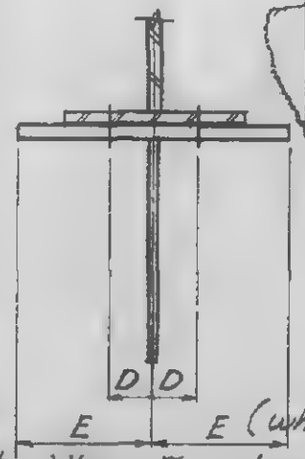

Note: When E not sch. Use Std. edge distance

Section a-a

DIM. E	Detail	Plate P	Plate Q	Dimensions A	B	C	X	Welds 1	Welds 2	DIM. D
—	P30 A	¾"	¾"	1'-7"	8"	1'-8"	9"	⅜	⅜	2¾"
—	P31 A,B,	¾"	¾"	1'-6"	9"	1'-8"	9"	½	½	2¾"
9"	P31 C,D	¾"	¾"	1'-8"	10"	1'-8"	9"	½	½	2¾"
9"	P31 E	15/16"	15/16"	1'-8"	8"	1'-8"	9"	⅜	⅜	2¾"
—	P31 F,G P30 C	¾"	¾"	1'-6"	9"	1'-3⅞"	11"	½	½	2¾"
9"	P30 B	1⅛"	1⅛"	1'-10⅞"	9"	1'-10"	1'-11"	⅝	½	2¾"
—	P31 H	¾"	¾	1'-6"	8"	2'-0"	11"	⅜	⅜	2¾"

For plan P31F See 1-AB3-60.5

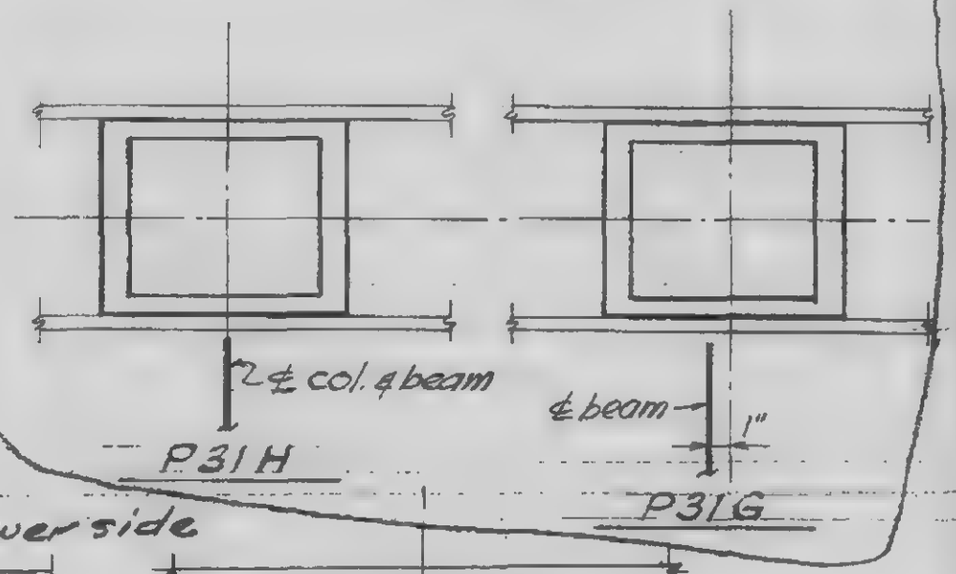

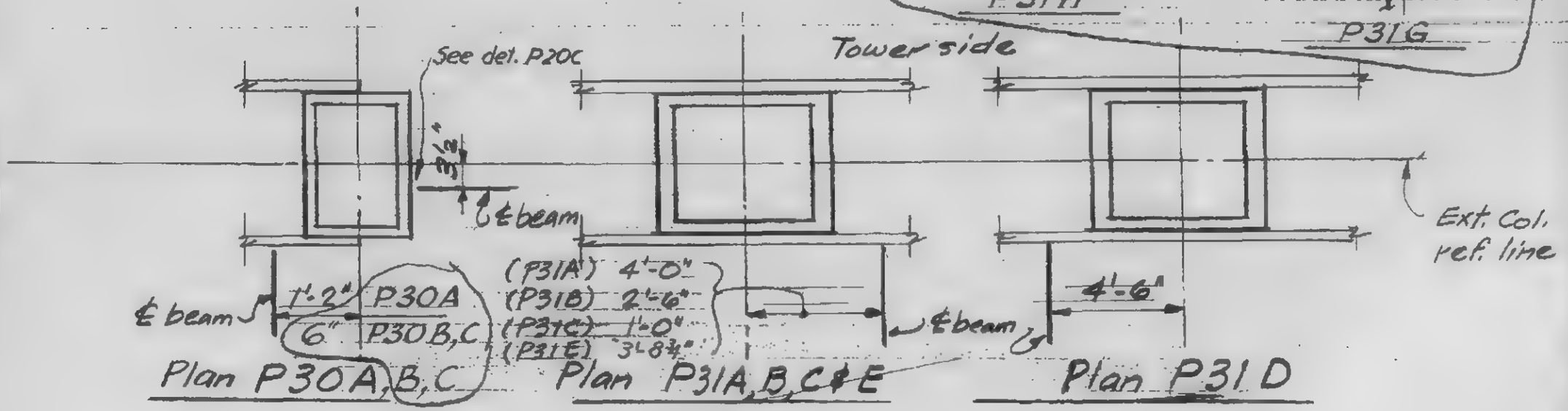

LICENSED PROFESSIONAL ENGINEER — LESLIE E. ROBERTSON — No. 34360 — UNIVERSITY OF THE STATE OF NEW YORK

1-AB3-63

SKILLING - HELLE - CHRISTIANSEN - ROBERTSON — Structural & Civil Engineers

PROJECT: THE WORLD TRADE CENTER | TITLE: CONNECTION DETAIL P35A | DATE: 9-1-67

REVISIONS

1-10-68

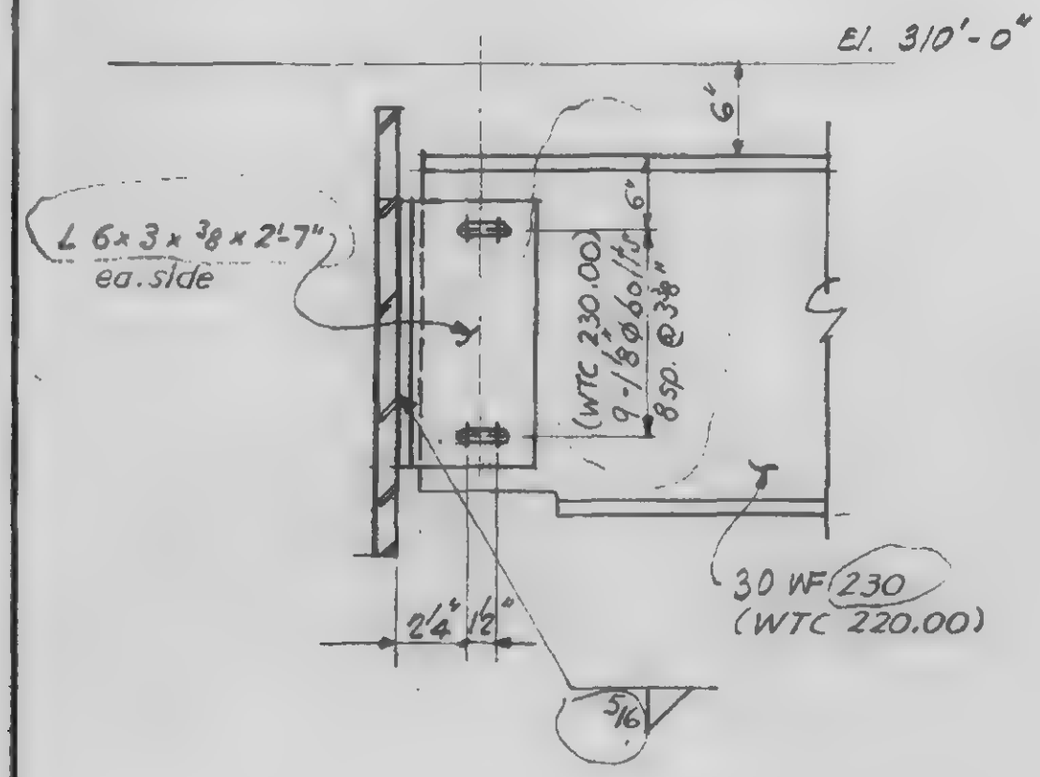

Section a-a

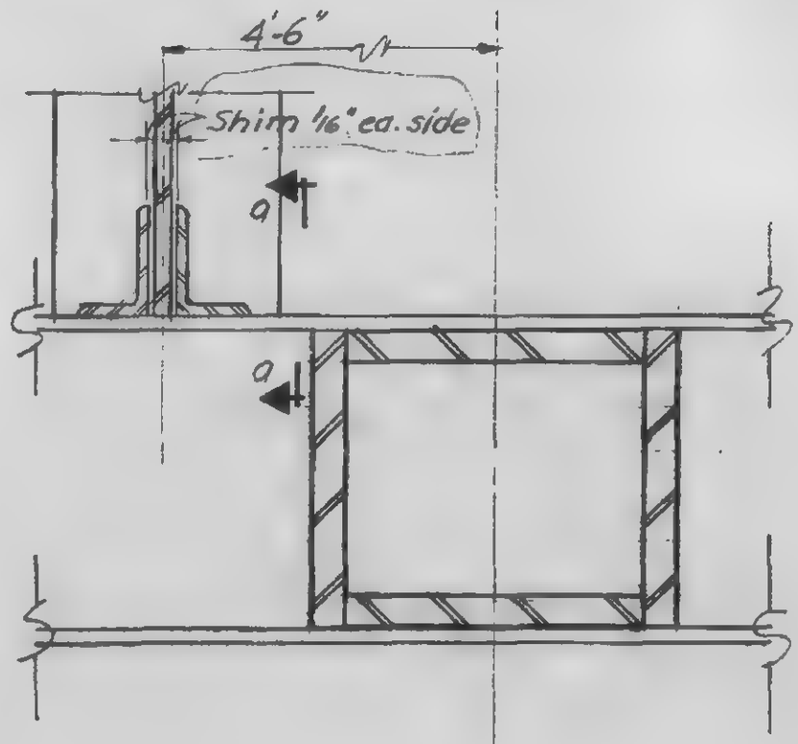

PLAN

LICENSED PROFESSIONAL ENGINEER
LESLIE E. ROBERTSON
No. 34360
STATE OF THE STATE OF NEW YORK

1-AB3-64

SKILLING - HELLE - CHRISTIANSEN - ROBERTSON — Structural & Civil Engineers

PROJECT THE WORLD TRADE CENTER | TITLE CONNECTION DETAIL P40A-K & P41 A & D | DATE 9-1-67

REVISIONS

2-19-68

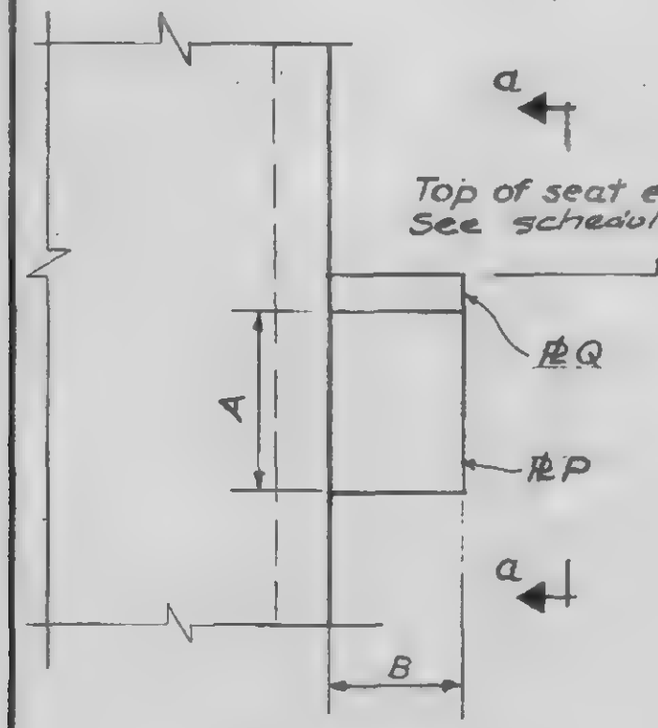

Elevation

Details P40A-K & P41A, C & D

(Beam on ℄ of col.)

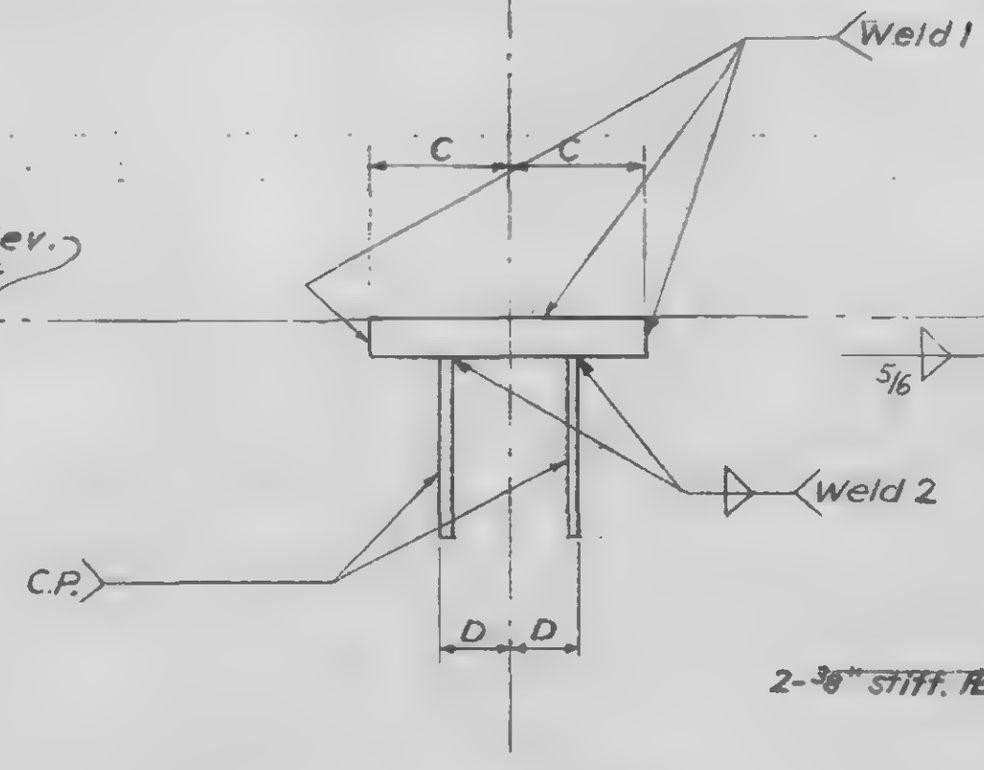

Section a-a

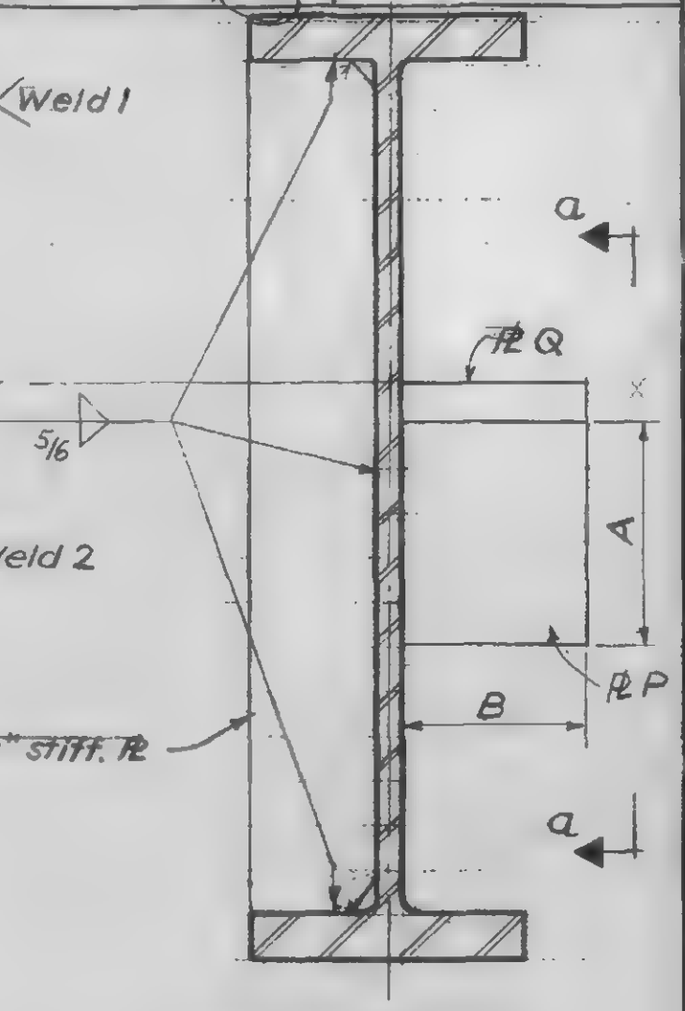

Elevation

Detail P41B

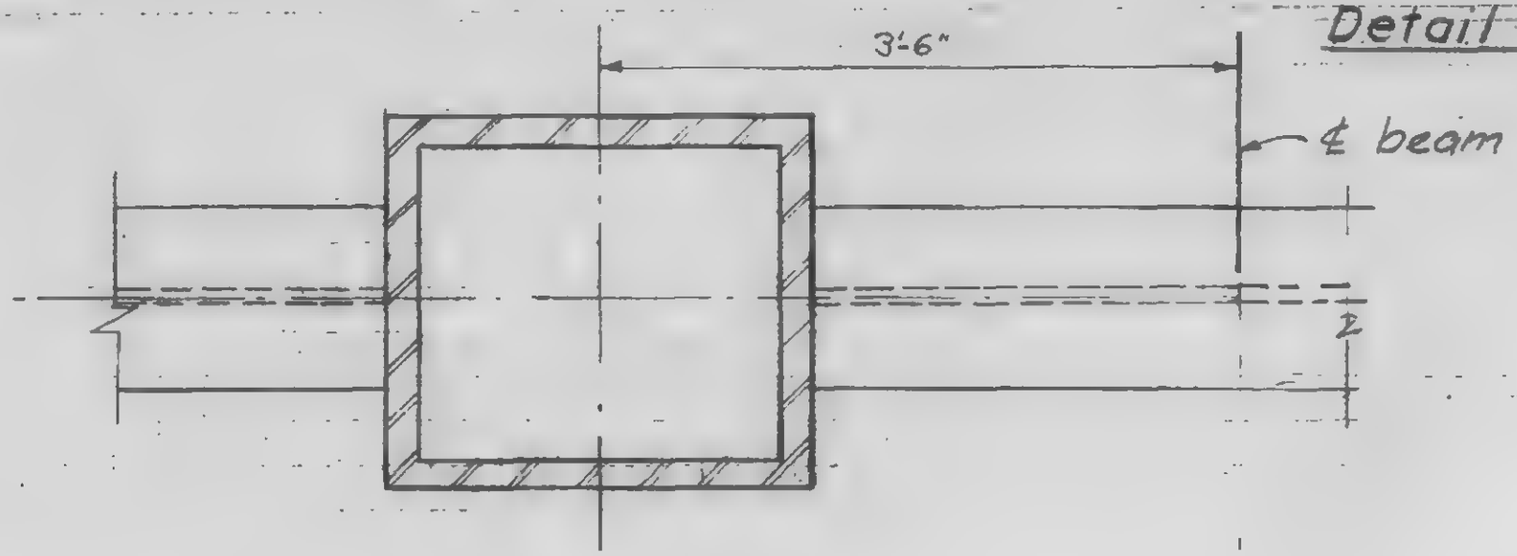

Plan

Detail P41B

LICENSED PROFESSIONAL ENGINEER
LESLIE E. ROBERTSON
No. 34360
UNIVERSITY OF THE STATE OF NEW YORK

1-AB3-65

SKILLING - HELLE - CHRISTIANSEN - ROBERTSON Structural & Civil Engineers

PROJECT THE WORLD TRADE CENTER | TITLE SCHEDULE FOR DETAIL P40 A - F | DATE 9-1-67

REVISIONS

2-19-68

Ref. Dwg. See 1-AB3-65

	P40 A	P40 B	P40 C	P40 D	P40 E	P40 F
PLATES						
P	3/8"	3/8"	3/8"	3/8"	3/8"	3/8" X
Q	1 1/16"	1 1/16"	1 1/16"	1 1/16"	1 1/16"	1 1/16"
DIMENSIONS						
A	4"	4"	4"	4"	4"	4"
B	5"	5"	5"	5"	5"	5"
C	5"	5"	5"	5"	5"	5"
D	2 1/2"	2 1/2"	2 1/2"	2 1/2"	2 1/2"	2 1/2"
WELDS						
1	1/2	1/2	1/2	1/2	1/2	1/2
2	5/16	5/16	5/16	5/16	5/16	5/16
TOP OF SEAT ELEVATION	311' - 8 1/2"	313' - 1"	317' - 2 1/2"	318' - 7"	322' - 8 1/2"	324' - 1"

LICENSED PROFESSIONAL ENGINEER LESLIE E. ROBERTSON No. 34360 UNIVERSITY OF THE STATE OF NEW YORK

1 - AB3 - 65.1

SKILLING - HELLE - CHRISTIANSEN - ROBERTSON Structural & Civil Engineers

PROJECT THE WORLD TRADE CENTER | TITLE SCHEDULE FOR DETAIL P40 G, H & J, P41 A & B | DATE 9-1-67

REVISIONS

2-19-68

Ref. Dwg. See 1-AB3-65

	P40 G	P40 H	P40 J	P40 K	P41 A	P41 B
PLATES						
P	3/8"	1/2"	1/2"	1/2"	1/2"	1/2"
Q	1 1/16"	1 3/4"	1 3/4"	1 3/4"	1 3/4"	1 3/4" X
DIMENSIONS						
A	4"	6 1/2"	8"	9"	8"	10"
B	5"	5 1/2"	6 1/2"	6 1/2"	6"	8"
C	5"	6"	6"	6"	6"	7"
D	2 1/2"	3 1/4"	3"	3"	3"	2 1/2"
WELDS						
1	1/2	1/2	1/2	1/2	1/2	1/2
2	5/16	3/8	3/8	3/8	3/8	3/8
TOP OF SEAT						
ELEVATION	328'-2 1/2"	329'-0 1/4"	328'-3 1/8"	329'-0 1/2"	329'-3"	329'-1"

LICENSED PROFESSIONAL ENGINEER LESLIE E. ROBERTSON No. 34360 UNIVERSITY OF THE STATE OF NEW YORK

1-AB3-65.2

SKILLING - HELLE - CHRISTIANSEN - ROBERTSON Structural & Civil Engineers

PROJECT THE WORLD TRADE CENTER | TITLE SCHEDULE FOR DETAIL P41C & D | DATE 2-19-68

REVISIONS

Ref. Dwg	See 1-AB3-65					
	P41C	P41D				
PLATES						
P	1/2"	1/2"				
Q	1 3/4"	1 3/4"				X
DIMENSIONS						
A	6 1/2"	8"				
B	5 1/2"	6 1/2"				
C	6"	6"				
D	3 1/4"	3"				
WELDS						
1	1/2"	1/2"				
2	3/8"	3/8"				
TOP OF SEAT ELEVATION	329'-3 5/8"	328'-5 3/4"				

LICENSED PROFESSIONAL ENGINEER
LESLIE E. ROBERTSON
No. 34360
UNIVERSITY OF THE STATE OF NEW YORK

1-AB3-65.3

SKILLING - HELLE - CHRISTIANSEN - ROBERTSON Structural & Civil Engineers

PROJECT THE WORLD TRADE CENTER | TITLE DETAIL P42 A.B.C.D.E.& F | DATE 9-1-1967

REVISIONS

2-19-68

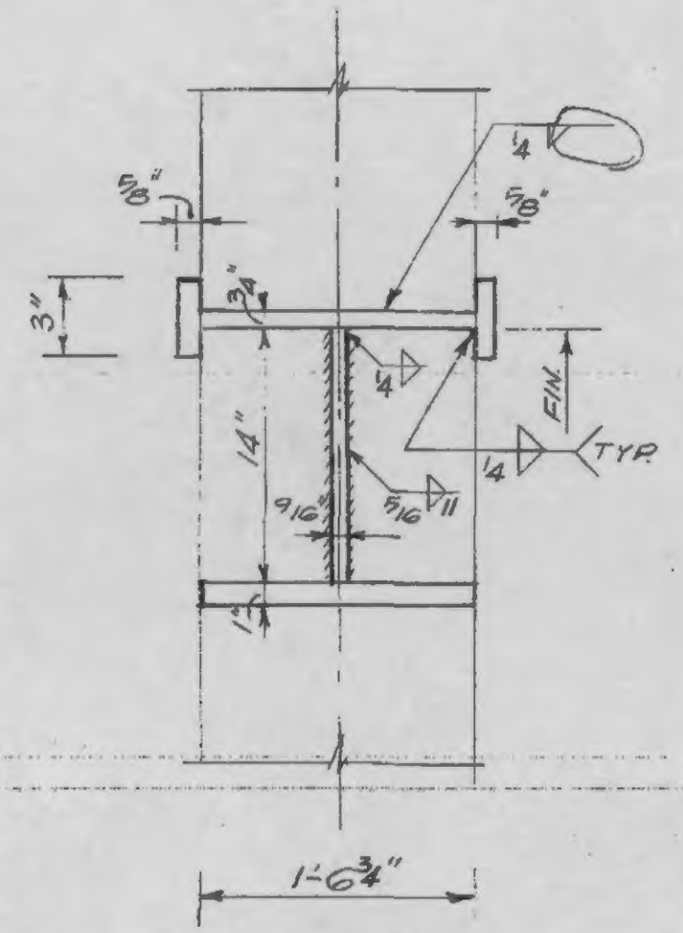

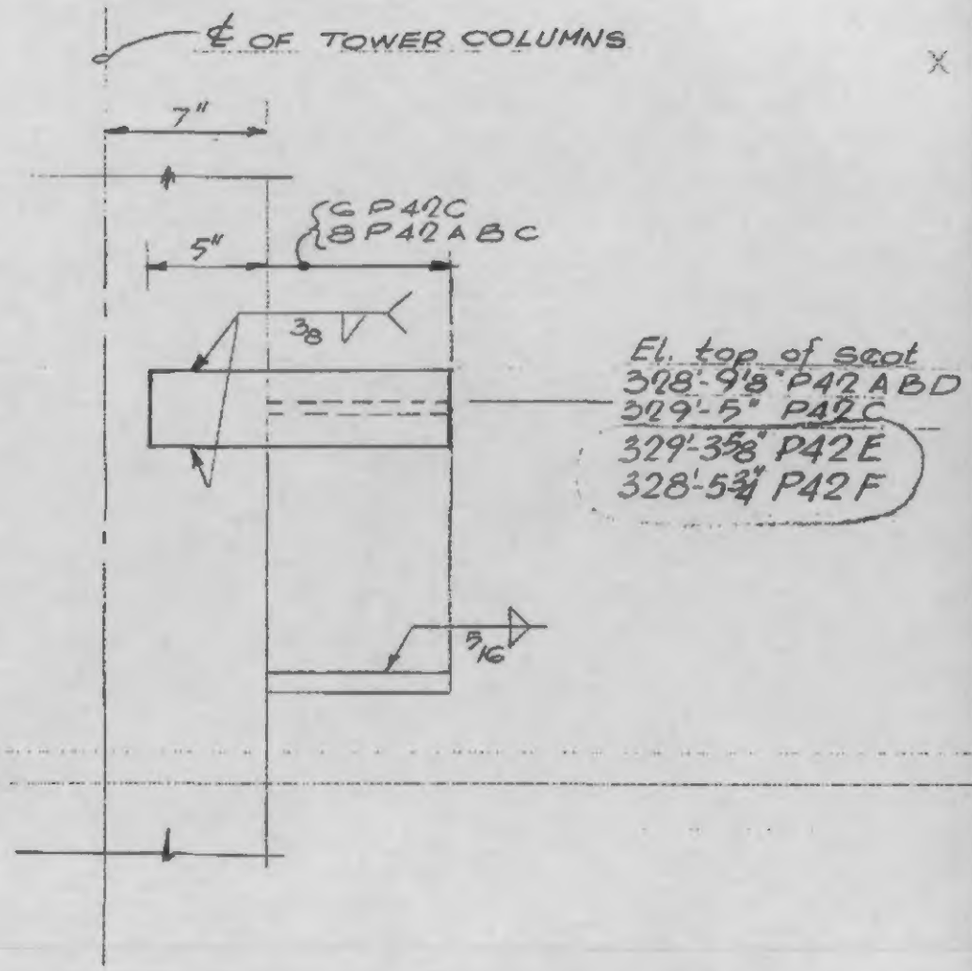

LICENSED PROFESSIONAL ENGINEER
LESLIE E. ROBERTSON
No. 34360
THE STATE OF NEW YORK

1-AB3-66